CONTACTS

VAL SPRAY BERGAMO s.r.l., is the leading company from Italy in the painting and sanblasting industry. In this price list we offer wide range of equipment suitable to solve all your spraying challenges. The product availability of superior quality for the best price is a result of twenty years of experiences and research in the sector.

In addition to a remarkable range of products you can find in this catalogue, we also supply compatible accessories for any type of equipment on the market thanks to our production facility. Our technicians and sales offices are at your complete disposal for any request and any type of requirements. You can find our team at our headquarters in Brembate di Sopra (BG) at the following addresses:

Telephone: +39 035.4376196
Fax: +39 035.6222719

Website: www.valspray.it
E-mail: info@valspray.it
Administration: amministrazione@valspray.it
Orders and enquiries: estero@valspray.it

CEO: Beretta Fabrizio +39 335.6556271







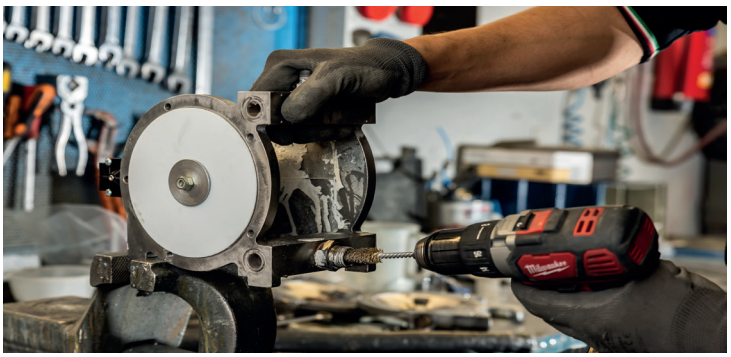

OUR FAMILY

2000

SQUARE METERS OF WHAREHOUSE WITH GOODS ALWAYS IN STOCK TO SATISFY YOUR NEEDS IN THE SHORTEST POSSIBLE TIMEE




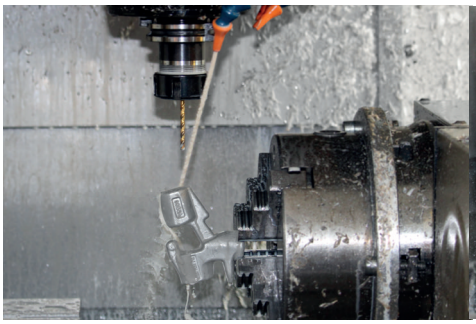


1800

PRODUCTION HOURS WORKED FOR YEAR TO CREATE THE BEST PRODUCTS ON THE MARKET

+70

DAILY SHIPMENTS IN ITALY AND AROUND THE WORLD WITH EXPRESS DELIVERY







+6000

CUSTOM MADE EQUIPMENT AND ACCESORIES FROM OUR PRODUCTION

2000

PARTNER IN ITALY AND IN THE WORLD TO BE ALWAYS READY WHEREVER YOU ARE


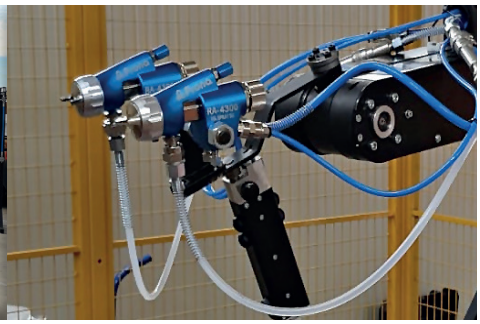




+250

TRADE FAIRS OVER YEARS TO PRESENT OUR INNOVATION AND NOVELETIES

GENERAL CONDITIONS OF SALE

ORDERS ARE ACCEPTED EXCLUSIVELY USING THE FOLLOWING CONDITIONS:

PRICES
Are ex-work our premises in Brembate di Sopra (BG) - Italy.
Packing to be carried at cost.

PAYMENTS
Must be made within the deadline.
Are not recognized as valid the payments made to people not authorized by us. Cheques should be struck and made payable to VAL SPRAY BERGAMO SRL “not transferable”
even if the check is delivered directly to our agents. We do not accept discounts, rebates or rounding if not agreed in advance by writing. Any disputes are not eligible for suspension of payments. Bank interests are charged if payment are not made in time.Discounts for prompt cash payment may be agreed and it should be calculated on the net amount of goods excluding taxes and transport packaging.

SHIPPING
The goods travel at risk and peril even if sold free of carriage. Wether the order does not indicate the means of delivery this will be decided by the company with the means consider the most appropriate without assuming any responsibility.

DELIVERIES
The terms of delivery stated in our offers are subject to prior sale and must always mean however,
no commitment. Orders are processed according to availability of stock without guarantee of payment. Any order of only parts of value less will be made in pre-payment.

RETURN OF GOODS
Returned goods will only be accepted prior written agreement with our sales office and sent to our
office in Brembate di Sopra (BG).

WARRANTY
We are committed to the replacement or credit of the defective items only if due to problems in
production or defecting, damaged caused to wear parts will not be covered.

COMPLAINTS
For any shortages or defects in the quantities we must received notice within 8 days of shipment of goods.

COST
Price increases will be applied, if necessary, in response to the possible increases of raw materials, wages or costs of the production

DISPUTE
Any dispute is referred to the court of Bergamo - Italy.

UPDATES
The size and characteristics of the items described in this catalog are not binding and may be
changed at any time without notice.

ATTENTION
ALL RIGHTS RESERVED
THE REPRODUCTION OF THIS FORM is forbidden WITHOUT
EXPRESS WRITTEN PERMISSION OF THE VAL SPRAY BERGAMO SRL

INDEX

ABRASIVE PAPERS 219
ACCESSORIES FOR GLUES 94-98
ACCESSORIES FOR SPRAY GUNS 209
ADAPTORS AND LOW PRESSURE VALVES 286
AGITATORS MOUNTED ON COVER 83
AGITATORS MOUNTED ON SUPPORT 79-80
AIRBRUSH 204
AIR DRILLS AND MIXER RODS 82
AIRLESS MEMBRANE PUMPS 126-130
AIRLESS PISTON PUMP 8-29
AIRLESS PISTON PUMPS 132-136
AIRLESS TIP GUARDS 249
AIRLESS TIP SIZES 251
AIR MOTOR KIT VAL SPRAY 276
AIR PRESSURE GAUGES 284
AIR REGULATOR AND LUBRICATOR 213
AUTOMATIC AIRLESS SPRAY GUNS 226-227
AUTOMATIC SHAKER 72
AUTOMATIC SPRAY GUNS 201
BELLOW PUMP 36
BI-COMPONENT BELLOW PUMP 37
BLASTING ACCESSORIES 317-326
BLASTING HELMETS 327
BLAST NOZZLES 315-316
CAN CRUSHER 76
CARDING MACHINES FOR BLOWING 143
CATALYST CONTAINER 109
COMPATIBLE PUMPING GASKET 267
COMPATIBLE PUMPING GASKET GRACO 270
COMPATIBLE PUMPING GASKET KIT 269
COMPATIBLE PUMPING GASKETS 268
COMPATIBLE SPARE PARTS GRACO 271
COMPATIBLE SPARE PARTS TITAN 272
COMPATIBLE SPARE PARTS TITAN 273
COMPATIBLE SPARE PARTS WAGNER 273
COMPRESSORS 117
CUPS FOR SPRAY GUNS 207-208
DISPLAYS 217
DISPOSABLE CUPS 205-206
DOUBLE FITTED HOSES 295
DOUBLE METALLIC BRAID FITTED HOSES 291
DOUBLE MIX FITTED HOSES 295
DRYING TROLLEY AND CART 225
ELECTRIC AGITATORS 77-78
ELECTRIC SPRAY GUN 150
ELECTROSTATIC GROUP 38-40
EXTENDED SPRAY GUNS AUTOMATIC NOZZLE 203
EXTENSIONS, JUNCTION AND ROLLERS 252
EXTENSIONS, JUNCTION AND ROLLERS 253
EXTRUSION PUMP ACCESSORIES 33
EXTRUSION PUMPS 31-32
FILTERING AND PAINT PREPARATION 210
FITTINGS FOR BLASTING 318-321
FITTINGS FOR HIGH PRESSURE HOSE 302
FITTINGS FOR PTFE HOSES 301
FITTINGS FOR SUCTION SYSTEM 303
FITTINGS: LOW PRESSURE 309-312
GRACO NOZZLES AND AIR CAPS 241
GUN FILTERS 259
GUNS AND ACCESSORIES EXPLODED VIEW 328
GYROSCOPIC MIXER 71
HEADS FOR AIRLESS MEMBRANE PUMPS 282
HEATED HOSE 113
HEATING BANDS 114
HIGH PRESSURE FITTINGS 305-307
HIGH PRESSURE HOSES 288
HIGH PRESSURE VALVES 279
HOSES: LOW PRESSURE 293
IMPREGNATING PUMP 56
INDEX 4
IONIZING GROUP 76
KREMLIN TYPE GASKETS AND O-RINGS 245
KREMLIN TYPE MIX SPARE PARTS 246
KREMLIN TYPE NOZZLES AND AIR CAPS 244
LED DRYING LAMPS 218
LINE FILTERS 255-256
LINE STRIPERS 137-138
LOW PRESSURE FITTINGS 308
LOW PRESSURE HOSES 294-296
LOW PRESSURE MEMBRANE PUMP 57-69
MAINTENANCE ACCESSORIES 277
MANIFOLD FILTERS 260-262
MANUAL AIRLESS SPRAY GUN 228-231
MANUAL GUN TWO COMPONENTS 232

MANUAL PNEUMATIC AGITATORS 82
MANUAL SPRAY GUNS - EXTENDED NOZZLE 195
MEMBRANES AND CARTS 266
MEMBRANE TRANSFER PUMPS 54-55
MINI SANDBLASTER ACCESORIES 124
MINI SANDBLASTERS 123
MINI SPRAY GUNS LOW PRESSURE UPPER CUP 171
MIXER KIT, SILICA GEL AND SPHERES 112
MIXERS 153
MIXING AND CATALYST HOSES 111
MIX NOZZLES 239
MIX SPRAY GUN 233
MIX SPRAY GUNS 234
NON-RETURN VALVE 280
OPTIMA TYPE NOZZLES AND AIR CAPS 240
ORBITAL SANDERS 219
OVERSIZED DOUBLE HOSE FOR 294
PAINT BOOTH FILTERS 220-224
PAINT CAN HOLDER AND NEBULIZER 217
PAINT CONTAINERS 110
PAINT FILTERING GROUP 87
PAINTING MASK 214-215
PAINTING SYSTEMS MOUNTED ON COVER 85
PAINT SPRAY GUNS FOR THE CAR INDUSTRY 172-174
PERISTALTIC PUMP 140
PISTONS GRINDING 277
PLASTER GUNS 148
PLASTER MIXER 140
PLASTER MIXER AND SPRAYER 142
PLASTER SPRAYING MACHINE 141
PNEUMATIC AGITATORS 81
PNEUMATIC GLUE FEEDERS 92
PNEUMATIC GLUE FEEDERS 93
PRESSURE GAUGES FOR LIQUID 283
PRESSURE REGULATORS 254
PRESSURE TANKS 99-108
PRESSURE WASHERS 157-160
PRESSURE WASHERS ACCESSORIES 161
PUMP FOR WALL COVERINGS 146
PUMPING AND REPAIR KIT VAL SPRAY 274
PUMPING AND REPAIR KIT VAL SPRAY 275
PUMPS EXPLODED VIEW 402
REVERSIBLE TIPS AND GUARDS 247
ROTORS AND STATORS 144
SANDBLASTER WITH EQUIPMENT 121
SANDBLASTER WITHOUT EQUIPMENT 120
SANDBLASTING CABINS 122
SANDER 155
SCALES 76
SINGLE METALLIC BRAID FITTED HOSES 289-292
SINGLE METALLIC BRAID FITTED HOSES 290
SINGLE TEXTILE BRAID FITTED HOSES 292
SINGLE TEXTILE BRAID GRACO HOSE FOR AIRLESS 288
SINGLE TEXTILE BRAID HOSE 288
SINGLE TEXTILE BRAID HOSE TYPE GRACO 288
SOLVENT REGENERATOR 73
SPARE PARTS FOR HP MEMBRANE PUMPS 278
SPRAY GUNS AUTOMATIC LOW PRESSURE 192-202
SPRAY GUNS KIT BOX 175-177
SPRAY GUNS LOW PRESSURE 185-189
SPRAY GUNS LOW PRESSURE KIT BOXES 178
SPRAY GUNS LOW PRESSURE SUCTION CUP 179-184
SPRAY GUNS LOW PRESSURE UPPER CUP 163-165
SPRAY GUNS MIX AUTOMATIC 238
SPRAY GUNS MIX MANUAL 235-237
SPRAY GUNS TWO COMPONENTS LOW PRESSURE 193-194
SPRAY GUN WASHER 74-75
SUCTION FILTER 264-265
SUCTION HOSE: GALVANIZED 299
SUCTION HOSE: STAINLESS STEEL 300
SUCTION HOSE: STAINLESS STEEL 301
SUCTION SYSTEM ASSEMBLY: GALVANIZED 297
SUCTION SYSTEM ASSEMBLY: STAINLESS STEEL 298
SWIVEL FITTING 281
TANK COVERS 82
TANKS AND SIEVES 285
THICKNESS GAUGE AND SPECTROCOLORMETER 211
TIP FILTERS 263
TIP FILTERS KREMLIN TYPE 262
TIPS SIZES 250
TOOLS AND AIR GUNS FOR WORKSHOP 216
TRANSFER PUMPS 34-35
TRANSFER SYSTEMS FOR BARRELS 86-87
TROWEL 154
TURBINE HVLP 151-152
TURBINES FOR PIPE BLASTING 314
TWO-COMPONENT PUMP 42-48
VACUUM CLEANERS 156
WAGNER TYPE NOZZLES AND AIR CAPS 242
WAGNER TYPE NOZZLES AND AIR CAPS 243

WALL INJECTION PUMPS 145-147
WALL JOINTS SPRAY MACHINES 141
WATER AND SOLVENT BASED PAINTS 294
WORKSHOP ACCESSORIES 212

PUMPS AND SYSTEMS FOR INDUSTRIAL PAINTING



COLOR DOSING SYSTEMS
WITH CATALYSTS AND MIXERS

EQUIPPMENT FOR THE WOOD,
PLASTIC, GLASS, METAL,
NAVAL, TANNERY, CERAMICS
INDUSTRY AND MUCH MORE





LOW, MEDIUM AND HIGH
PRESSURE PUMPS WITH THE
POSSIBILITY OF COMPLETE
KITS READY FOR USE

TAILOR-MADE SYSTEMS
CUSTOMIZED TO THE
CUSTOMER'S NEEDS



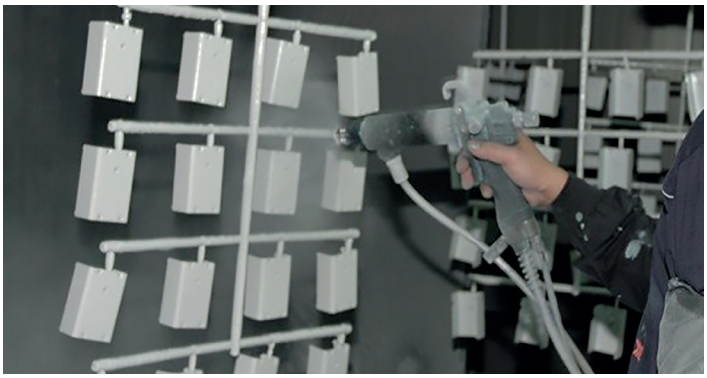

ELECTROSTATIC PAINTING
WITH THE POSSIBILITY OF AN
INSULATED BOX
PUMPS AND SYSTEMS FOR
INDUSTRIAL PAINTING

AIRLESS PISTON PUMP

MADE IN ITALY

SUITABLE FOR THE APPLICATION OF: Industrial paints, Primers, Water-based enamels, Anti-corrosion paints, Polyurethanes, Epoxies, Acrylics.



SPARE PARTS EXPLODED VIEW VTP 010
Pag. 428



GASKET KIT
Cod. 930323



VTP 010

AIRLESS PNEUMATIC STAINLESS STEEL PISTON PUMP MOUNTED ON TROLLEY COMPLETE WITH REDUCING FILTER AND LUBRICATOR AND LINE FILTER

CODE:	VTP01036
PRESSURE RATIO:	10:1
FLOW:	12 lt/min
MAX PRESSURE:	70 bar
OPERATING PRESSURE:	0 - 7 bar

AIRMIX STANDARD KIT:

CODE	DESCRIPTION
VTP01036	Airless pump VTP 010 mounted on cart complete
0836912S	Stainless steel paint suction system Ø 19 suction M 1/2" FS 36x2 90° facing up
661610	Airmix double hose fitted FS 1/4" 10 m
10200041	VS 41 Airmix manual gun with long filter holder complere with mix nozzle
COMPLETE KIT PRICE:	



AIRLESS PISTON PUMP

MADE IN ITALY

SUITABLE FOR THE APPLICATION OF: Industrial paints, Primers, Water-based enamels, Anti-corrosion paints, Polyurethanes, Epoxies, Acrylics.

VTS 201

AIRLESS PNEUMATIC STAINLESS STEEL PISTON PUMP MOUNTED ON TROLLEY COMPLETE WITH REDUCING FILTER AND LUBRICATOR AND LINE FILTER

CODE:	TS20100
PRESSURE RATIO:	20:1
FLOW:	12 lt/min
MAX PRESSURE:	140 bar
OPERATING PRESSURE:	0 - 7 bar



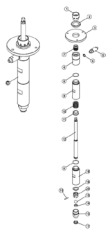

SPARE PARTS EXPLODEDVIEW VTS 201
Pag. 428



GASKET KIT
Cod. 930323



AIRMIX STANDARD KIT:

CODE	DESCRIPTION
TS20100	Airless pump VTS 210 mounted on cart complete
0836912S	Stainless steel paint suction system Ø 19 suction M 1/2" FS 36x2 90° facing up
661610	Airmix double hose fitted FS 1/4" 10 m
10200041	VS 41 Airmix manual gun with long filter holder complere with mix nozzle
COMPLETE KIT PRICE:	

AIRLESS STANDARD KIT:

CODE	DESCRIPTION
TS20100	Airless pump VTS 210 mounted on cart complete
0836912S	Stainless steel paint suction system Ø 19 suction M 1/2" FS 36x2 90° facing up
614104	HP hose 1/4" fitted FG 1/4" 10 m
VS818145	VS 818 Airless spray gun 11/16"
AR8555051	TIp guard 11/16" Airlessco
ARVXXXA	TIp guard 11/16" Airlessco
COMPLETE KIT PRICE:	



AIRLESS PISTON PUMPS

MADE IN ITALY

SUITABLE FOR THE APPLICATION OF: Industrial coatings, Primers, Water-based enamels, Anti-corrosion paints, Polyurethane, Epoxy, Acrylic.

VTS 301/S

AIRLESS PNEUMATIC STAINLESS STEEL PISTON PUMP MOUNTED ON TROLLEY COMPLETE WITH REDUCING FILTER AND LUBRICATOR AND LINE FILTER

CODE:	TS32100
PRESSURE RATIO:	30:1
FLOW:	12 lt/min
MAX PRESSURE:	210 bar
OPERATING PRESSURE:	0 - 7 bar



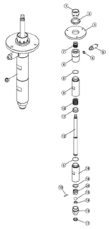

SPARE PARTS EXPLODED VIEW VT S 301/S
Pag. 432



GASKET KIT
Cod. 930323



AIRMIX STANDARD KIT:

CODE	DESCRIPTION
TS32100	Airless pump VTS 301/S mounted on cart complete
0836912S	Stainless steel paint suction system Ø 19 suction M 1/2" FS 36x2 90° facing up
661610	Airmix double hose fitted FS 1/4" 10 m
10200041	VS 41 Airmix manual gun with long filter holder complere with mix nozzle
	COMPLETE KIT PRICE:

AIRLESS STANDARD KIT:

CODE	DESCRIPTION
TS32100	Airless pump VTS 301/S mounted on cart complete
0836912S	Stainless steel paint suction system Ø 19 suction M 1/2" FS 36x2 90° facing up
614104	HP hose 1/4" fitted FG 1/4" 10 m
VS818145	VS 818 Airless spray gun 11/16"
AR8555051	TIp guard 11/16" Airlessco
ARVXXXA	Reversible tip ARV
	COMPLETE KIT PRICE:



AIRLESS PISTON PUMP

MADE IN ITALY

SUITABLE FOR THE APPLICATION OF: Industrial paints, Primers, Water-based enamels, Anti-corrosion paints, Polyurethanes, Epoxies, Acrylics.

ECO 401 P

AIRLESS PNEUMATIC STAINLESS STEEL PISTON PUMP MOUNTED ON TROLLEY COMPLETE WITH LUBRICATOR AND LINE FILTER

CODE:	ECO401P1
PRESSURE RATIO:	35:1
FLOW:	5 lt/min
MAX PRESSURE:	245 bar
OPERATING PRESSURE:	0 - 7 bar



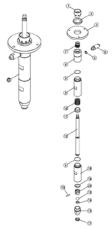

SPARE PARTS EXPLODED VIEW ECO 401
Pag. 430



GASKET KIT
Cod. 930321



AIRMIX STANDARD KIT:

CODE	DESCRIPTION
ECO401P1	Airless pump ECO 401 P mounted on cart complete
520001RT	Nylon tank kit 6 lt complete with tank, cover and return hose 20x2
661610	Airmix double hose fitted FS 1/4” 10 m
10200041	VS 41 Airmix manual gun with long filter holder complere with mix nozzle
	COMPLETE KIT PRICE:

AIRLESS STANDARD KIT:

CODE	DESCRIPTION
ECO401P1	Airless pump ECO 401 P mounted on cart complete
520001RT	Nylon tank kit 6 lt complete with tank, cover and return hose 20x2
614104	HP hose 1/4” fitted FG 1/4” 10 m
VS818145	VS 818 Airless spray gun 11/16”
AR8555051	TIp guard 11/16” Airlessco
ARVXXXA	Reversible tip ARV
	COMPLETE KIT PRICE:



AIRLESS PISTON PUMP

MADE IN ITALY

SUITABLE FOR THE APPLICATION OF Industrial paints, Primers, Water-based enamels, Anti-corrosion paints, Polyurethanes, Epoxies, Acrylics.

ECO 401 TS

AIRLESS PNEUMATIC STAINLESS STEEL PISTON PUMP MOUNTED ON TROLLEY COMPLETE WITH LUBRICATOR AND LINE FILTER

CODE	ECO401TS1
PRESSURE RATIO:	35:1
FLOW:	5 lt/min
MAX PRESSURE:	245 bar
OPERATING PRESSURE:	0 - 7 bar



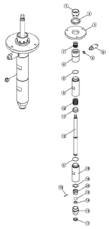

SPARE PARTS EXPLODED VIEW ECO 401 TS
Pag. 430



GASKET KIT
Cod. 930321



AIRMIX STANDARD KIT:

CODE	DESCRIPTION
ECO401TS1	Airless pump ECO 401 TS mounted on cart complete
520001RTA	Nylon tank kit 6 lt for pump with tank, return hose and U adapter FS36x2 x M36x2 S. Steel
661610	Airmix double hose fitted FS 1/4” 10 m
10200041	VS 41 Airmix manual gun with long filter holder complere with mix nozzle
COMPLETE KIT PRICE:	

KIT ALLESTIMENTO AIRLESS

CODE	DESCRIPTION
ECO401TS1	Airless pump ECO 401 TS mounted on cart complete
520001RTA	Nylon tank kit 6 lt for pump with tank, return hose and U adapter FS36x2 x M36x2 S. Steel
614104	HP hose 1/4” fitted FG 1/4” 10 m
VS818145	VS 818 Airless spray gun 11/16”
AR8555051	TIp guard 11/16” Airlessco
ARVXXXA	Reversible tip ARV
COMPLETE KIT PRICE:	



AIRLESS PISTON PUMP

MADE IN ITALY

SUITABLE FOR THE APPLICATION OF: Industrial paints, Primers, Water-based enamels, Anti-corrosion paints, Polyurethanes, Epoxies, Acrylics.

SUPER ECO 25

AIRLESS PNEUMATIC STAINLESS STEEL PISTON PUMP MOUNTED ON TROLLEY COMPLETE WITH REDUCING FILTER AND LUBRICATOR AND LINE FILTER

CODE:	S-ECO25
PRESSURE RATIO:	38:1
FLOW:	5 lt/min
MAX PRESSURE:	266 bar
OPERATING PRESSURE:	0 - 7 bar



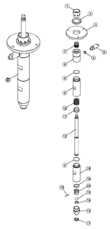

SPARE PARTS EXPLODED VIEW S-ECO 25
Pag. 433



GASKET KIT
Cod. 930321



AIRMIX STANDARD KIT:

CODE	DESCRIPTION
S-ECO 25	Airless pump SUPER ECO 25 mounted on cart complete
520001RTA	Nylon tank kit 6 lt for pump with tank, return hose and U adapter FS36x2 x M36x2 S. Steel
661610	Airmix double hose fitted FS 1/4” 10 m
10200041	VS 41 Airmix manual gun with long filter holder complere with mix nozzle
COMPLETE KIT PRICE:	

AIRLESS STANDARD KIT:

CODE	DESCRIPTION
S-ECO 25	Airless pump SUPER ECO 25 mounted on cart complete
520001RTA	Nylon tank kit 6 lt for pump with tank, return hose and U adapter FS36x2 x M36x2 S. Steel
614104	HP hose 1/4” fitted FG 1/4” 10 m
VS818145	VS 818 Airless spray gun 11/16”
AR8555051	TIp guard 11/16” Airlessco
ARVXXXA	Reversible tip ARV
COMPLETE KIT PRICE:	



AIRLESS PISTON PUMP

MADE IN ITALY

SUITABLE FOR THE APPLICATION OF: Industrial paints, Primers, Water-based enamels, Anti-corrosion paints, Polyurethanes, Epoxies, Acrylics.

VTN 321

AIRLESS PNEUMATIC STAINLESS STEEL PISTON PUMP MOUNTED ON TROLLEY COMPLETE WITH REDUCING FILTER AND LUBRICATOR AND LINE FILTER

CODE:	TN32100
PRESSURE RATIO:	30:1
FLOW:	8 lt/min
MAX PRESSURE:	210 bar
OPERATING PRESSURE:	0 - 7 bar



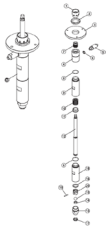

SPARE PARTS EXPLODED VIEW VTN 321
Pag. 431



GASKET KIT
Cod. 930321



AIRMIX STANDARD KIT:

CODE	DESCRIPTION
TN32100	Airless pump VTN 321 mounted on cart complete
0836912S	Stainless steel paint suction system Ø 19 suction M 1/2" FS 36x2 90° facing up
661610	Airmix double hose fitted FS 1/4" 10 m
10200041	VS 41 Airmix manual gun with long filter holder complere with mix nozzle
COMPLETE KIT PRICE:	

AIRLESS STANDARD KIT:

CODE	DESCRIPTION
TN32100	Airless pump VTN 321 mounted on cart complete
0836912S	Stainless steel paint suction system Ø 19 suction M 1/2" FS 36x2 90° facing up
614104	HP hose 1/4" fitted FG 1/4" 10 m
VS818145	VS 818 Airless spray gun 11/16"
AR8555051	TIp guard 11/16" Airlessco
ARVXXXA	Reversible tip ARV
COMPLETE KIT PRICE:	



AIRLESS PISTON PUMP

MADE IN ITALY

SUITABLE FOR THE APPLICATION OF: Industrial paints, Primers, Water-based enamels, Anti-corrosion paints, Polyurethanes, Epoxies, Acrylics.

VTN 401

AIRLESS PNEUMATIC STAINLESS STEEL PISTON PUMP MOUNTED ON TROLLEY COMPLETE WITH REDUCING FILTER AND LUBRICATOR AND LINE FILTER

CODE:	TN40100
PRESSURE RATIO:	40:1
FLOW:	8 lt/min
MAX PRESSURE:	280 bar
OPERATING PRESSURE:	0 - 7 bar



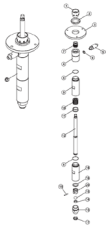

SPARE PARTS EXPLODED VIEW VTN 401
Pag. 430



GASKET KIT
Cod. 930321



AIRMIX STANDARD KIT:

CODE	DESCRIPTION
TN40100	Airless pump VTN 401 mounted on cart complete
0836912S	Stainless steel paint suction system Ø 19 suction M 1/2" FS 36x2 90° facing up
661610	Airmix double hose fitted FS 1/4" 10 m
10200041	VS 41 Airmix manual gun with long filter holder complere with mix nozzle
COMPLETE KIT PRICE:	

AIRLESS STANDARD KIT:

CODE	DESCRIPTION
TN40100	Airless pump VTN 401 mounted on cart complete
0836912S	Stainless steel paint suction system Ø 19 suction M 1/2" FS 36x2 90° facing up
614104	HP hose 1/4" fitted FG 1/4" 10 m
VS818145	VS 818 Airless spray gun 11/16"
AR8555051	TIp guard 11/16" Airlessco
ARVXXXA	Reversible tip ARV
COMPLETE KIT PRICE:	



AIRLESS PISTON PUMP

MADE IN ITALY

SUITABLE FOR THE APPLICATION OF: Industrial paints, marine paints, thixotropic paints, primers, water-based enamels, anti-corrosion paints, polyurethanes, epoxies.



VSTF 051 FE

AIRLESS PNEUMATIC PISTON PUMP MOUNTED ON TROLLEY COMPLETE WITH REDUCING FILTER AND LUBRICATOR AND LINE FILTER

CODE	VSTX0051
PRESSURE RATIO:	5:1
FLOW:	9,16 lt/min
MAX PRESSURE:	35 bar
OPERATING PRESSURE:	0 - 7 bar



GASKET KIT
Cod. R10200
€ 135,00



HEMI AIR MOTOR KIT
Cod. 17100

AIRMIX STANDARD KIT:

CODE	DESCRIPTION
VSTX0051	Airless pump VSTF 051 FE mounted on cart complete
090001	S. Steel dispersion suction system with hose Ø 25 and suction M 28x1,5 with nut FS 1”
661610	Airmix double hose fitted FS 1/4” 10 m
10200041	VS 41Airmix manual gun with long filter holder complere with mix nozzle
COMPLETE KIT PRICE:	





AIRLESS PISTON PUMP

MADE IN ITALY

SUITABLE FOR THE APPLICATION OF: Industrial paints, marine paints, thixotropic paints, primers, water-based enamels, anti-corrosion paints, polyurethanes, epoxies.

WIN 281 INOX

AIRLESS PNEUMATIC STAINLESS STEEL PISTON PUMP MOUNTED ON TROLLEY COMPLETE WITH REDUCING FILTER AND LUBRICATOR AND LINE FILTER

CODE:	H28S000
PRESSURE RATIO:	28:1
FLOW:	3,7 lt/min
MAX PRESSURE:	196 bar
OPERATING PRESSURE:	3 - 7 bar





GASKET KIT
Cod. R28S200



NARE AIR MOTOR KIT
Cod. R281100-W





AIRMIX STANDARD KIT:

CODE	DESCRIPTION
H28S000	Airless pump WIN 281 INOX mounted on cart complete
0803412	S. steel paint suction system with hose Ø 19 and suction M 1/2” FS 3/4”
661610	Airmix double hose fitted FS 1/4” 10 m
10200041	VS 41 Airmix manual gun with long filter holder complere with mix nozzle
	COMPLETE KIT PRICE:

AIRLESS STANDARD KIT:

CODE	DESCRIPTION
H28S000	Airless pump WIN 281 INOX mounted on cart complete
0803412	S. steel paint suction system with hose Ø 19 and suction M 1/2” FS 3/4”
614104	HP hose 1/4” fitted FS 1/4” 10 m
VS818145	VS 818 HP hose 1/4” fitted FS 1/4” 10 m
AR8555051	TIp guard 11/16” Airlessco
ARVXXXA	Reversible tip ARV
	COMPLETE KIT PRICE:





AIRLESS PISTON PUMP

MADE IN ITALY

SUITABLE FOR THE APPLICATION OF: Industrial paints, primers, water-based enamels, anti-corrosion paints, polyurethanes, epoxies.

PRO 301 FE

AIRLESS PNEUMATIC PISTON PUMP MOUNTED ON TROLLEY COMPLETE WITH REDUCING FILTER AND LUBRICATOR AND LINE FILTER

CODE:	H28000W
PRESSURE RATIO:	28:1
FLOW:	3,7 lt/min
MAX PRESSURE:	196 bar
OPERATING PRESSURE:	3 - 7 bar





GASKET KIT
Cod. R28200



NARE AIR MOTOR KIT
Cod. R281100-W





AIRMIX STANDARD KIT:

CODE	DESCRIPTION
H28000W	Airless pump PRO 301 FE mounted on cart complete
0603412	Paint suction system with hose Ø 19 and suction M 1/2” FS 3/4”
661610	Airmix double hose fitted FS 1/4” 10 m
10200041	VS 41 Airmix manual gun with long filter holder complere with mix nozzle
	COMPLETE KIT PRICE:

KIT AIRLESS

CODE	DESCRIPTION
H28000W	Airless pump PRO 301 FE mounted on cart complete
0603412	Paint suction system with hose Ø 19 and suction M 1/2” FS 3/4”
614104	HP hose 1/4” fitted FS 1/4” 10 m
VS80500	VS 500 Airless spray gun 11/16”
AR8555051	TIp guard 11/16” Airlessco
ARVXXXA	Reversible tip ARV
	COMPLETE KIT PRICE:





AIRLESS PISTON PUMP

MADE IN ITALY

SUITABLE FOR THE APPLICATION OF: Industrial paints, primers, water-based enamels, anti-corrosion paints, polyurethanes, epoxies

PRO 451 FE

AIRLESS PNEUMATIC PISTON PUMP MOUNTED ON TROLLEY COMPLETE WITH REDUCING FILTER AND LUBRICATOR AND LINE FILTER

CODE:	H45000
PRESSURE RATIO:	45:1
FLOW:	12,5 lt/min
MAX PRESSURE:	315 bar
OPERATING PRESSURE:	3 - 7 bar





GASKET KIT
Cod. R45200

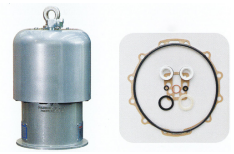

NURI AIR MOTOR KIT
Cod. R45100









AIRMIX STANDARD KIT:

CODE	DESCRIPTION
H45000	Airless pump PRO 451 FE mounted on cart complete
070001	Dispersion suction system with hose Ø 25 and suction M 28x1,5 with nut FS 1”
661610	Airmix double hose fitted FS 1/4” 10 m
10200041	VS 41 Airmix manual gun with long filter holder complere with mix nozzle
COMPLETE KIT PRICE:	

AIRLESS STANDARD KIT:

CODE	DESCRIPTION
H45000	Airless pump PRO 451 FE mounted on cart complete
070001	Dispersion suction system with hose Ø 25 and suction M 28x1,5 with nut FS 1”
814104	Double braid hose 1/4” fitted FS 1/4” 10m
VS80500	VS 500 Airless spray gun 11/16”
AR8555051	TIp guard 11/16” Airlessco
ARVXXXA	Reversible tip ARV
COMPLETE KIT PRICE:	









AIRLESS PISTON PUMP

MADE IN ITALY

SUITABLE FOR THE APPLICATION OF: Industrial paints, marine paints, thixotropic paints, primers, water-based enamels, anti-corrosion paints, polyurethanes, epoxies.

PRO TEC 451 INOX

AIRLESS PNEUMATIC STAINLESS STEEL PISTON PUMP MOUNTED ON TROLLEY COMPLETE WITH REDUCING FILTER AND LUBRICATOR AND LINE FILTER

CODE:	H45S000
PRESSURE RATIO:	45:1
FLOW:	12,5 lt/min
MAX PRESSURE:	196 bar
OPERATING PRESSURE:	3 - 7 bar





GASKET KIT
Cod. R45S200



NURI AIR MOTOR KIT
Cod. R45100









AIRMIX STANDARD KIT:

CODE	DESCRIPTION
H45S000	Airless pump PRO 451 INOX mounted on cart complete
090001	S.Steel dispersion suction system with hose Ø25 and suction M 28x1,5 with nut FS 1”
661610	Airmix double hose fitted FS 1/4” 10 m
10200041	VS 41 Airmix manual gun with long filter holder complere with mix nozzle
COMPLETE KIT PRICE:	

AIRLESS STANDARD KIT:

CODE	DESCRIPTION
H45S000	Airless pump PRO 451 INOX mounted on cart complete
090001	S.Steel dispersion suction system with hose Ø25 and suction M 28x1,5 with nut FS 1”
814104	Double braid hose 1/4” fitted FS 1/4” 10m
VS80500	VS 500 Airless spray gun 11/16”
AR8555051	TIp guard 11/16” Airlessco
ARVXXXA	Reversible tip ARV
COMPLETE KIT PRICE:	









AIRLESS PISTON PUMP

MADE IN ITALY

SUITABLE FOR THE APPLICATION OF: Industrial paints, marine paints, primers, anti-corrosion paints, polyurethanes, epoxies.

PRO MAX H56

AIRLESS PNEUMATIC PISTON PUMP MOUNTED ON TROLLEY COMPLETE WITH REDUCING FILTER AND LUBRICATOR AND LINE FILTER

CODE:	H56000PBS
PRESSURE RATIO:	56:1
FLOW:	38,4 lt/min
MAX PRESSURE:	392 bar
OPERATING PRESSURE:	3 - 7 bar





GASKET KIT
Cod. R45D200



MARU AIR MOTOR KIT
Cod. R72100









AIRMIX STANDARD KIT:

CODE	DESCRIPTION
H56000PBS	Airless pump PRO MAX H56 mounted on cart complete
070001	Dispersion suction system with hose Ø 25 and suction M 28x1,5 with nut FS 1”
661610	Airmix double hose fitted FS 1/4” 10 m
10200041	VS 41 Airmix manual gun with long filter holder complere with mix nozzle
COMPLETE KIT PRICE:	

AIRLESS STANDARD KIT:

CODE	DESCRIPTION
H56000PBS	Airless pump PRO MAX H56 mounted on cart complete
070001	Dispersion suction system with hose Ø 25 and suction M 28x1,5 with nut FS 1”
814104	Double braid hose 1/4” fitted FS 1/4” 10m
VS80500	VS 500 Airless spray gun 11/16”
AR8555051	TIp guard 11/16” Airlessco
ARVXXXA	Reversible tip ARV
COMPLETE KIT PRICE:	









AIRLESS PISTON PUMP

MADE IN ITALY

SUITABLE FOR THE APPLICATION OF: Industrial paints, marine paints, thixotropic paints, primers, water-based enamels, anti-corrosion paints, polyurethanes, epoxies.

PRO MAX H56 INOX

AIRLESS PNEUMATIC STAINLESS STEEL PISTON PUMP MOUNTED ON TROLLEY COMPLETE WITH REDUCING FILTER AND LUBRICATOR AND LINE FILTER

CODE:	H56S000
PRESSURE RATIO:	56:1
FLOW:	38,4 lt/min
MAX PRESSURE:	392 bar
OPERATING PRESSURE:	3 - 7 bar





GASKET KIT
Cod. R45S200



MARU AIR MOTOR KIT
Cod. R72100







AIRMIX STANDARD KIT:

CODE	DESCRIPTION
H56S000	Airless pump PRO MAX H56 INOX mounted on cart complete
090001	S.Steel dispersion suction system with hose Ø25 and suction M 28x1,5 with nut FS 1”
661610	Airmix double hose fitted FS 1/4” 10 m
10200041	VS 41 Airmix manual gun with long filter holder complere with mix nozzle
	COMPLETE KIT PRICE:

AIRLESS STANDARD KIT:

CODE	DESCRIPTION
H56S000	Airless pump PRO MAX H56 INOX mounted on cart complete
090001	S.Steel dispersion suction system with hose Ø25 and suction M 28x1,5 with nut FS 1”
814104	Double braid hose 1/4” fitted FS 1/4” 10m
VS80500	VS 500 Airless spray gun 11/16”
AR8555051	TIp guard 11/16” Airlessco
ARVXXXA	Reversible tip ARV
	COMPLETE KIT PRICE:









AIRLESS PISTON PUMP

MADE IN ITALY

SUITABLE FOR THE APPLICATION OF: Industrial paints, primers, water-based enamels, anti-corrosion paints, polyurethanes, epoxies.

PRO 631 FE

AIRLESS PNEUMATIC PISTON PUMP MOUNTED ON TROLLEY COMPLETE WITH REDUCING FILTER AND LUBRICATOR AND LINE FILTER

CODE:	H63000
PRESSURE RATIO:	63:1
FLOW:	9,7 lt/min
MAX PRESSURE:	441 bar
OPERATING PRESSURE:	3 - 7 bar





GASKET KIT
Cod. R63200

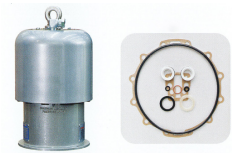

NURI AIR MOTOR KIT
Cod. R45100

AIRLESS STANDARD KIT:

CODE	DESCRIPTION
H63000	Airless pump PRO 631 FE mounted on cart complete
070001	Dispersion suction system with hose Ø 25 and suction M 28x1,5 with nut FS 1”
814104	Double braid hose 1/4” fitted FS 1/4” 10m
VS80500	VS 500 Airless spray gun 11/16”
AR8555051	TIp guard 11/16” Airlessco
ARVXXXA	Reversible tip ARV
	COMPLETE KIT PRICE:



AIRLESS PISTON PUMP

MADE IN ITALY

SUITABLE FOR THE APPLICATION OF: Industrial paints, marine paints, thixotropic paints, primers, water-based enamels, anti-corrosion paints, polyurethanes, epoxies.

PRO 631 INOX

AIRLESS PNEUMATIC STAINLESS STEEL PISTON PUMP MOUNTED ON TROLLEY COMPLETE WITH REDUCING FILTER AND LUBRICATOR AND LINE FILTER

CODE:	H63S000
PRESSURE RATIO:	63:1
FLOW:	9,7 lt/min
MAX PRESSURE:	441 bar
OPERATING PRESSURE:	3 - 7 bar





GASKET KIT
Cod. R63S200
€ 264,00

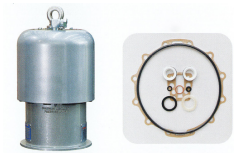

NURI AIR MOTOR KIT
Cod. R45100

AIRLESS STANDARD KIT:

CODE	DESCRIPTION
H63S000	Airless pum PRO 631 INOX mounted on cart complete
090001	S.Steel dispersion suction system with hose Ø25 and suction M 28x1,5 with nut FS 1”
814104	Double braid hose 1/4” fitted FS 1/4” 10m
VS80500	VS 500 Airless spray gun 11/16”
AR8555051	TIp guard 11/16” Airlessco
ARVXXXA	Reversible tip ARV
	COMPLETE KIT PRICE:



AIRLESS PISTON PUMP

MADE IN ITALY

SUITABLE FOR THE APPLICATION OF: Industrial paints, primers, water-based enamels, anti-corrosion paints, polyurethanes, epoxies.

PRO TEC 681 INOX

AIRLESS PNEUMATIC STAINLESS STEEL PISTON PUMP MOUNTED ON TROLLEY COMPLETE WITH REDUCING FILTER AND LUBRICATOR AND LINE FILTER

CODE:	H68S000
PRESSURE RATIO:	68:1
FLOW:	11 lt/min
MAX PRESSURE:	476 bar
OPERATING PRESSURE:	3 - 7 bar





GASKET KIT
Cod. R68S200



NURI AIR MOTOR KIT
Cod. R68100

AIRLESS STANDARD KIT:

CODE	DESCRIPTION
H68S000	Airless pump PRO TEC 681 INOX mounted on cart complete
090001	S.Steel dispersion suction system with hose Ø25 and suction M 28x1,5 with nut FS 1”
814104	Double braid hose 1/4” fitted FS 1/4” 10m
VS80500	VS 500 Airless spray gun 11/16”
AR8555051	TIp guard 11/16” Airlessco
ARVXXXA	Reversible tip ARV
COMPLETE KIT PRICE:	





AIRLESS PISTON PUMP

MADE IN ITALY

SUITABLE FOR THE APPLICATION OF: Industrial paints, marine paints, thixotropic paints, primers, water-based enamels, anti-corrosion paints, polyurethanes, epoxies.

PRO MAX H72

AIRLESS PNEUMATIC PISTON PUMP MOUNTED ON TROLLEY COMPLETE WITH REDUCING FILTER AND LUBRICATOR AND LINE FILTER

CODE:	H72000PBS
PRESSURE RATIO:	73:1
FLOW:	29,65 lt/min
MAX PRESSURE:	500 bar
OPERATING PRESSURE:	3 - 7 bar





GASKET KIT
Cod. R63D200



MARU AIR MOTOR KIT
Cod. R72100

AIRLESS STANDARD KIT:

CODE	DESCRIPTION
H72000PBS	Airless pump PRO MAX H72 mounted on cart complete
070001	Dispersion suction system with hose Ø 25 and suction M 28x1,5 with nut FS 1”
814104	Double braid hose 1/4” fitted FS 1/4” 10m
T507155	T720 Airless manual spray gun 11/16”
AR8555051	TIp guard 11/16” Airlessco
ARVXXXA	Reversible tip ARV
	COMPLETE KIT PRICE:



AIRLESS PISTON PUMP

MADE IN ITALY

SUITABLE FOR THE APPLICATION OF: Industrial paints, marine paints, thixotropic paints, primers, water-based enamels, anti-corrosion paints, polyurethanes, epoxies.

PRO HX 450

AIRLESS PNEUMATIC PISTON PUMP MOUNTED ON TROLLEY COMPLETE WITH REDUCING FILTER AND LUBRICATOR AND LINE FILTER

CODE:	H45X000
PRESSURE RATIO:	45:1
FLOW:	12,5 lt/min
FLOW CYCLES:	250 cc
MAX PRESSURE:	315 bar
OPERATING PRESSURE:	3 - 7 bar





GASKET KIT
Cod. RX45200



MARU AIR MOTOR KIT
Cod. 45100

AIRLESS STANDARD KIT:

CODE	DESCRIPTION
H45X000	Airless pump PRO MAX H72 mounted on cart complete
090001	Dispersion suction system with hose Ø 25 and suction M 28x1,5 with nut FS 1”
814104	Double braid hose 1/4” fitted FS 1/4” 10m
VS80500	VS 500 Airless manual spray gun 11/16”
AR8555051	TIp guard 11/16” Airlessco
ARVXXXA	Reversible tip ARV
	COMPLETE KIT PRICE:



AIRLESS PISTON PUMP

MADE IN ITALY

SUITABLE FOR THE APPLICATION OF: Industrial paints, marine paints, thixotropic paints, primers, water-based enamels, anti-corrosion paints, polyurethanes, epoxies.

PRO HX 560

AIRLESS PNEUMATIC STAINLESS STEEL PISTON PUMP MOUNTED ON TROLLEY COMPLETE WITH REDUCING FILTER AND LUBRICATOR AND LINE FILTER

CODE:	H56X000
PRESSURE RATIO:	56:1
FLOW:	11 lt/min
FLOW RATE:	220 cc
MAX PRESSURE:	392 bar
OPERATING PRESSURE:	3 - 7 bar





GASKET KIT
Cod. RX56200



MIR AIR MOTOR KIT
Cod. 45100

AIRLESS STANDARD KIT:

CODE	DESCRIPTION
H56X000	Airless pump PRO TEC 681 INOX mounted on cart complete
090001	S.Steel dispersion suction system with hose Ø25 and suction M 28x1,5 with nut FS 1”
814104	Double braid hose 1/4” fitted FS 1/4” 10m
VS80500	VS 500 Airless spray gun 11/16”
AR8555051	TIp guard 11/16” Airlessco
ARVXXXA	Reversible tip ARV
	COMPLETE KIT PRICE:



AIRLESS PISTON PUMP

MADE IN ITALY

SUITABLE FOR THE APPLICATION OF: Industrial paints, marine paints, thixotropic paints, primers, water-based enamels, anti-corrosion paints, polyurethanes, epoxies.

PRO HX 680

AIRLESS PNEUMATIC STAINLESS STEEL PISTON PUMP MOUNTED ON TROLLEY COMPLETE WITH REDUCING FILTER AND LUBRICATOR AND LINE FILTER

CODE:	H68X000
PRESSURE RATIO:	68:1
FLOW:	9 lt/min
FLOW RATE:	180 cc
MAX PRESSURE:	476 bar
OPERATING PRESSURE:	3 - 7 bar





GASKET KIT
Cod. RX68200



MIR AIR MOTOR KIT
Cod. 45100

AIRLESS STANDARD KIT:

CODE	DESCRIPTION
H68X000	Airless pump PRO HX 680 mounted on cart complete
090001	S.Steel dispersion suction system with hose Ø25 and suction M 28x1,5 with nut FS 1”
814104	Double braid hose 1/4” fitted FS 1/4” 10m
VS80500	VS 500 Airless spray gun 11/16”
AR8555051	TIp guard 11/16” Airlessco
ARVXXXA	Reversible tip ARV
	COMPLETE KIT PRICE:



TURBINES FOR PIPE PAINTING

MADE IN ITALY

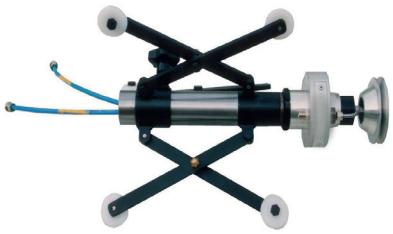

CODE	DESCRIPTION
450970	RPC-125 system for internal painting of pipes from ø 65 mm to ø 340 mm
450980	RPC-300 system for internal painting of pipes from ø 250 mm to ø800 mm

CODE	DESCRIPTION
A7304001	Pipecoater IV system for internal painting of pipes with 1.07mm nozzle without carriage
A7304005	Centering carriage for Pipe Coater IV for pipe with diameter from ø76 mm to ø125mm
A7304006	Centering carriage for Pipe Coater IV for pipe with diameter from ø125 mm to ø300mm







CODE	DESCRIPTION
A7301001	Pipecoater III system for internal painting of pipes from ø 76 mm to ø 125 mm
A7302000	Pipecoater III system for internal painting of pipes from ø 125 mm to ø 300 mm

CODE	DESCRIPTION
A7303000	Pipecoater III system for the internal painting of pipes from ø 300 mm to ø 900 mm





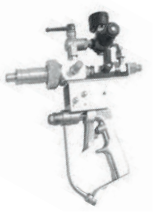

CODE	DESCRIPTION
A7100200	Pipecoater II system for internal painting of pipes from ø 180 mm to ø 950 mm control hose 5 m
A7100800	Pipecoater II system for internal painting of pipes from ø 180 mm to ø 950 mm, control hose 15 m

CODE	DESCRIPTION
4509TF1	Articulated system for internal painting of tubes complete with rose nozzle for airless sprayers F 11/16 ”
4509TF2	Articulated system for internal painting of tubes complete with rose nozzle for airless sprayers F 7/8 ”

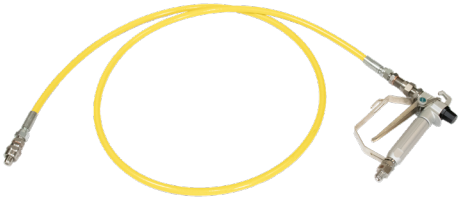

EXTRUSION PUMPS

MADE IN ITALY



PRO 551E

AIRLESS PNEUMATIC PISTON PUMP WITH EXTRUSION PLATE MOUNTED ON PNEUMATIC SUPPORT COMPLETE WITH REDUCING FILTER

CODE:	H55E000
PRESSURE RATIO:	55:1
FLOW:	12 lt/min
MAX PRESSURE:	385 bar
HEIGHT LIFT:	120 mm
OPERATING PRESSURE:	3 - 7 bar

PRO 551P

PNEUMATIC PISTON AIRLESS PUMP WITH EXTRUSION PLATE MOUNTED ON TROLLEY WITH REDUCING FILTER

CODE:	H55P000
PRESSURE RATIO:	50:1
FLOW:	4,5 lt/min
MAX PRESSURE:	350 bar
HEIGHT LIFT:	120 mm
OPERATING PRESSURE:	3 - 7 bar





PRO 401E

AIRLESS PNEUMATIC PISTON PUMP WITH EXTRUSION PLATE MOUNTED ON PNEUMATIC SUPPORT COMPLETE WITH REDUCING FILTER

CODE:	H40E000
PRESSURE RATIO:	55:1
FLOW:	7,5 lt/min
MAX PRESSURE:	280 bar
HEIGHT LIFT:	120 mm
OPERATING PRESSURE:	3 - 7 bar

EXTRUSION PUMPS

MADE IN ITALY



PRO 401P

AIRLESS PNEUMATIC PISTON PUMP WITH EXTRUSION PLATE MOUNTED ON PNEUMATIC SUPPORT COMPLETE WITH REDUCING FILTER

CODE:	H40P000
PRESSURE RATIO:	40:1
FLOW:	7,5 lt/min
MAX PRESSURE:	280 bar
HEIGHT LIFT:	120 mm
OPERATING PRESSURE:	3 - 7 bar

PRO 201P

AIRLESS PNEUMATIC PISTON PUMP WITH EXTRUSION PLATE MOUNTED ON PNEUMATIC SUPPORT COMPLETE WITH REDUCING FILTER

CODE:	H20P000
PRESSURE RATIO:	20:1
FLOW:	4,5 lt/min
MAX PRESSURE:	140 bar
HEIGHT LIFT:	100 mm
OPERATING PRESSURE:	3 - 7 bar





MANUAL AIRLESS GUN
FOR SILICONES G750
CODE: G75000VS
PRICE: € 285,00

PTFE TUBE 5METERS CONNECTED 3/8

PRESSURE RATIO:	250Bar
CODE:	538000S5
PRICE:	€ 200,00

ACCESSORIES



MANUAL AIRLESS SPRAY GUN FOR SILICONES PRO-FOREX

CODE	FLUID INLET	HEAD	MAX PRESSURE
HSG7750PRO	1/2”	For cones	510 Bar

CODE	DESCRIPTION
RG61000	Repair kit spray gun Pro-Forex
VRGH001	Metallic injector with 11/16” nut
VRGH002	Metallic injector with 7/8” nut
VRGH003	Plastic injector with thread
VRGH004	Plastic injector with thread
512000T5	5M 1/2 PTFE Double Wire Braid Pipe

EXTRUSION PUMP ACCESSORIES



Code	Description
55E200	Complete pumping for Ram H55E000
R55E200	Pumping Ram 55E Repair Kit complete with balls and gaskets

Code	Description
55P200	Complete pumping for Ram H55P000
20P200	Complete pumping for Ram H20P000
R55P200	Pumping Ram 55p e 20p Repair Kit complete with balls and gaskets





Code	Description
40E200	Complete pumping for Ram H40E000 e H40P000
R40E200	Pumping Ram 401P e 401E Repair Kit complete with balls and gaskets

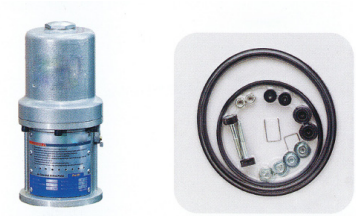

Code	Description
R28100-W	Pneumatic Nare Motor Repair kit 28100-W suitable for Ram 201 P

Code	Description
R45100	Pneumatic Nare Motor Repair kit 45100 suitable for Ram 551E

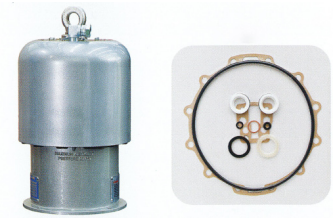

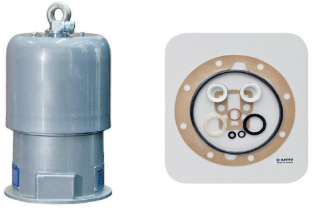

Code	Description
R55P100	Pneumatic Mirine Motor Repair kit 55P100 suitable for Ram 401E - 401P - 551P

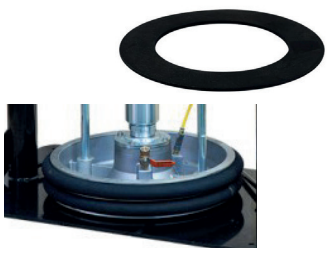

Code	Description
55E334	Tubular gasket for Ram 551E with plate 580mm for 200 lt tanks
55E335	Support Belt Ram 551E gasket
55P348	Couple of flat gaskets with 260mm plate for 20 lt tanks

TRANSFER PUMPS

MADE IN ITALY

PISTON TRANSFER PUMP WITH LONG SHAFTTHESE TRANSFER PUMPS HAVE BEEN DESIGNED FOR THE TRANSFER OF LIQUIDS, OILS AND POLYUREA.
THANKS TO THE STAINLESS STEEL PISTON AND THE PTFE SEALS THESE PUMPS ARE SUITABLE FOR CONTINUOUS WORK AND WITH CHEMICAL PRODUCTS.

TRANSFER PUMP
RATIO 2:1



TRANSFER PUMP
RATIO 3:1



TRANSFER PUMP WITH LONG SHAFT

CODE:	PU50031	PU50021
PRESSURE RATIO:	3:1	2:1
OPERATING PRESSURE:	0 - 7 bar	0 - 7 bar
SUCTION HOSE:	880 MM	880 MM
FLOW:	18 lt/min	18 lt/min
AIR CONSUMPTION:	250 lt/min	250 lt/min
WEIGHT:	13 kg	24,5 kg



ADAPTERS FOR TANKS

CODE	DESCRIPTION
S500310RV	Adapter 3:1
S500210RV	Adapter 2:1



GASKET KIT

CODE	DESCRIPTION
500310	3:1 Transfer Pump Gasket Kit
500210	2:1 Transfer pump gasket kit

TRANSFER PUMPS

MADE IN ITALY

DIVORCED PISTON PUMP RATIO 2: 1 COMPLETE WITH SYSTEM WITH DOUBLE SUCTION, TAP, MANOMETER AND LINE FILTER

CODE	VSTXD2C
FLOW	10 lt/min
FEATURES:	divorced
OPERATING PRESSURE:	3 - 12 bar

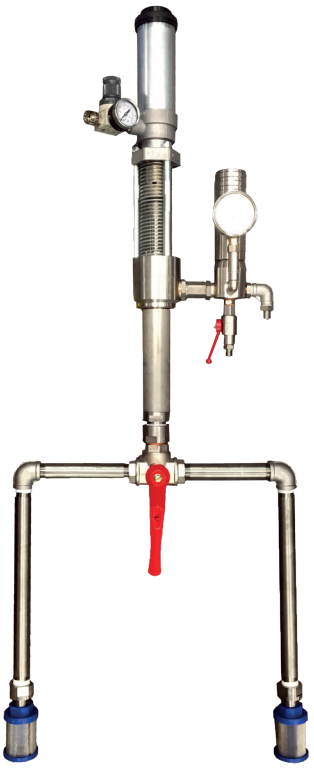



DIVORCED PISTON PUMP RATIO 10: 1 COMPLETE WITH SYSTEM WITH DOUBLE SUCTION, MANOMETER AND LINE FILTER

CODE	VTP10D2C
FLOW	8 lt/min
OPERATING PRESSURE:	3 - 12 bar

BELLOW PUMP

MADE IN ITALY



PMX 8/30

BELLOW PUMP WITH STAINLESS STEEL PISTON MOUNTED ON TROLLEY COMPLETE WITH REDUCING FILTER AND 2PCS OF SUCTION SYSTEM

CODE:	VS700830
PRESSURE RATIO:	30:1
FLOW:	8 lt/min
MAX PRESSURE:	180 bar
CYCLE FLOW:	81,4 cc



PMX 18/30

BELLOW PUMP WITH STAINLESS STEEL PISTON MOUNTED ON TROLLEY COMPLETE WITH REDUCING FILTER AND 2PCS OF SUCTION SYSTEM

CODE:	VS701230
PRESSURE RATIO:	30:1
FLOW:	12 lt/min
MAX PRESSURE:	180 bar
CYCLE FLOW:	132 cc

BI-COMPONENT BELLOW PUMP



PMX 8/30 2C

BI-COMPONENT BELLOW PUMP WITH STAINLESS STEEL PISTON MOUNTED ON TROLLEY COMPLETE WITH REDUCING FILTER AND 2PCS OF SUCTION SYSTEM

CODE:	700830C
PRESSURE RATIO:	30:1
FLOW:	8 lt/min
MAX PRESSURE:	180 bar
CYCLE FLOW:	81,4 cc



PMX 18/30 2C

BI-COMPONENT BELLOW PUMP WITH STAINLESS STEEL PISTON MOUNTED ON TROLLEY COMPLETE WITH REDUCING FILTER AND 2PCS OF SUCTION SYSTEM

CODE:	701230C
PRESSURE RATIO:	30:1
FLOW:	12 lt/min
MAX PRESSURE:	180 bar
CYCLE FLOW:	132 cc

ELECTROSTATIC GROUP

ELECTROSTATIC GUN FOR LIQUID PAINT OTS 3000

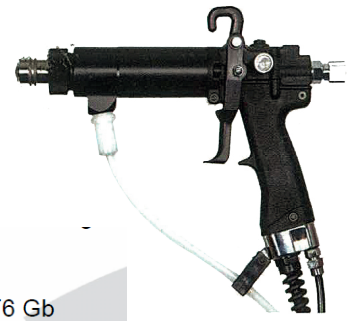

	GUN ONLY	GUN WITH CABLES 10/11 MT
CODE:	3000AG	3000AGC
INLET VOLTAGE:	0-70 Kv DC (-)	0-70 Kv DC (-)
PRESSURE:	0 - 7 bar	0 - 7 bar
WEIGHT:	470 g	470 g

II 2G
Ex h T6 Gb
Ta=0°C to + 50°C



ELECTROSTATIC POWER SUPPLY UNIT OTS 3000

CODE:	3000AP
INLET VOLTAGE:	110 - 240 V / 50 - 60 Hz
OUTLET VOLTAGE:	0-70 Kv DC (-)
OUTLET POWER:	50 microamper
WEIGHT:	470 g

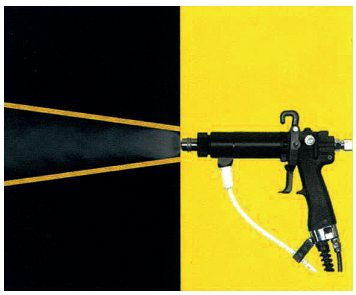



ROUND NOZZLE TIN-A

CODE	3000AA
INLET VOLTAGE:	20 - 300 ml/min
FAN DIMENSION:	40 - 150 mm
AIR CONSUMPTION:	180 Nl/min

ROUND NOZZLE FRP

CODE	3000AK
INLET VOLTAGE:	50 - 300 ml/min
FAN DIMENSION:	160 mm
AIR CONSUMPTION:	180 Nl/min

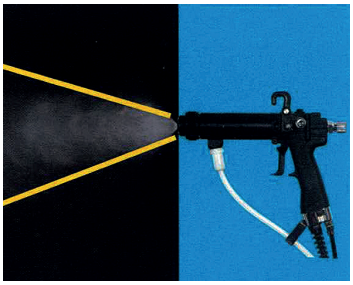





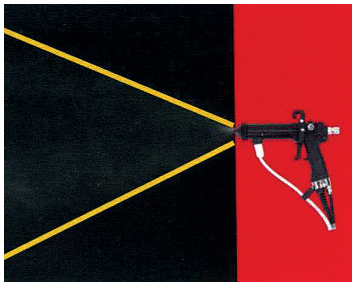

FAN NOZZLE FRP

CODE	3000AQ
INLET VOLTAGE:	100 - 400 ml/min
FAN DIMENSION:	300 mm
AIR CONSUMPTION:	180 Nl/min

ELECTROSTATIC GROUP



CERTIFIED
ATEX II 2 G EX T6 GB

II 2G
Ex h T6 Gb
Ta=0°C to + 50°C
Ref. Standards: EN 1127-1:2011,
EN ISO 80079-36:2016, EN ISO 80079-37:2016

LOW PRESSURE ELECTROSTATIC GROUP FOR LIQUID PAINT

MOUNTED ON CART COMPLETE WITH VS 25 PUMP, GENERATOR, MANUAL SPRAY GUN WITH NOZZLE AND HOSES.

CODE	OTS3000VSA
FLOW:	25 lt/min
PRESSURE RATIO:	1:1.5
VOLTAGE:	0-70 Kv DC (-)
PRESSURE:	2 - 6 bar

ELECTROSTATIC GROUP

POWER SUPPLY GROUP AND SPRAY GUN

CODE	DESCRIPTION
OTS-3000-SF-B	Electrostatic group complete with hoses 10 mt and fan nozzle FRP
OTS-3000-ST-B	Electrostatic group complete with hoses 10 mt and round nozzle TIN-B
OTS-3000-SL-B	Electrostatic group complete with hoses 10 mt and round nozzle FRP

ACCESSORIES

CODE	DESCRIPTION
3000AM50	High voltage cable 5 mt
3000AE60	Teflon product hose 6 mt
3000AT50	Polyurethane air hose 5 mt
3000AM65	High voltage cable 6.5 mt
3000AE75	Teflon product hose 7.5 mt
3000AT65	Polyurethane air hose 6.5 mt
3000AM100	High voltage cable 10 mt
3000AE110	Teflon product hose 11 mt
3000AT100	Polyurethane air hose 10 mt
3000TB	Manual kit and assembly key



INSULATED BOX KIT

COMPLETE WITH VOLTAGE RELIEF VALVE AND PNEUMATIC PISTON (GENERATOR, GUN AND PUMP EXCLUDED)

CODE	EGBOX003
DIMENSION:	600x800x1800

ELECTROSTATIC DUST GROUP





ELECTROSTATIC DUST GROUP

CODE:	VSBIB11-E
VOLTAGE:	230 50-60HZ

TWO-COMPONENT PUMP VS 2B

MADE IN ITALY

Suction part A 100% - Suction part B 18%

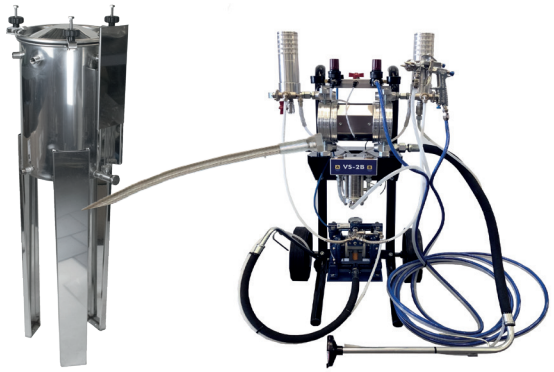

TWO-COMPONENT 18% PNEUMATIC PUMP WITH FIXED RATIO

MOUNTED ON TROLLEY COMPLETE WITH REDUCER, LINE FILTER AND WASHING PUMP

CODE:	2124018
FLOW:	20 lt/min
PRESSURE RATIO:	1:1
MIXING RATIO:	18%
PRESSURE:	2 - 6 bar

This system allows the operator to have a fresh and homogeneous mix everytime.
The washing pump is mounted on the system to avoid cleaning all of the parts after every use and cleanse just the mixing part after the use.

READY FOR USE KIT:

CODE	DESCRIPTION
2124018	Pump VS-2B 18% mounted on cart
SEB302B	30 lt tank kit with hermetic lid with long legs complete with connection tube, silica gel and return kit
0603412	Paint suction system Ø 19 and suction M 1/2" FS 3/4"
816075	Double hose 6,5x10 + 8x11 fitted 3/8" FS + 1/4 - 7,5 mt.
080012	Paint suction system Ø 13 and suction M 15x1 FG 1/2"
400970	Liquid pressure regulator 0 - 6 bar
VS603XX	Manual gun VS 603

COMPLETE KIT PRICE:

IDEAL FOR :
ACRYLICS
SOLVENTS
WATER -BASED PAINTS

N.B. DILUTE PART A BEFORE RUNNING THE PUMP

TWO-COMPONENT 20% PNEUMATIC PUMP WITH FIXED RATIO

MOUNTED ON TROLLEY COMPLETE WITH REDUCER, LINE FILTERS AND WASHING PUMP

CODE:	2124020
FLOW:	20 lt/min
PRESSURE RATIO:	1:1
MIXING RATIO:	20%
PRESSURE:	2 - 6 bar

Suction part A 100% - Suction part B 20%

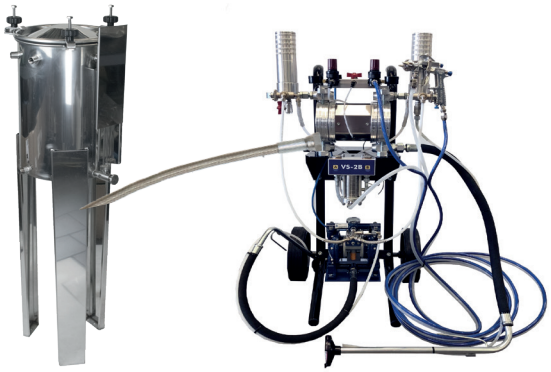

This system allows the operator to have a fresh and homogeneous mix everytime.
The washing pump is mounted on the system to avoid cleaning all of the parts after every use and cleanse just the mixing part after the use.

READY FOR USE KIT:

IDEAL FOR :
ACRYLICS
SOLVENTS
WATER -BASED PAINTS

N.B. DILUTE PART A BEFORE RUNNING THE PUMP

CODE	DESCRIPTION
2124020	Pump VS-2B 20% mounted on cart
SEB302B	30 lt tank kit with hermetic lid with long legs complete with connection tube, silica gel and return kit
0603412	Paint suction system Ø 19 and suction M 1/2" FS 3/4"
816075	Double hose 6,5x10 + 8x11 fitted 3/8" FS + 1/4 - 7,5 mt.
080012	Paint suction system Ø 13 and suction M 15x1 FG 1/2"
400970	Liquid pressure regulator 0 - 6 bar
VS603XX	Manual gun VS 603

COMPLETE KIT PRICE:

TWO-COMPONENT PUMP VS 2B

MADE IN ITALY

Suction part A 100% - Suction part B 25%

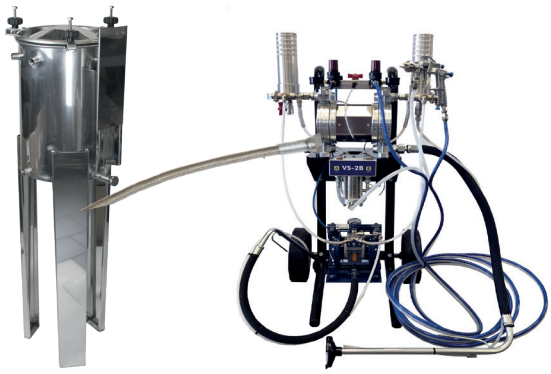

TWO-COMPONENT 25% PNEUMATIC PUMP WITH FIXED RATIO

MOUNTED ON TROLLEY COMPLETE WITH REDUCER, LINE FILTER AND WASHING PUMP

CODE:	2124025
FLOW:	20 lt/min
PRESSURE RATIO:	1:1
MIXING RATIO:	25%
PRESSURE:	2 - 6 bar

This system allows the operator to have a fresh and homogeneous mix everytime.
The washing pump is mounted on the system to avoid cleaning all of the parts after every use and cleanse just the mixing part after the use.

READY FOR USE KIT:

CODE	DESCRIPTION
2124025	Pump VS-2B 25% mounted on cart
SEB302B	30 lt tank kit with hermetic lid with long legs complete with connection tube, silica gel and return kit
0603412	Paint suction system Ø 19 and suction M 1/2" FS 3/4"
816075	Double hose 6,5x10 + 8x11 fitted 3/8" FS + 1/4 - 7,5 mt
080012	Paint suction system Ø 13 and suction M 15x1 FG 1/2"
400970	Liquid pressure regulator 0 - 6 bar
VS603XX	Manual gun VS 603
	COMPLETE KIT PRICE:

IDEAL FOR :
ACRYLICS
SOLVENTS
WATER -BASED PAINTS

N.B. DILUTE PART A BEFORE RUNNING THE PUMP

TWO-COMPONENT 30% PNEUMATIC PUMP WITH FIXED RATIO

MOUNTED ON TROLLEY COMPLETE WITH REDUCER, LINE FILTER AND WASHING PUMP

CODE:	2124010
FLOW:	20 lt/min
PRESSURE RATIO:	1:1
MIXING RATIO:	30%
PRESSURE:	2 - 6 bar

Suction part A 100% - Suction part B 30%

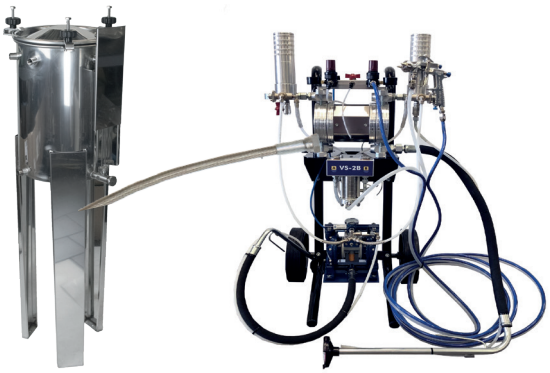

This system allows the operator to have a fresh and homogeneous mix everytime.
The washing pump is mounted on the system to avoid cleaning all of the parts after every use and cleanse just the mixing part after the use.

READY FOR USE KIT:

CODE	DESCRIPTION
2124010	Pump VS-2B 30% mounted on cart
SEB302B	30 lt tank kit with hermetic lid with long legs complete with connection tube, silica gel and return kit
0603412	Paint suction system Ø 19 and suction M 1/2" FS 3/4"
816075	Double hose 6,5x10 + 8x11 fitted 3/8" FS + 1/4 - 7,5 mt.
080012	Paint suction system Ø 13 and suction M 15x1 FG 1/2"
400970	Liquid pressure regulator 0 - 6 bar
VS603XX	Manual gun VS 603
	COMPLETE KIT PRICE:

IDEAL FOR:
ACRYLICS
POLYURETHANES

N.B. DILUTE PART A BEFORE RUNNING THE PUMP

TWO-COMPONENT PUMP VS 2B

MADE IN ITALY

Suction part A 100% - Suction part B 50%

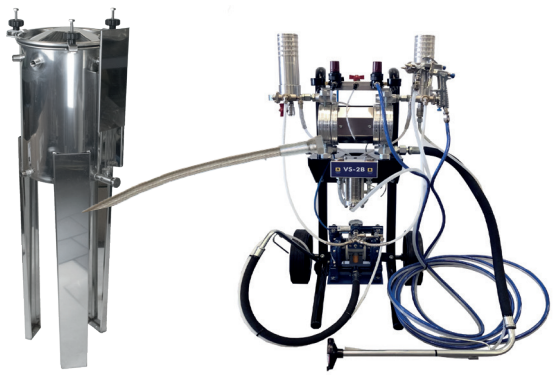

TWO-COMPONENT 50% PNEUMATIC PUMP WITH FIXED RATIO

MOUNTED ON TROLLEY COMPLETE WITH REDUCER, LINE FILTER AND WASHING PUMP

CODE:	212411
FLOW:	20 lt/min
PRESSURE RATIO:	1:1
MIXING RATIO:	50%
PRESSURE:	2 - 6 bar

This system allows the operator to have a fresh and homogeneous mix everytime.
The washing pump is mounted on the system to avoid cleaning all of the parts after every use and cleanse just the mixing part after the use.

READY FOR USE KIT:

CODE	DESCRIPTION
212411	Pump VS-2B 50% mounted on cart
SEB302B	30 lt tank kit with hermetic lid with long legs complete with connection tube, silica gel and return kit
0603412	Paint suction system Ø 19 and suction M 1/2" FS 3/4"
816075	Double hose 6,5x10 + 8x11 fitted 3/8" FS + 1/4 - 7,5 mt.
080012	Paint suction system Ø 13 and suction M 15x1 FG 1/2"
400970	Liquid pressure regulator 0 - 6 bar
VS603XX	Manual gun VS 603
	COMPLETE KIT PRICE:

IDEAL FOR :
POLYURETHANES
PRIMER AND FINISHES

N.B. DILUTE PART A BEFORE RUNNING THE PUMP

BICOMPONENT PUMP 100% PNEUMATIC WITH FIXED RATIO

MOUNTED ON TROLLEY COMPLETE WITH REDUCER, LINE FILTER AND WASHING PUMP

CODE:	212412
FLOW:	20 lt/min
PRESSURE RATIO:	1:1
MIXING RATIO:	100%
PRESSURE:	2 - 6 bar



Suction part A 100%
Suction part B 100%

This system allows the operator to have a fresh and homogeneous mix everytime.
The washing pump is mounted on the system to avoid cleaning all of the parts after every use and cleanse just the mixing part after the use.

IDEAL FOR :
POLYURETHANES
POLYESTERS

N.B. DILUTE PART A BEFORE RUNNING THE PUMP

READY FOR USE KIT:

CODE	DESCRIPTION
212412	Pump VS-2B 100% mounted on cart
0603412	Paint suction system Ø 19 and suction M 1/2" FS 3/4" - 2pcs
816075	Double hose 6,5x10 + 8x11 fitted 3/8" FS + 1/4 - 7,5 mt.
080012	Paint suction system Ø 13 and suction M 15x1 FG 1/2"
VS603XX	Manual gun VS 603
	COMPLETE KIT PRICE:

TWO-COMPONENT PUMP

MADE IN ITALY

Suction part A 100% - Suction part B 100%

TWO-COMPONENT 100% PNEUMATIC PUMP WITH FIXED RATIO

MOUNTED ON TROLLEY COMPLETE WITH REDUCER, LINE FILTER AND WASHING PUMP

CODE:	VS2B001
FLOW:	24 lt/min
PRESSURE RATIO:	1:1
MIXING RATIO:	100%
PRESSURE:	2 - 6 bar

This system allows the operator to have a fresh and homogeneous mix everytime.
The washing pump is mounted on the system to avoid cleaning all of the parts after every use and cleanse just the mixing part after the use.

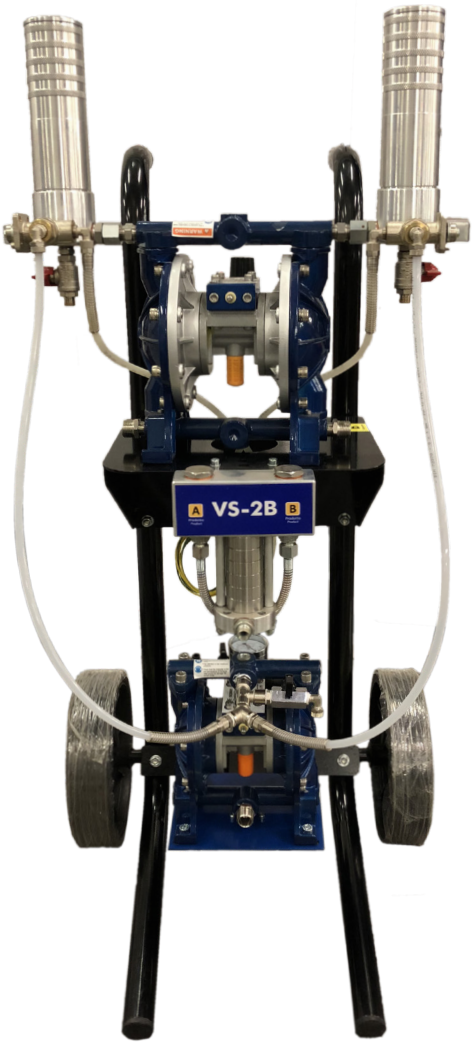







READY FOR USE KIT:

CODE	DESCRIPTION
VS2B001	Pump VS-2B ECO 100% mounted on cart
06034122P	Paint suction system Ø 19 and suction M 1/2” FS 3/4” - 2pcs
816075	TDouble hose 6,5x10 + 8x11 fitted 3/8” FS + 1/4 - 7,5 mt.
080012	Paint suction system Ø 13 and suction M 15x1 FG 1/2”
VS603XX	Manual gun VS 603

COMPLETE KIT PRICE:

IDEAL FOR:
POLYURETHANES
POLYESTERS

N.B. DILUTE PART A BEFORE RUNNING THE PUMP

TWO-COMPONENT PUMP VS 2P

MADE IN ITALY

Suction part A 100% - Suction part B 100%

TWO-COMPONENT 100% PNEUMATIC PUMP WITH FIXED RATIO

MOUNTED ON TROLLEY COMPLETE WITH REDUCER, LINE FILTER AND WASHING PUMP

CODE:	212409SNP
FLOW:	16 lt/min
PRESSURE RATIO:	30:1
MIXING RATIO:	100%
PRESSURE:	2 - 6 bar

This system allows the operator to have a fresh and homogeneous mix everytime.
The washing pump is mounted on the system to avoid cleaning all of the parts after every use and cleanse just the mixing part after the use.













READY FOR USE KIT:

CODE	DESCRIPTION
212409SNP	Pump VS-2P 100% mounted on cart
0836912S2P	Stainless steel paint suction system with hose Ø 19 and suction M 1/2" FS 36x2 90° facing down 2pz
614104	Hose HP 1/4" metallic braid fitted FS 1/4" mt. 10
VS80500	Manual gun VS 500 11/16" fitted FS 1/4"
AR8555051	Tip guard 11/16"
ARVXXX	Self-cleaning airless tip
	COMPLETE KIT PRICE:

IIDEAL FOR :
FIREPROOF
POLYURETHANES
POLYESTERS
POLYURETHANES GLOSS

N.B. DILUTE PART A BEFORE RUNNING THE PUMP

VARIABLE BICOMPONENT PUMP FROM 2% TO 25%

NEW PNEUMATIC VALVE ALARM SYSTEM TO CONTROL THE CORRECT DELIVERY OF THE CATALYST. TOTALLY PNEUMATIC.



TWO-COMPONENT PUMP
ECO 351 BV
VARIABLE RATIO

MOUNTED ON TROLLEY COMPLETE WITH REDUCERS,
LINE FILTERS AND WASHING PUMP

CODE	ECO351BV01
SCOPE:	8 lt/min
PRESSURE RATIO:	30:1
MIXING:	Da 2% al 25%
MAX PRESSURE:	210 bar
USAGE PRESSURE:	0 - 7 bar

SET-UP KIT

CODE	DESCRIPTION
ECO351BV01	Eco 351 bv two-component pump
0836912S	Stainless steel suction system tube ø19 M 1/2” FG 36x2 90° 2pcs
614104	HA 1/4" metal braid hose with FG 1/4" connection, m. 10
VS80500	VS 500 11/16” manual gun. 1/4”
AR8555051	11/16” gun body
ARVXXXA	Self-cleaning nozzle ARV
TOTAL COMPLETE KIT:	

VARIABLE BICOMPONENT PUMP FROM 6% TO 70%

NEW PNEUMATIC VALVE ALARM SYSTEM TO CONTROL THE CORRECT DELIVERY OF THE CATALYST. TOTALLY PNEUMATIC.



TWO-COMPONENT PUMP
ECO 351 BV
VARIABLE RATIO

MOUNTED ON TROLLEY COMPLETE WITH REDUCERS, LINE FILTERS AND WASHING PUMP

CODE	ECO351BV02
SCOPE:	8 lt/min
PRESSURE RATIO:	30:1
MIXING:	Da 6% al 70%
MAX PRESSURE:	210 bar
USAGE PRESSURE:	0 - 7 bar

SET-UP KIT

CODE	DESCRIPTION
ECO351BV01	Eco 351 bv two-component pump
0836912S	Stainless steel suction system tube ø19 M 1/2” FG 36x2 90° 2pcs
614104	HA 1/4" metal braid hose with FG 1/4" connection, m. 10
VS80500	VS 500 11/16” manual gun. 1/4”
AR8555051	11/16” gun body
ARVXXXA	Self-cleaning nozzle ARV
	TOTAL COMPLETE KIT:

2K MIXING AND DOSING SYSTEM

MADE IN ITALY



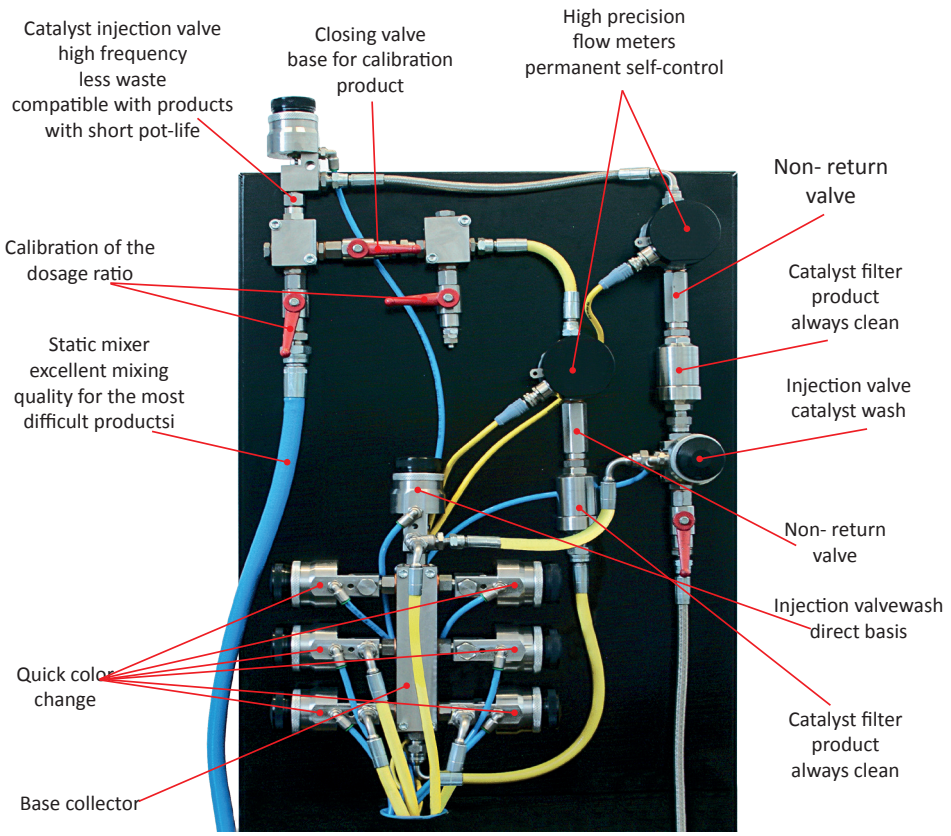

TECHNOLOGY VS MIX BP-HA

Can be used with water-based or solvent-based mono or two-component products, high dry extract paints, paints, lacquers, polyurethanes, dyes, epoxy products, water or solvent-based adhesives.

ADVANTAGES FOR THE CUSTOMER COMPARED TO MANUAL MIXING

- Reduction of working time
- Increase in productivity
- Consistent product quality
- Always fresh product
- Lower management cost
- Fast return on investment
- Product savings
- Less waste production
- Energy saving

TECHNICAL DATA

POWER SUPPLY:	230 V 50 Hz
INLET AIR PRESSURE:	6 bar
PRODUCT PRESSURE:	2 - 200 bar
MATERIAL IN CONTACT WITH PRODUCT:	stainless steel
PRODUCT DOSAGE PRECISION:	-1 + %
PRODUCT VISOSITY:	20 - 10.000 cps
MIXED PRODUCT FLOW:	50 - 2.000 cm3/mm
CONTROL CABINET:	separate
MIXING PANEL:	separate
MIXING RATIO:	5 - 100%

2K MIXING AND DOSING SYSTEM HIGH PRESSURE

MADE IN ITALY

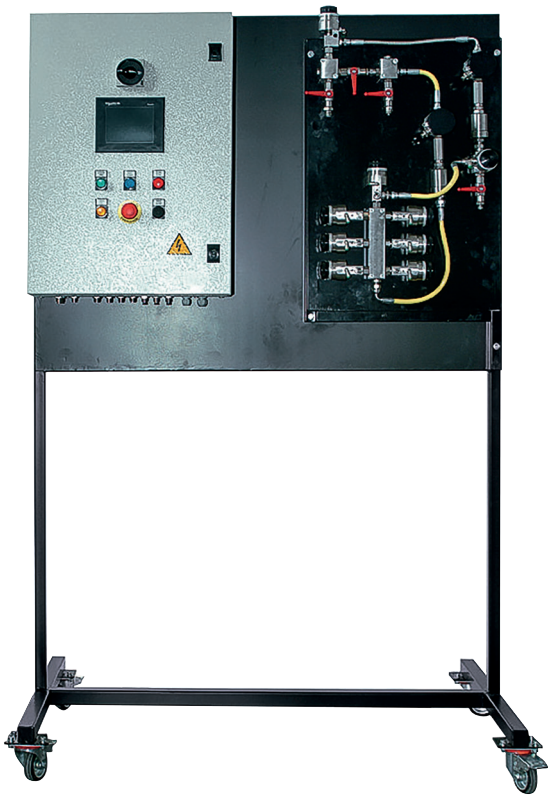

ELECTRONIC MIXING AND DOSING SYSTEM
WITH 1 COLOR AND 1 CATALYST HIGH PRESSURE DOSING PANEL

CODE:	VSMIX01HA
FLOW:	50-2000 cm^3/mm
OPERATING PRESSURE:	0 - 200 bar

ELECTRONIC MIXING AND DOSING SYSTEM
WITH 3 COLORS AND 1 CATALYST HIGH PRESSURE DOSING PANEL

CODE:	VSMIX03HA
FLOW:	50-2000 cm^3/mm
OPERATING PRESSURE:	0 - 200 bar

METAL GRATED SUPPORT
WITH RECYCLE VALVE HEIGHT 100MM, LENGTH 2000MM, WIDTH 1300MM

CODE:	TPTGR0028

ELECTRONIC MIXING AND DOSING SYSTEM
WITH 5 COLORS AND 1 CATALYST HIGH PRESSURE DOSING PANEL

CODE:	VSMIX05HA
FLOW:	50-2000 cm^3/mm
OPERATING PRESSURE:	0 - 200 bar

SET-UP KIT FOR 2 FIBER OPTIC METERS, COMPLETE WITH CABLE

CODE:	FRBG087BR

ELECTRONIC MIXING AND DOSING SYSTEM
WITH 7 COLORS AND 1 CATALYST HIGH PRESSURE DOSING PANEL

CODE:	VSMIX07HA
FLOW:	50-2000 cm^3/mm
OPERATING PRESSURE:	0 - 200 bar

4.0 OPTION WITH DATA READOUT

CODE	DESCRIPTION
BICOMP40	Remote assistance/data exchange management and work data visualization (application programming not included)

2K MIXING AND DOSING SYSTEM HIGH PRESSURE

MADE IN ITALY

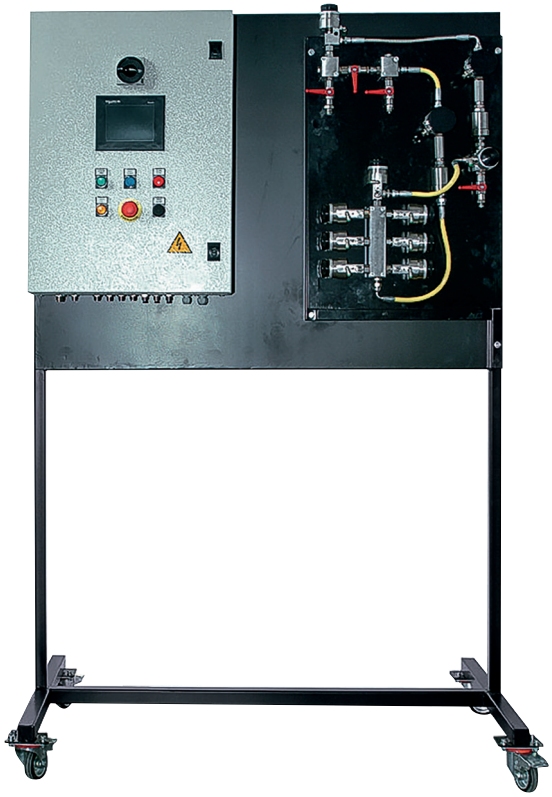

ELECTRONIC MIXING AND DOSING SYSTEM
WITH 1 COLOR AND 1 CATALYST HIGH PRESSURE DOSING PANEL

CODE:	VSMIX01BP
FLOW:	50-2000 cm^3/mm
OPERATING PRESSURE:	0 - 7 bar

ELECTRONIC MIXING AND DOSING SYSTEM
WITH 3 COLORS AND 1 CATALYST LOW PRESSURE DOSING PANEL

CODE:	VSMIX03BP
FLOW:	50-2000 cm^3/mm
OPERATING PRESSURE:	0 - 7 bar

COMPLETE KIT FOR SECOND CATALYST

COMPLETEWITH 2 INJECTION VALVES WITH BLOCK

CODE:	CTP002715

ELECTRONIC MIXING AND DOSING SYSTEM
WITH 5 COLORS AND 1 CATALYST HIGH PRESSURE DOSING PANEL

CODE:	VSMIX05BP
FLOW:	50-2000 cm^3/mm
OPERATING PRESSURE:	0 - 7 bar

WASHING KIT FOR CATALYST

COMPLETE WITH 2 INJECTION VALVE WITH BLOCK

CODE:	CTP002785

ELECTRONIC MIXING AND DOSING SYSTEM
WITH 7 COLORS AND 1 CATALYST LOW PRESSURE DOSING PANEL

CODE:	VSMIX07BP
FLOW:	50-2000 cm^3/mm
OPERATING PRESSURE:	0 - 7 bar

4.0 OPTION WITH DATA READOUT

CODE	DESCRIPTION
BICOMP40	Remote assistance/data exchange management and work data visualization (application programming not included)

2K MIXING AND DOSING SYSTEM HIGH PRESSURE

MADE IN ITALY



COMPLETE KIT FOR SECOND CATALYST

COMPLETE WITH 2 INJECTION VALVES WITH BLOCK

CODE:	CTP002715

WASHING KIT FOR CATALYST

COMPLETE WITH 2 INJECTION VALVE WITH BLOCK

CODE:	CTP002785

ELECTRONIC MIXING AND DOSING SYSTEM

WITH 1 COLOR AND 1 CATALYST HIGH PRESSURE DOSING PANEL

CODE:	VSMIXHA001
FLOW:	50-2000 cm^3/mm
OPERATING PRESSURE:	0 - 200 bar
PUMP VTN 321	32:1 8lt. n° 1 washing
PUMP VTN 321	32:1 8lt. n° 1 color
PUMP VTN321	32:1 8lt. n° 1 catalyst
S.STEEL CONTAINER 50LT	2 pcs

ELECTRONIC MIXING AND DOSING SYSTEM

WITH 3 COLORS AND 1 CATALYST HIGH PRESSURE DOSING PANEL

CODE:	VSMIXHA003
FLOW:	50-2000 cm^3/mm
OPERATING PRESSURE:	0 - 200 bar
PUMP VTN321	32:1 8lt. n° 1 washing
PUMP VTN321	32:1 8lt. n° 3 color
PUMP VTN321	32:1 8lt. n° 1 catalyst
S.STEEL CONTAINER 50LT	4 pcs

ELECTRONIC MIXING AND DOSING SYSTEM

WITH 5 COLORS AND 1 CATALYST HIGH PRESSURE DOSING PANEL

CODE:	VSMIXHA005
FLOW:	50-2000 cm^3/mm
OPERATING PRESSURE:	0 - 200 bar
PUMP VTN321	32:1 8lt. n° 1 washing
PUMP VTN321	32:1 8lt. n° 5 color
PUMP VTN321	32:1 8lt. n° 1 catalyst
S.STEEL CONTAINER 50LT	6 pcs

2K MIXING AND DOSING SYSTEM LOW PRESSURE

MADE IN ITALY

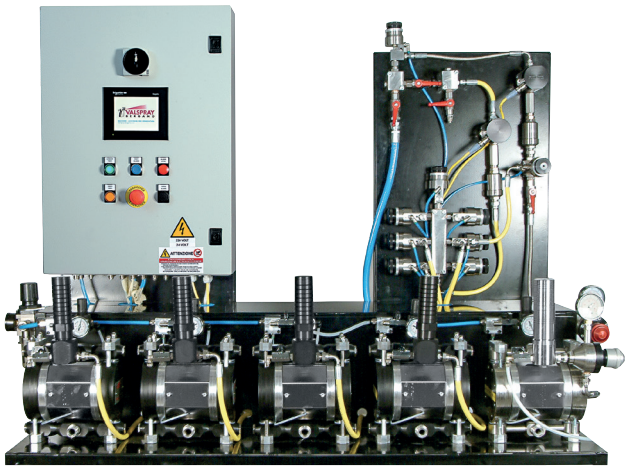

ELECTRONIC MIXING AND DOSING SYSTEM
WITH 1 COLOR AND 1 CATALYST LOW PRESSURE DOSING PANEL

CODE:	VSMIXBP001
FLOW:	50-2000 cm^3/mm
OPERATING PRESSURE:	0 - 7 bar
PUMP VS 36	1:1 36 lt. n° 1 washing
PUMP VS 36	1:1 36 lt. n° 1 color
PUMP VS 25	1:1 25 lt n° 1 catalyst
S.STEEL CONTAINER 50LT	2 pcs

COMPLETE KIT FOR SECOND CATALYST

COMPLETE WITH 2 INJECTION VALVE WITH BLOCK

CODE:	CTP002715

ELECTRONIC MIXING AND DOSING SYSTEM
WITH 3 COLORS AND 1 CATALYST LOW PRESSURE DOSING PANEL

CODE:	VSMIXBP003
FLOW:	50-2000 cm^3/mm
OPERATING PRESSURE:	0 - 7 bar
PUMP VS 36	1:1 36 lt. n° 1 washing
PUMP VS 36	1:1 36 lt. n° 3 color
PUMP VS 25	1:1 25 lt n° 1 catalyst
S.STEEL CONTAINER 50LT	4 pcs

WASHING KIT FOR CATALYST

COMPLETE WITH 2 INJECTION VALVE WITH BLOCK

CODE:	CTP002785

ELECTRONIC MIXING AND DOSING SYSTEM
WITH 5 COLORS AND 1 CATALYST LOW PRESSURE DOSING PANEL

CODE:	VSMIXBP005
FLOW:	50-2000 cm^3/mm
OPERATING PRESSURE:	0 - 7 bar
PUMP VS 36	1:1 36 lt. n° 1 washing
PUMP VS 36	1:1 36 lt. n° 5 color
PUMP VS 25	1:1 25 lt n° 1 catalyst
S.STEEL CONTAINER 50LT	6 pcs

MEMBRANE TRANSFER PUMPS



DOUBLE MEMBRANE PUMP IN ALUMINIUM WITH RATIO 1:1

CODE:	VAPA15U
FLOW:	36 lt/min
FLUID INLET:	3/8”
AIR INLET:	1/4”
OPERATING PRESSURE:	0 - 7 bar

DOUBLE MEMBRANE PUMP IN ALUMINIUM WITH RATIO 1:1

CODE:	VAPA20U
FLOW:	48 lt/min
FLUID INLET:	1/2”
AIR INLET:	1/4”
OPERATING PRESSURE:	0 - 7 bar





DOUBLE MEMBRANE PUMP IN ALUMINIUM WITH RATIO 1:1

CODE:	VAPA31U
FLOW:	180 lt/min
FLUID INLET:	1”
AIR INLET:	3/8”
OPERATING PRESSURE:	0 - 7 bar

DOUBLE MEMBRANE PUMP IN ALUMINIUM WITH RATIO 1:1

CODE:	VAPA40U
FLOW:	300 lt/min
FLUID INLET:	1 1/2”
AIR INLET:	1/2”
OPERATING PRESSURE:	0 - 7 bar





DOUBLE MEMBRANE PUMP IN ALUMINIUM WITH RATIO 1:1

CODE:	VAPS50U
FLOW:	580 lt/min
FLUID INLET:	2”
AIR INLET:	1/2”
OPERATING PRESSURE:	0 - 7 bar

MEMBRANE TRANSFER PUMPS



DOUBLE MEMBRANE PUMP IN STAINLESS STEEL WITH RATIO 1:1

CODE:	VAPS15
FLOW:	36 lt/min
FLUID INLET:	3/8”
AIR INLET:	1/4”
OPERATING PRESSURE:	0 - 7 bar

DOUBLE MEMBRANE PUMP IN STAINLESS STEEL WITH RATIO 1:1

CODE:	VAPS20
FLOW:	48 lt/min
FLUID INLET:	1/2”
AIR INLET:	1/4”
OPERATING PRESSURE:	0 - 7 bar





DOUBLE MEMBRANE PUMP IN STAINLESS STEEL WITH RATIO 1:1

CODE:	VAPS31
FLOW:	180 lt/min
FLUID INLET:	1”
AIR INLET:	3/8”
OPERATING PRESSURE:	0 - 7 bar

DOUBLE MEMBRANE PUMP IN STAINLESS STEEL WITH RATIO 1:1

CODE:	VAPS40
FLOW:	300 lt/min
FLUID INLET:	1 1/2”
AIR INLET:	1/2”
OPERATING PRESSURE:	0 - 7 bar





DOUBLE MEMBRANE PUMP IN STAINLESS STEEL WITH RATIO 1:1

CODE:	VAPS50
FLOW:	580 lt/min
FLUID INLET:	2”
AIR INLET:	1/2”
OPERATING PRESSURE:	0 - 7 bar

DOUBLE MEMBRANE PUMP IN POLYPROPYLENE WITH RATIO 1:1

CODE:	VAPPP20
FLOW:	48 lt/min
FLUID INLET:	1/2”
AIR INLET:	1/4”
OPERATING PRESSURE:	0 - 7 bar



IMPREGNATING PUMP

MADE IN ITALY



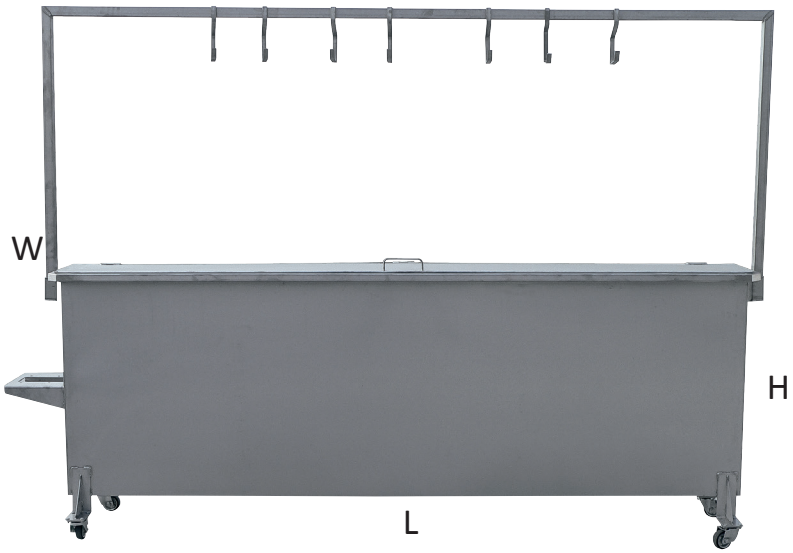

STAINLESS STEEL TANK COMPLETE WITH PUMP, HOSES, GUN AND SHOWER

CODE:	VA2400
LENGHT:	2800 mm.
HEIGHT:	950 mm.
WIDTH:	300 mm.

STAINLESS STEEL TANK COMPLETE WITH PUMP, HOSES, GUN AND SHOWER

CODE:	VA2410
LENGHT:	2800 mm.
HEIGHT:	500 mm.
WIDTH:	300 mm.

CODE	DESCRIPTION
VA2401	Antisolvent hose 10 x 17 mt. 5 fitted FS 3/8” stainless steel
VA2402	Naked shower gun
VA2403	Shower
VA2404	Complete shower gun with extension
VA2406	Impregnating pump mounted on trolley complete with rubber antisolvent hose 10x17, suction tube ø13 in stainless steel with suction filter and gun with shower kit, with use and maintenance manual and CE certification.
VA2405	Impregnating pump without trolley complete with rubber antisolvent hose 10x17, suction tube ø13 in stainless steel with suction filter and gun with shower kit, with use and maintenance manual and CE certification

LOW PRESSURE MEMBRANE PUMP

SUITABLE FOR THE PAINTING OF Industrial painting, furniture painting, plastic painting, enamels, anti-corrosion paints, polyurethane, epoxy.

VS 36

DOUBLE DIAPHRAGM PNEUMATIC PUMP MOUNTED ON CART COMPLETE WITH AIR REGULATORS AND LINE FILTER

CODE:	212496
PRESSURE RATIO:	1:1
FLOW:	36 lt/min
OPERATING PRESSURE:	2 - 8 bar



PRESSURE REDUCER
Cod. RPR500
€ 195,00



DIAPHRAGM
Cod. PB0029

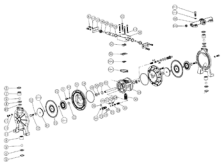

SPARE PARTS VIEW
Pag. 456





TANK SPRAY KIT:

CODE	DESCRIPTION
212496	Pump VS 36 mounted on cart
520003	Nylon tank kit 6 lt with tank, cover, return hose and L-adapter FS 1/2” in iron
886875	Double hose LP fitted FS 1/4” 7,5 m
VS503XX	Manual spray gun VS 503
	COMPLETE KIT PRICE:

SUCTION SPRAY KIT:

CODE	DESCRIPTION
212496	Pump VS 36 mounted on cart
060012	Suction system with hose Ø 13 and suction M 15x1 FS 1/2”
886875	Double hose LP fitted FS 1/4” 7,5 m
VS503XX	Manual spray gun VS 503
	COMPLETE KIT PRICE:



LOW PRESSURE MEMBRANE PUMP

SUITABLE FOR THE PAINTING OF: Industrial painting, furniture painting, plastic painting, enamels, anti-corrosion paints, polyurethane, epoxy.

VS 50

DOUBLE DIAPHRAGM PNEUMATIC PUMP MOUNTED ON CART COMPLETE WITH AIR REGULATORS AND LINE FILTER

CODE:	212495
PRESSURE RATIO:	1:1
FLOW:	50 lt/min
OPERATING PRESSURE:	2 - 8 bar



PRESSURE REDUCER
Cod. RPR500
€ 90,00



DIAPHRAGM
Cod. PB0032

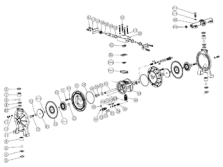

SPARE PARTS VIEW
Pag. 457





TANK SPRAY KIT:

CODE	DESCRIPTION
212495	Pump VS 50 mounted on cart
520003	Nylon tank kit 6 lt with tank, cover, return hose and L-adapter FS 1/2” in iron
886875	Double hose LP fitted FS 1/4” 7,5 m
VS503XX	Manual spray gun VS 503
	COMPLETE KIT PRICE:

SUCTION SPRAY KIT:

CODE	DESCRIPTION
212495	Pump VS 50 mounted on cart
060012	Suction system with hose Ø 13 and suction M 15x1 FS 1/2”
886875	Double hose LP fitted FS 1/4” 7,5 m
VS503XX	Manual spray gun VS 503
	COMPLETE KIT PRICE:



LOW PRESSURE MEMBRANE PUMP

MADE IN ITALY

SUITABLE FOR THE PAINTING OF: Industrial painting, furniture painting, plastic painting, enamels, anti-corrosion paints, polyurethane, epoxy.



PRESSURE REDUCER
Cod. RPR500
€ 195,00

VS 25

DOUBLE DIAPHRAGM PNEUMATIC PUMP MOUNTED ON CART COMPLETE WITH AIR REGULATORS AND LINE FILTER

CODE:	212403
PRESSURE RATIO:	1:1.5
FLOW:	25 lt/min
OPERATING PRESSURE:	2 - 8 bar



PUMP ONLY VS25
Cod. 212404
Price: **€ 780,00**



DIAPHRAGM
Cod. 25005

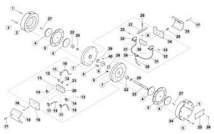

SPARE PARTS VIEW
Pag. 462



TANK SPRAY KIT:

CODE	DESCRIPTION
212403	Pump VS 25 mounted on cart
520005	Nylon tank kit 6 lt with tank, cover, return hose and L-adapter FS 3/4" in iron
886875	Double hose LP fitted FS 1/4" 7,5 m
VS503XX	Manual spray gun VS 503
	COMPLETE KIT PRICE:

SUCTION SPRAY KIT:

CODE	DESCRIPTION
212403	Pump VS 25 mounted on cart
0603412	Suction system with hose Ø 19 and suction M 1/2" FS 3/4"
886875	Double hose LP fitted FS 1/4" 7,5 m
VS503XX	Manual spray gun VS 503
	COMPLETE KIT PRICE:



LOW PRESSURE MEMBRANE PUMP

MADE IN ITALY

SUITABLE FOR THE PAINTING OF: Industrial painting, furniture painting, plastic painting, enamels, water-based enamels, anti-corrosion paints, polyurethane, epoxy.

VS 25 WH

DOUBLE DIAPHRAGM PNEUMATIC PUMP MOUNTED ON CART COMPLETE WITH AIR REGULATORS AND LINE FILTER

CODE:	WH212403
PRESSURE RATIO:	1:1.5
FLOW:	25 lt/min
OPERATING PRESSURE:	2 - 8 bar

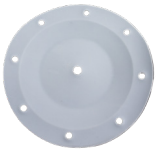

DIAPHRAGM
Cod. 25005

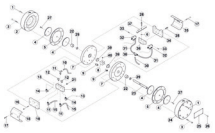

SPARE PARTS VIEW
Pag. 462



FOR WATER BASED PAINTS



TANK SPRAY KIT:

CODE	DESCRIPTION
WH212403	Pump VS 25 WH mounted on cart
520005	Nylon tank kit 6 lt with tank, cover, return hose and L-adapter FS 3/4” in iron
816075	Double hose LP 6.5x10 + 8x11 fitted FS 1/4” + 3/8” 7,5 m
VS603XX	Manual spray gun VS 603
COMPLETE KIT PRICE:	

SUCTION SPRAY KIT:

CODE	DESCRIPTION
WH212403	Pump VS 25 WH mounted on cart
0803412	Suction system in s. steel with hose Ø 19 and suction M 1/2” FS 3/4”
816075	Double hose LP 6.5x10 + 8x11 fitted FS 1/4” + 3/8” 7,5 m
VS603XX	Manual spray gun VS 603
COMPLETE KIT PRICE:	



LOW PRESSURE MEMBRANE PUMP

MADE IN ITALY

SUITABLE FOR THE PAINTING OF: Industrial painting, furniture painting, plastic painting, enamels, water-based enamels, anti-corrosion paints, polyurethane, epoxy.

VS 25 INOX

DOUBLE DIAPHRAGM PNEUMATIC PUMP MOUNTED ON CART COMPLETE WITH AIR REGULATORS AND LINE FILTER

CODE:	21249525INOX
PRESSURE RATIO:	1:1
FLOW:	25 lt/min
OPERATING PRESSURE:	2 - 8 bar

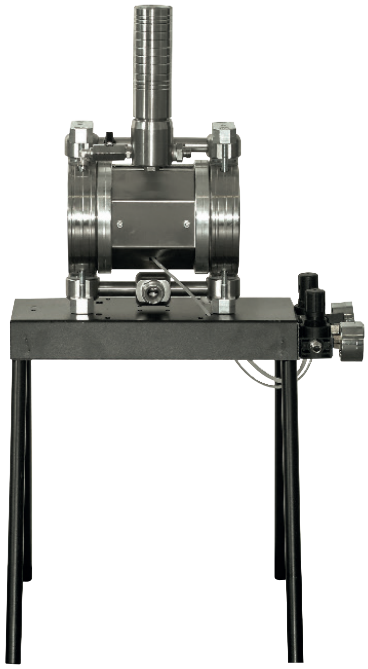

PUMP ONLY
INOX VS25
Cod. 212404IN
Price: **€ 1.150,00**

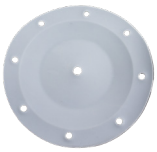

DIAPHRAGM
Cod. 25005

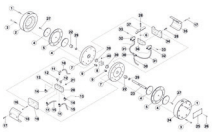

SPARE PARTS VIEW
Pag. 463







TANK SPRAY KIT:

CODE	DESCRIPTION
21249525INOX	Pump VS 25 INOX mounted on support
520005	Nylon tank kit 6 lt with tank, cover, return hose and L-adapter FS 3/4" in iron
816075	Double hose LP 6.5x10 + 8x11 fitted FS 1/4" + 3/8" 7,5 m
VS603XX	Manual spray gun VS 603
	COMPLETE KIT PRICE:

SUCTION SPRAY KIT:

CODE	DESCRIPTION
21249525INOX	Pump VS 25 INOX mounted on support
0803412	Suction system in s. steel with hose Ø 19 and suction M 1/2" FS 3/4"
816075	Double hose LP 6.5x10 + 8x11 fitted FS 1/4" + 3/8" 7,5 m
VS603XX	Manual spray gun VS 603
	COMPLETE KIT PRICE:





LOW PRESSURE MEMBRANE PUMP

MADE IN ITALY

SUITABLE FOR THE PAINTING OF: Industrial painting, furniture painting, plastic painting, enamels, anti-corrosion paints, polyurethane, epoxy.

VS 25 CAV

DOUBLE DIAPHRAGM PNEUMATIC PUMP MOUNTED ON CART COMPLETE WITH AIR REGULATORS AND LINE FILTER

CODE:	212403CAV
PRESSURE RATIO:	1:1.5
FLOW:	25 lt/min
OPERATING PRESSURE:	2 - 8 bar

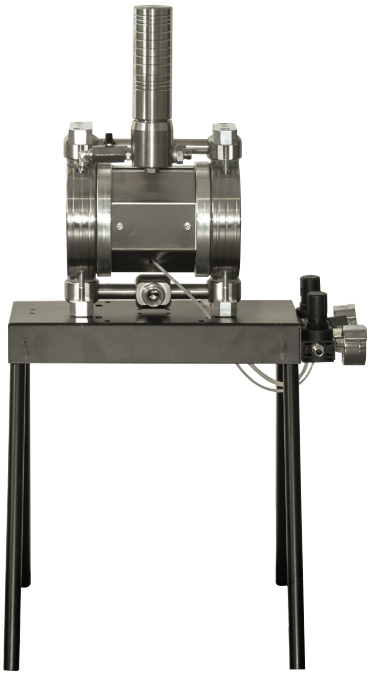



PRESSURE REDUCER
Cod. RPR500
€ 195,00



DIAPHRAGM
Cod. 25005

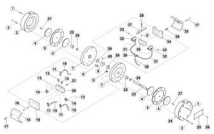

SPARE PARTS VIEW
Pag. 462







TANK SPRAY KIT:

CODE	DESCRIPTION
212403CAV	Pump VS 25 mounted on cart
520005	Nylon tank kit 6 lt with tank, cover, return hose and L-adapter FS 3/4" in iron
886875	Double hose LP fitted FS 1/4" 7,5 m
VS503XX	Manual spray gun VS 503
	COMPLETE KIT PRICE:

SUCTION SPRAY KIT:

CODE	DESCRIPTION
212403CAV	Pump VS 25 mounted on cart
0803412	Suction system with hose Ø 19 and suction M 1/2" FS 3/4"
886875	Double hose LP fitted FS 1/4" 7,5 m
VS503XX	Manual spray gun VS 503
	COMPLETE KIT PRICE:





LOW PRESSURE MEMBRANE PUMP

MADE IN ITALY

SUITABLE FOR THE PAINTING OF Industrial painting, furniture painting, plastic painting, enamels, anti-corrosion paints, polyurethane, epoxy.

VS 36 CAV

DOUBLE DIAPHRAGM PNEUMATIC PUMP MOUNTED ON CART COMPLETE WITH AIR REGULATORS AND LINE FILTER

CODE:	212496CAV
PRESSURE RATIO:	1:1
FLOW:	36 lt/min
OPERATING PRESSURE:	2 - 8 bar



PRESSURE REDUCER
Cod. RPR500
€ 195,00



DIAPHRAGM
Cod. PB0029

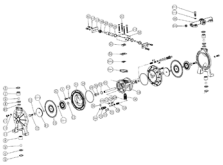

SPARE PARTS VIEW
Pag. 456



TANK SPRAY KIT:







CODE	DESCRIPTION
212496CAV	Pump VS 36 mounted on cart
520003	Nylon tank kit 6 lt with tank, cover, return hose and L-adapter FS 1/2” in iron
886875	Double hose LP fitted FS 1/4” 7,5 m
VS503XX	Manual spray gun VS 503
	COMPLETE KIT PRICE:

SUCTION SPRAY KIT:

CODE	DESCRIPTION
212496CAV	Pump VS 36 mounted on cart
060012	Suction system with hose Ø 13 and suction M 15x1 FS 1/2”
886875	Double hose LP fitted FS 1/4” 7,5 m
VS503XX	Manual spray gun VS 503
	COMPLETE KIT PRICE:





LOW PRESSURE MEMBRANE PUMP

MADE IN ITALY

SUITABLE FOR THE PAINTING OF: Industrial painting, furniture painting, plastic painting, enamels, anti-corrosion paints, polyurethane, epoxy.

VS 50 CAV

DOUBLE DIAPHRAGM PNEUMATIC PUMP MOUNTED ON CART COMPLETE WITH AIR REGULATORS AND LINE FILTER

CODE:	212495CAV
PRESSURE RATIO:	1:1
FLOW:	50 lt/min
OPERATING PRESSURE:	2 - 8 bar



PRESSURE REDUCER
Cod. RPR500
€ 195,00

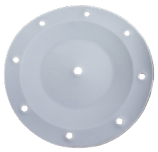

DIAPHRAGM
Cod. 25005

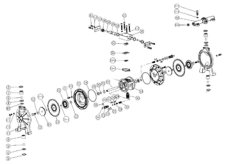

SPARE PARTS VIEW
Pag. 457



TANK SPRAY KIT:







CODE	DESCRIPTION
212495CAV	Pump VS 50 mounted on cart
520003	Nylon tank kit 6 lt with tank, cover, return hose and L-adapter FS 1/2” in iron
886875	Double hose LP fitted FS 1/4” 7,5 m
VS503XX	Manual spray gun VS 503
COMPLETE KIT PRICE:	

SUCTION SPRAY KIT:

CODE	DESCRIPTION
212495CAV	Pump VS 50 mounted on cart
060012	Suction system with hose Ø 13 and suction M 15x1 FS 1/2”
886875	Double hose LP fitted FS 1/4” 7,5 m
VS503XX	Manual spray gun VS 503
COMPLETE KIT PRICE:	





LOW PRESSURE MEMBRANE PUMP

SUITABLE FOR THE PAINTING OF: Industrial painting, furniture painting, plastic painting, enamels, water-based enamels, anti-corrosion paints, polyurethane, epoxy.

VS 36 INOX

DOUBLE DIAPHRAGM PNEUMATIC PUMP IN STAINLESS STEEL MOUNTED ON CART COMPLETE WITH AIR REGULATORS AND LINE FILTER

CODE:	36VS001
PRESSURE RATIO:	1:1
FLOW:	36 lt/min
OPERATING PRESSURE:	2 - 8 bar



PRESSURE REDUCER
Cod. RPR500
€ 195,00



DIAPHRAGM
Cod. PB0029





TANK SPRAY KIT:

CODE	DESCRIPTION
36VS001	Pump VS 36 INOX mounted on cart
520003i	Nylon tank kit 6 lt with tank, cover, return hose and L-adapter FS 1/2” s.steel
886875	Double hose LP fitted FS 1/4” 7,5 m
VS503XX	Manual spray gun VS 503
COMPLETE KIT PRICE:	

SUCTION SPRAY KIT:

CODE	DESCRIPTION
36VS001	Pump VS 36 INOX mounted on cart
080012	Stainless steel paint suction system with hose Ø 13 and suction M 15x1 FS 1/2”
886875	Double hose LP fitted FS 1/4” 7,5 m
VS503XX	Manual spray gun VS 503
COMPLETE KIT PRICE:	



LOW PRESSURE MEMBRANE PUMP

SUITABLE FOR THE PAINTING OF: Industrial painting, furniture painting, plastic painting, enamels, anti-corrosion paints, polyurethane, epoxy.

VS 50 INOX

DOUBLE DIAPHRAGM PNEUMATIC PUMP IN STAINLESS STEEL MOUNTED ON CART COMPLETE WITH AIR REGULATORS AND LINE FILTER

CODE:	50VS001
PRESSURE RATIO:	1:1
FLOW:	36 lt/min
OPERATING PRESSURE:	2 - 8 bar



PRESSURE REDUCER
Cod. RPR500
€ 195,00



DIAPHRAGM
Cod. PB0032





TANK SPRAY KIT:

CODE	DESCRIPTION
50VS001	Pump VS 50 INOX mounted on cart
520003i	Nylon tank kit 6 lt with tank, cover, return hose and L-adapter FS 1/2” s.steel
886875	Double hose LP fitted FS 1/4” 7,5 m
VS503XX	Manual spray gun VS 503
	COMPLETE KIT PRICE:

SUCTION SPRAY KIT:

CODE	DESCRIPTION
50VS001	Pump VS 50 INOX mounted on cart
080012	Stainless steel paint suction system with hose Ø 13 and suction M 15x1 FS 1/2”
886875	Double hose LP fitted FS 1/4” 7,5 m
VS503XX	Manual spray gun VS 503
	COMPLETE KIT PRICE:



LOW PRESSURE MEMBRANE PUMP

MADE IN ITALY

SUITABLE FOR THE PAINTING OF: Industrial painting, furniture painting, plastic painting, enamels, anti-corrosion paints, polyurethane, epoxy.

VS 28 3:1

DOUBLE DIAPHRAGM PNEUMATIC PUMP MOUNTED ON CART COMPLETE WITH AIR REGULATORS AND LINE FILTER

CODE:	212495-3-1
PRESSURE RATIO:	3:1
FLOW:	20 lt/min
OPERATING PRESSURE:	3 - 24 bar



DIAPHRAGM
Cod. 28005L

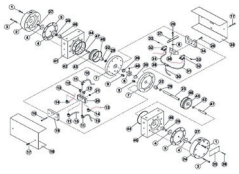

SPARE PARTS VIEW
Pag. 465





TANK SPRAY KIT:

CODE	DESCRIPTION
212495-3-1	Pump VS 28 3:1 mounted on cart
520004	Nylon tank kit 6 lt with tank, cover, return hose and U-adapter FS 3/4”
771675	Double hose HP 1/4” + LP 6x8 s. steel fittings FG 3/8” 7,5 m
VS603XX	Manual spray gun VS 603
COMPLETE KIT PRICE:	

SUCTION SPRAY KIT:

CODE	DESCRIPTION
212495-3-1	Pump VS 28 3:1 mounted on cart
0834912	S. steel paint suction system with hose Ø 19 and suction M 1/2” FS 3/4” 90°
771675	Double hose HP 1/4” + LP 6x8 s. steel fittings FG 3/8” 7,5 m
VS603XX	Manual spray gun VS 603
COMPLETE KIT PRICE:	



LOW PRESSURE MEMBRANE PUMP

MADE IN ITALY

SUITABLE FOR THE PAINTING OF: Industrial painting, furniture painting, plastic painting, enamels, water-based enamels, anti-corrosion paints, polyurethane, epoxy.

VS 28 3:1 INOX

DOUBLE DIAPHRAGM PNEUMATIC PUMP IN STAINLESS STEEL MOUNTED ON CART COMPLETE WITH AIR REGULATORS AND LINE FILTER

CODE:	212495A-3-1
PRESSURE RATIO:	3:1
FLOW:	20 lt/min
OPERATING PRESSURE:	3 - 24 bar



DIAPHRAGM
Cod. 28005L

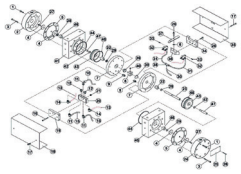

SPARE PARTS VIEW
Pag. 465





TANK SPRAY KIT:

CODE	DESCRIPTION
212495A-3-1	Pump VS 28 3:1 INOX mounted on cart
520004	Nylon tank kit 6 lt with tank, cover, return hose and U-adapter FS 3/4" s.steel
771675	Double hose HP 1/4" + LP 6x8 s. steel fittings FG 3/8" 7,5 m
VS603XX	Manual spray gun VS 603
	COMPLETE KIT PRICE:

SUCTION SPRAY KIT:

CODE	DESCRIPTION
212495A-3-1	Pump VS 28 3:1 INOX mounted on cart
0834912	S. steel paint suction system with hose Ø 19 and suction M 1/2" FS 3/4" 90°
771675	Double hose HP 1/4" + LP 6x8 s. steel fittings FG 3/8" 7,5 m
VS603XX	Manual spray gun VS 603
	COMPLETE KIT PRICE:



LOW PRESSURE MEMBRANE PUMP

MADE IN ITALY

SUITABLE FOR THE PAINTING OF: Industrial painting, furniture painting, plastic painting, enamels, anti-corrosion paints, polyurethane, epoxy.

VS K1

DOUBLE DIAPHRAGM PNEUMATIC PUMP MOUNTED ON CART COMPLETE WITH AIR REGULATORS AND LINE FILTER

CODE:	PROMO300318
PRESSURE RATIO:	1:1
FLOW:	10 lt/min
OPERATING PRESSURE:	2 - 8 bar



PRESSURE REDUCER
Cod. RPR500
€ 195,00



DIAPHRAGM
Cod. 25005K1

SPARE PARTS VIEW
Pag. 467





TANK SPRAY KIT:

CODE	DESCRIPTION
PROMO300318	Pump VS K1 mounted on cart
520001RTBP	Nylon tank kit 6 lt with tank, cover and return hose
886875	Double hose LP fitted FS 1/4” 7,5 m
300014C	Stainless steel gun fi lter holder FS 1/4” x M 1/4” BENT
VS503XX	Manual spray gun VS 503

COMPLETE KIT PRICE:

SUCTION SPRAY KIT:

CODE	DESCRIPTION
PROMO300318	Pump VS K1 mounted on cart
163629	Paint suction system with hose Ø 13 and suction M 15x1 FS 36x2 90°
886875	Double hose LP fitted FS 1/4” 7,5 m
300014C	Stainless steel gun fi lter holder FS 1/4” x M 1/4” BENT
VS503XX	Manual spray gun VS 503

COMPLETE KIT PRICE:





VS25 COMBI PLUS

Compact with compressor, it allows easy transportation to the construction site.

IDEAL FOR: Paintings, doors, iron railings, radiators and plastic
AREAS OF USE: Industrial coatings, inorganic galvanisers, polyurethane paints, epoxy paints and iron



CODE	DESCRIPTION
212403COMBIPLUS	vs25 pump with compressor
520005	6 litre tank kit complete with return pipe and L adapter FG 3/4’
VS60315	VS603 Hand Airbrush Ø1.5
886810	Low pressure twin hose FG 1/4’ Ø6x8 mt.10

GYROSCOPIC MIXER

MADE IN ITALY

This fully automaticgyroscopic mixer is the perfect solution for fast and homogeneus mixing of paint and similar materials. This unit automatically clamps the product can adjusting the clamping force and the mixing speed according to the inserted can characteristics.





Control panel



Automatic
clamping block

Mixer HS-5B

CODE	HS23000-5B
Mixing time	from 1 to 10 minutes
Cans capacity	up to 25 Litres
Max. can weight	up to 35 kg
Maximum load	150 Gpm for small cans 100 Gpm for big cans
Tightening ratio	from 60 to 450 mm
Max cans dimensions	H 450 mm x ø 330 mm
Power supply	Single-phase 230 V - 50Hz
Motor	Single-phase 750 W
Net weight	170 kg
Size (PxLxH)	800x760x1000
Noise level	< 70 dB (A)

Mixer HS-5L

CODE	HS24000-5L
Mixing time	from 1 to 10 minutes
Cans capacity	up to 35 Litres
Max. can weight	up to 40 kg
Maximum load	150 Gpm for small cans 100 Gpm for big cans
Tightening ratio	from 60 to 460 mm
Max cans dimensions	H 460 mm x ø 365 mm
Power supply	Single phase 230 V - 50Hz
Motor	Single phase 750 W
Net weight	190 kg
Size (PxLxH)	810x840x1080
Noise level	< 70 dB (A)

AUTOMATIC SHAKER

MADE IN ITALY

This automatic shaker is the perfect solution for fast and homogeneous mixing of paint and coating materials. This unit automatically blocks the product and can adjust the clamping force and the increase in mixing according to the size of the inserted can.





Control panel



Automatic
clamping block

Technical features:

Mixing time	from 1 to 10 minutes	Max cans dimensions	H 410 mm x ø 330 mm
Cans capacity	up to 25 Litres	Power supply	Single phase 230 V - 50Hz
Maximum load	up to 30 kg	Motor	Single phase 750 W
Shaking frequency	650 pulses/min	Net weight	212 kg
Can height range	from 60 to 410 mm	Size (HxWxD)	750x730x1050
		Noise level	< 70 dB (A)

CODE	DESCRIPTION
HS23000-3T	Automatic shaker for cans up to 410mm

SOLVENT REGENERATOR

MADE IN ITALY

Solvent regenerator
MANUAL VERSION

CODE	CAPACITY	VOLTAGE AND POWER	PRODUCTIVITY
IST10M	10 LT	230V / 1.6 Kw	AROUND 4 L/H
IST15M	15 LT	230V / 1.6 Kw	AROUND 5 L/H





Solvent regenerator
AUTOMATIC VERSION

CODE	CAPACITY	VOLTAGE AND POWER	PRODUCTIVITY
IST15A	15 LT ATEX	230V / 1.6 Kw	AROUND 5 L/H
IST22A	25 LT	230V / 2.5 Kw	AROUND 6.5 L/H
IST42A	45 LT	230V / 2.5 Kw	AROUND 10 L/H
IST62A	62 LT	230V / 2.5 Kw	AROUND 15 L/H

VERSION IST15A COMPLIANT TO ATEX REGULATION

Lid Gasket

CODE	EXTERNAL DIAMETER	MATERIAL	LITERS
IST1051	220 MM	EPDM	10 lt
IST1551	270 MM	EPDM	15 lt
IST2251	340 MM	EPDM	25 lt
IST4651	420 MM	EPDM	45/62 lt

Bags for distillers
BLUE REINFORCED VERSION

CODE	LITERS	HEIGHT	LENGHT
IST1001V	10 lt	470 MM	350 MM
IST1501V	15 lt	550 MM	430 MM
IST2201V	25 lt	650 MM	540 MM
IST4201V	45 lt	700 MM	660 MM
IST6201V	62 lt	850 MM	660 MM

SPRAY GUN WASHER

MADE IN ITALY



- Manual washing with thinner
- Automatic extraction of vapors from the work area
- Pre-wash with venturi pump using recirculation diluent
- Venturi pump to draw clean diluent
- Final wash with nebulizer using clean diluent
- Possibility to carry out color tests
- Completely in stainless steel
- Dimensions mm 490 x 690 x 1490 h
- ATEX II 2G

CODE	DESCRIPTION
VS230050	Manual spray gun washer VSB101

- Small size 45 x 31 x 83h cm
- 4 tanks of 5 liters each
- Dirty fluid pump for both areas (prewash)
- Nebulizer with clean liquid for both areas (final wash)
- Brush for manual washing
- Works with water plus detergent and solvent
- Wash the entire gun, nozzle, cup, filters etc.
- Produces very few exhaust fumes
- Built-in suction system
- Blow gun for drying
- Can be used inside or outside the painting booths
- 100% stainless steel

CODE	DESCRIPTION
VSLAV230059	Manual spray gun washer VSB135





- Combined, manual washing of water-based paint and thinner paint
- Automatic extraction of vapors from the work area
- Dimensions mm 990 x 690 x 1490 h

Water area

- Venturi pump for washing with recirculating liquid
- Final wash with nebulizer using clean water
- Blow gun for final drying
- Water-paint separation kit not included

Diluent zone

- Pre-wash with venturi pump using recirculation diluent
- Venturi pump to draw clean diluent
- Final wash with nebulizer using clean diluent
- Possibility to carry out color tests
- Completamente in acciaio inox
- ATEX II 2G

CODE	DESCRIPTION
VS230070	Wash airbrushes VSL10

SPRAY GUN WASHER



- Automatic and manual washing with thinner
- Automatic steam extraction from the working area
- Automatic washing by diaphragm pump using recirculation thinner
- Automatic final washing with clean diluent via second push-button operated diaphragm pump
- Venturi pump for washing with recirculation thinner
- Automatic washing cover mechanical lock during operation
- Venturi pump to draw clean diluent
- Nebulizer for final washing using clean diluent
- Pressure reducer for colour testing
- Completely in stainless steel
- Dimensions mm 692 x 685 x 1490 h
- ATEX II 2G

CODE	DESCRIPTION
VS230050M30F	Manual spray gun washer M30F



- Automatic and manual washing with thinner
- Automatic steam extraction from the working area
- Automatic washing by diaphragm pump using recirculation thinner
- Venturi pump to draw clean diluent
- Final washing with nebulizer using clean diluent
- Completely in stainless steel
- Dimensions mm 450 x 660 x 1100 h
- ATEX II 2G

CODE	DESCRIPTION
VS230050173D	Manual spray gun washer 173D

CAN CRUSHER

MADE IN ITALY

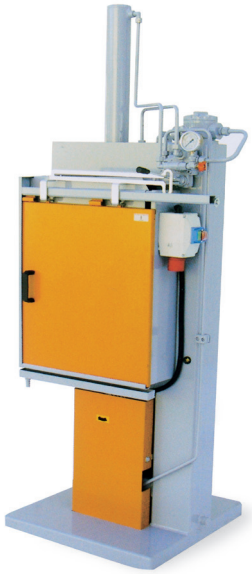

Can Crusher Hydraulic press for crushing one bin at a time

CODE	MOTOR POWER	DIMENSIONS	WEIGHT
SB4000	4000KGF / 1.7 KW	510x335x350 MM	138 KG
SB5000	6000KGF / 2.2 KW	520x375x410 MM	200 KG

IONIZING GROUP

CODE	DESCRIPTION
901000	Ionizing unit complete with Clean Easy gun with transformer and 5 m power cable
901010	Standard transformer 1.8 m with cable 5 mt power supply
901020	Clean Easy ionizing gun



SCALES



CODE	DESCRIPTION	CAPACITY	SENSIBILITY
700250	6 series ELECTRONIC balance with excellent performance, high readability and contrast backlit LCD display with 225X300mm stainless steel plate	**6 KG**	**0,1 G**
700260	6 series ELECTRONIC balance with excellent performance, high readability and contrast backlit LCD display with 225X300mm stainless steel plate	**30 KG**	**0,5 G**
700200	ELECTRONIC 6200 Series scale with backlit LCD display with high readability and contrast. Tare Automatic on the entire course with plate 160mm	**6,2 KG**	**0,01 G**
700360	ELECTRONIC scale TX series with backlit LCD display mounted on support. Tara Automatic on the entire range with plate 450x600mm	**60 KG**	**1 G**

ELECTRIC AGITATORS



High dispersion speed stirrer with 230mm manual lift

CODE	MOTOR POWER	DIMENSIONS	NO LOAD LAPS
BGD7402	220 V 750 W	480X430X570 MM	0-6000 R/MIN

50 AND 60 MM PROPELLERS INCLUDED

High speed dispersion stirrer with 520 mm electric lift

CODE	MOTOR POWER	DIMENSIONS	NO. LOAD LAPS
BGD7405	220 V 2200 W	650x600x1510 MM	100-4000 R/MIN

100 AND 120 MM PROPELLERS INCLUDED



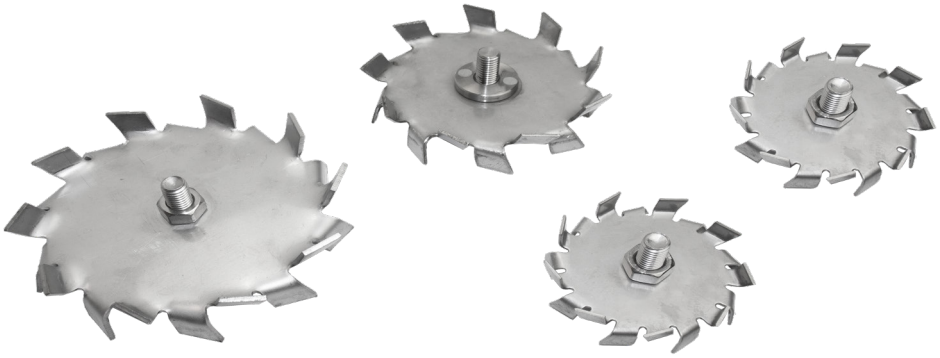

Flat propellers with central screw for electric agitators

CODE	BGD740/E1	BGD740/E2	BGD740/E3	BGD740/E4	BGD740/E5	BGD740/E6
DIAMETER	50 MM	60 MM	80 MM	100 MM	120 MM	150 MM

ELECTRIC AGITATORS

MADE IN ITALY

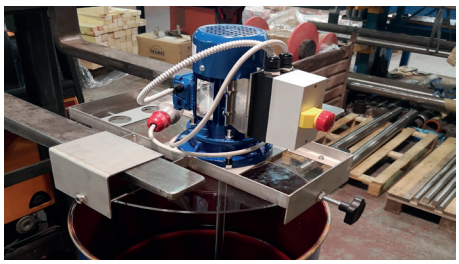



II 2G
Ex h T6 Gb
Ta=0°C to + 50°C
f. Standards: EN 1127-1:2011,
I ISO 80079-36:2016, EN ISO 80079-37:2016

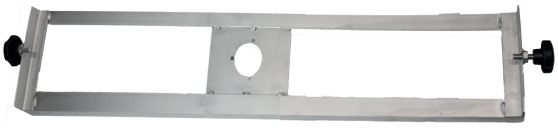

BRACKET FOR IBS TANKS



Electric mixers with adjustable speed

ALSO AVAILABLE WITH ATEX CERTIFICATES IIG

Code	Description	power	Tree size	Propeller dimensions ø
EM1037	Electric mixer complete with propeller	0,37 kW 230V	30x700 mm	marina 160 mm
EM1055	Electric mixer complete with propeller	0,55 kW 230V	30x700 mm	wide marina 300 mm
EM1075	Electric mixer complete with propeller	0,75 kW 380V	20x850 mm	marina 160 mm
EM1150	Electric mixer complete with propeller	1,50 kW 380V	30x850 mm	assiale 400 mm
ES1000	BRACKET FOR IBS TANKS 1000 lt			

VARIOUS TYPES OF SUPPORT AND CONFIGURATION AVAILABLE ON REQUEST

ELECTRIC AGITATORS FOR LARGE PRODUCTIONS



Performance agitator for 200 lt containers

code	engine power	dimensions	propeller	working height	Lift
BGD8011	380 W - 9 KW	170X80X180 mm	Ø 250-280	900 mm	180 mm

Performance agitator for 500/1000 lt containers

code	engine power	dimensions	propeller	working height	Lift
BGD8018	380 W - 25 KW	195x90x205 mm	Ø 300-320	1200 mm	210 mm

AGITATORS MOUNTED ON SUPPORT



Variable speed pneumatic agitator mounted on a height-adjustable support

CODE	MAXIMUM HEIGHT	POWER	ROD DIMENSION	PROPELLER SIZE Ø
2AM100	700 MM	1,4 CV	15X450 MM	165 MM
2AM2100	700 MM	2,5 CV	15X450 MM	165 MM
SUPP2AM	700 MM		BARE STAND	

Variable speed pneumatic agitator mounted on a height-adjustable support

CODE	MAXIMUM HEIGHT	POWER	ROD DIMENSION	PROPELLER SIZE Ø
AM3P003	795 MM	1,4 CV	12X350 MM	95 MM





Variable speed pneumatic agitator mounted on a pneumatic height-adjustable support

CODE	MAX.HEIGHT	POWER	ROD DIMENSION	PROPELLER SIZE Ø
AM4P004	580 MM	1,4 CV	12X660 MM	95 MM

Variable speed pneumatic agitator mounted on a pneumatic height-adjustable support

CODE	MAX.HEIGHT	POWER	ROD DIMENSION	PROPELLER SIZE Ø
AM5P005	660 MM	1,4 CV	12X740 MM	95 MM



AGITATORS MOUNTED ON SUPPORT

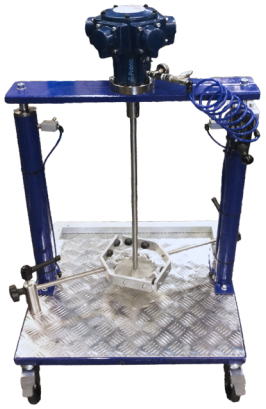

Variable speed pneumatic agitator mounted on a pneumatic height-adjustable support

CODE	MAXIMUM HEIGHT	POWER	ROD DIMENSION	PROPELLER SIZE Ø
SOLLM40	600 MM	2,5 CV	15X350 MM	160 MM

Variable speed pneumatic stainless steel agitator mounted on a height-adjustable support



CODE	MAXIMUM HEIGHT	POWER
1AM100	400 MM	1 CV



Variable speed pneumatic agitator mounted on a height-adjustable support

COMPLIANT TO ATEX REGULATION

CODE	MAXIMUM HEIGHT	POWER	ROD DIMENSION	ROD DIMENSION
GASTVSB01C	1200 MM	1 CV	14X480 MM	150 MM
GASTVSB03C	1200 MM	2 CV	14X800 MM	150 MM
GASTVSB04C	1200 MM	4CV	14X800 MM	150 MM

THE PRICE IS SUBJECT TO CHANGE

Variable speed pneumatic agitator

COMPLIANT TO ATEX REGULATION

CODE	POWER	ROD DIMENSION	PROPELLER SIZE Ø
GASTVSB01	1 CV	14X480 MM	150 MM
GASTVSB03	2 CV	14X800 MM	150 MM
GASTVSB04	4CV	14X800 MM	150 MM



CODE	DESCRIPTION
SUPPGAST25	THREE-FOOT TELESCOPIC SUPPORT WITH REMOVABLE INSERT FOR GAST STIRRERS FOR CANS UP TO 25LT
SUPPGAST200	Three-foot telescopic support with removable insert for Gast stirrers for drums up to 200Lt

PNEUMATIC AGITATORS


RB-1AVS


1AM000


RBA100


2AM000


2AM001


RB-40AVS
RB-50AVS


RB-CAVS1


A80200A

A80200

Pneumatic agitators with adjustable speed

Code	Description	Power	Rod dimension	Propeller size Ø
RB-1AVS	Pneumatic agitator with threaded base	0,5 cv	12x350 mm	95 mm
1AM000	Pneumatic agitator with 3-holes base 1AM	1 cv	8x350 mm	60 mm
RBA100	Pneumatic agitator RB-BA1 with 3 holes base	1 cv	12x350 mm	95 mm
2AM000	Pneumatic agitator RB-FA with 3-holes base 2 AM	1,4 cv	15x800 mm	165 mm
2AM001	Pneumatic agitator RB-6A with threaded base and nut	1,4 cv	12x550 mm	95 mm
RB-40AVS	Pneumatic agitator RB-40 with 5-holes base	2,5 cv	15x800 mm	165 mm
RB-50AVS	Pneumatic agitator RB-50 with 5-holes base	3 cv	15x800 mm	165 mm
RB-CAVS1	Pneumatic agitator RB-FA with bracket for drum support	1,4 cv	15x800 mm	165 mm
A80200-A	Pneumatic agitator with flange	1,4 cv	16x860 mm	190 mm
A80200	Pneumatic agitator	1,4 cv	16x440 mm	110 mm

ALL PRONA AGITATORS ARE ATEX II 3 G C IIA T2 CERTIFIED


FA107I
FA107P


RMB-1S
RMB-2B
RMB-3B


AT2AS36


FA106L


FA106N/P


FB106I

Code	Description	Shaft hole Ø	Dimension Ø
FA107i	Stainless steel marine propeller complete with screw fixing	15 mm	160 mm
FA105i	Stainless steel marine propeller complete with screw fixing	15 mm	120 mm
FA107P	Stainless steel marine propeller complete with screw fixing	12 mm	160 mm
FA105P	Stainless steel marine propeller complete with screw fixing	12 mm	120 mm
AT2AS36	Toothed stainless steel propeller with screw for agitator 1 AM	8 mm	60 mm
AT2AS361	Toothed stainless steel propeller with screw for agitator 2 AM	12 mm	100 mm
FA106L	Aluminum propeller complete with screw fixing	15 mm	165 mm
FA106N	Marine propeller in nylon complete with screw fixing	15 mm	100 mm
FA106P	Marine propeller in nylon complete with screw fixing	12 MM	100 MM
FB106I	Flat propeller with holes for stainless steel water-based paints	per screw	95 mm
RMB1S	Bell propeller	8 MM	81 MM
RMB2B	Bell propeller	12 MM	152 MM
RMB3B	Bell propeller	15 MM	152 MM

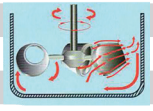

MANUAL PNEUMATIC AGITATORS

Pneumatic stirrers with handle and support for manual use

CODE	WEIGHT	POWER	SHAFT DIMENSION	PROPELLER DIMENSION Ø
RB-MA1	1,5 KG	0,5 CV	12x350 MM	95 MM
RB-MA	3 KG	1 CV	15x550 MM	60 MM
RB-MA2	7 KG	2,5 CV	15x800 MM	165 MM

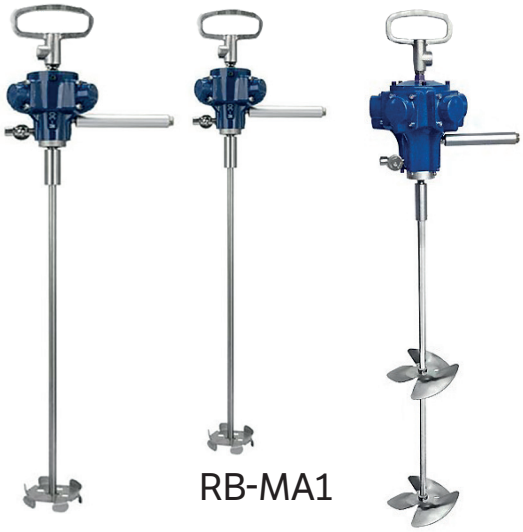

RB-MA RB-MA1 RB-MA2

AIR DRILLS AND MIXER RODS



CODE	DESCRIPTION
NA74002	REVERSIBLE PNEUMATIC DRILL 1/4"
NA74003	REVERSIBLE PNEUMATIC DRILL 3/8"

CODE	DESCRIPTION
1PLAM000	MIXER WITH PROPELLER FOR MANUAL AGITATOR 70 CM ROD 50 CM - PROPELLER H 10 CM L 10 CM
1PLEAM00	MIXER WITH PROPELLER FOR MANUAL AGITATOR 38 CM ROD 30 CM - PROPELLER H 8 CM L 8 CM

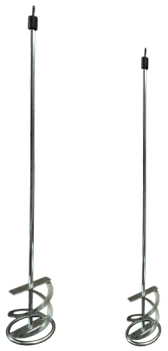

TANK COVERS



CODE	DESCRIPTION
1AMF1	GALVANIZED AVP LID FOR 25 LT Ø300MM DRUM
1AMX1	STAINLESS STEEL LID FOR 25 LT Ø350MM DRUM
2AMF1X	GALVANIZED AVP LID FOR 200 LT Ø630MM DRUM
2XAM1	STAINLESS STEEL LID FOR 200 LT Ø630MM DRUM
3SERB6B	TANK 6L WITH WHITE STIRRER
3SERB6N	TANK 6L WITH BLACK STIRRER

AGITATORS MOUNTED ON COVER

MADE IN ITALY



RB1TP



1AM10VS

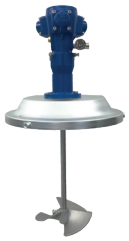

2AMRB-FA-C

Pneumatic agitator mounted on cover for 25/30 lt cans

CODE	DESCRIPTION	POWER
1AM10VS	1AM agitator on AVP lid	1 cv
2AMRB-FA-C	2AM agitator on AVP lid	1.4 cv
1AM10VSi	1AM agitator on Sainless steel lid	1 cv
RB1TP	2AM agitator on Sainless steel lid with inspection	1.4 cv
2AM20VSI	2AM agitator on Sainless steel lid	1 CV



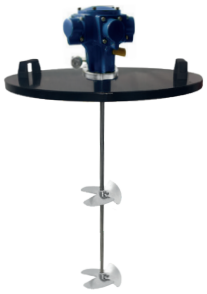

Pneumatic agitator mounted on cover for 200 lt drums

CODE	DESCRIPTION	POWER
2AMFCRBCA	Agitator 2AM on AVP cover	PRICE
25AMEB40A	Agitator RB-40 on AVP cover	2,5 cv



AVAILABLE FOR AUCTIONS
Ø12 - Ø14 - Ø15 - Ø20 - Ø25 - Ø30

Drum propellers

Code	Description
RORAG0002	3-blade vortex opening propeller for 1000lt or 200lt drums Auction Ø15 - 7 cm wide blade
RORAG0003	3-blade vortex opening propeller for 1000lt or 200lt drums Auction Ø15 - 10 cm wide blade
RORAG0004	4-blade vortex opening propeller for 1000lt or 200lt drums Auction Ø15 - 15 cm wide blade

SYSTEM OF MIXING FOR DRUMS

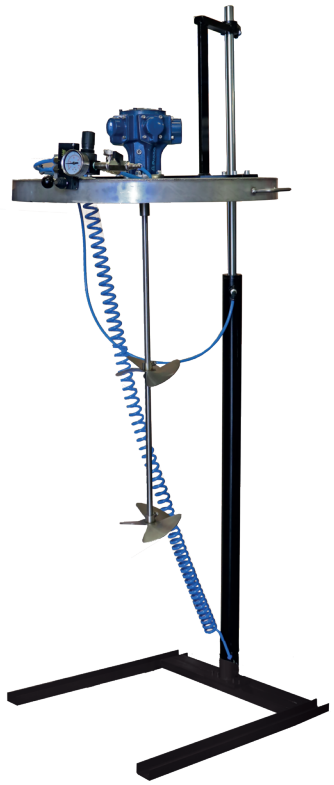

Mixing system for drums

Pneumatic lifter for 200 lt drums with control lever and support with rotating pin, bracket for fixing to the floor and front regulator

CODE	DESCRIPTION	POWER
SAF0200	Mixing system for drums with pneumatic lid lifting and RB-40 agitator	2,5 cv



Mixing system for drums

Pneumatic lift for drums from 200 lt to 1000 lt with control lever and support with rolling pin, fixing bracket to the floor and front controller.
Transfer pump and agitator RB50.

CODE	DESCRIPTION	POWER
SAF200T	Mixing system for drums from 200 lt to 1000 lt with RB50 stirrer.	3,5 cv

PAINTING SYSTEMS MOUNTED ON COVER

MADE IN ITALY



COVER FOR TANKS UP TO 25 LT IN ALUMINIUM WITH TRANSFER PUMP AND PNEUMATIC AGITATOR 1AM

CODE:	CA361AM
FLOW:	36 lt/min
PRESSURE RATIO:	1:1
OPERATING PRESSURE:	3 - 7 bar

COVER FOR TANKS UP TO 25 LT IN STAINLESS STEEL WITH TRANSFER PUMP AND PNEUMATIC AGITATOR 2AM

CODE:	CXA362AM
FLOW:	36 lt/min
PRESSURE RATIO:	1:1
OPERATING PRESSURE:	3 - 7 bar





COVER FOR TANKS UP TO 25 LT IN STAINLESS STEEL WITH PNEUMATIC AGITATOR 2AM AND 2 MT SUCTION SYSTEM FITTED FS S.STEEL FG 3/4"

CODE:	CXAP2AM

COVER FOR TANKS UP TO 25 LT IN STAINLESS STEEL WITH PNEUMATIC AGITATOR 1AM AND 2 MT SUCTION SYSTEM FITTED FS S.STEEL FG 3/4"

CODE:	CXAP1AM

TRANSFER SYSTEMS FOR BARRELS

MADE IN ITALY



COVER FOR BARRELS UP TO 200 LT IN POWEDER PAINTED STEEL WITH TRANSFER PUMP AND PNEUMATIC AGITATOR 2AM

CODE:	VS210025CAP
FLOW:	25 lt/min
PRESSURE RATIO:	1:1.5
OPERATING PRESSURE:	3 - 7 bar

COVER FOR BARRELS UP TO 200 LT IN POWEDER PAINTED STEEL WITH TRANSFER PUMP AND PNEUMATIC AGITATOR 2AM

CODE:	VS210036CAP
FLOW:	36 lt/min
PRESSURE RATIO:	1:1
OPERATING PRESSURE:	3 - 7 bar





COVER FOR BARRELS UP TO 200 LT IN POWEDER PAINTED STEEL WITH TRANSFER PUMP AND PNEUMATIC AGITATOR 2AM

CODE:	VS210050CAP
FLOW:	50 lt/min
PRESSURE RATIO:	1:1
OPERATING PRESSURE:	3 - 7 bar

COVER FOR BARRELS UP TO 200 LT IN POWEDER PAINTED STEEL WITH TRANSFER PUMP 50LT AND PNEUMATIC AGITATOR RB50AVS

CODE:	VS210050CAP
FLOW:	50 lt/min
PRESSURE RATIO:	1:1
OPERATING PRESSURE:	3 - 7 bar





COVER FOR BARRELS UP TO 200 LT IN POWEDER PAINTED STEEL WITH TRANSFER PUMP 180LT AND PNEUMATIC AGITATOR RB50AVS

CODE:	VS2131FAR1
FLOW:	180 lt/min
PRESSURE RATIO:	1:1
OPERATING PRESSURE:	3 - 7 bar

TRANSFER SYSTEMS FOR BARRELS

MADE IN ITALY



COVER FOR BARRELS UP TO 200 LT IN STAINLESS STEEL WITH TRANSFER PUMP AND PNEUMATIC AGITATOR 2AM

CODE:	VS2150FAR
FLOW:	50 lt/min
PRESSURE RATIO:	1:1
OPERATING PRESSURE:	3 - 7 bar

PAINT FILTERING GROUP



COMPLETE PAINT FILTERING GROUP ON CART

INSTALLED ON CART WITH WHEELS COMPLETE WITH TRANSFER PUMP, FILTERING GROUP WITH SET OF FILTERS IN VARIOUS MESHES, PIPES WITH HOSE AND COUPLING TO CISTERN

CODE:	FLO3ASC003
FLOW:	300 lt/min
PRESSURE RATIO:	1:1
OPERATING PRESSURE:	3 - 7 bar

POLYESTER BAG FILTER
Ø 180X430MM

CODE	MESH	MICRONS
MM070	70	200
MM0140	140	100
MM0270	270	50
MM0500	500	25
MM01250	1250	10
MM02500	2500	5
MM012000	12000	1

NYLON BAG FILTER
Ø 180X430MM

CODE	MESH	MICRONS
MM20	20	800
MM30	30	600
MM40	40	400
MM50	50	300
MM70	70	200
MM160	160	100
MM270	270	50
MM500	500	25





NEW AUTOCLAVE CLOSURE FILTER STAINLESS STEEL WITH PRESSURE MEASUREMENT GAUGE

CODE
HBXV2A500/3

TWO-COMPONENT INSTALLATIONS FOR GLUES

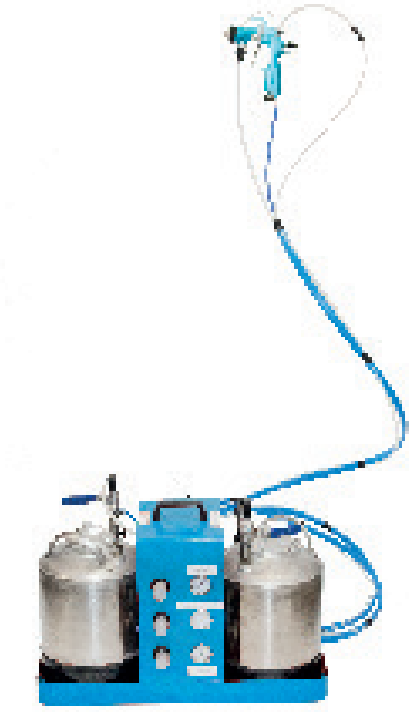

COMPLETE SYSTEM WITH MANUAL AIRBRUSH R210-1H

TWO-COMPONENT PLANT FOR GLUES

CODE	VS2150FAR14
TANKS:	10 lt
PRESSURE RATIO:	1:1
USE PRESSURE:	2 - 5 bar

NOT CERTIFIED ATEX AND PED



10 lt 5 lt

COMPLETE SYSTEM WITH MANUAL SPRAY GUN R210-1H AND LIQUID REGULATOR

TWO-COMPONENT PLANT FOR GLUES

CODE	VS2150FAR14F
TANKS:	10 lt
PRESSURE RATIO:	1:1
USE PRESSURE:	2 - 5 bar

CERTIFIED ATEX AND PED

TWO-COMPONENT INSTALLATIONS FOR GLUES



VSPRO-BI 891

CODE	FLUID NOZZLE Ø MM	PRESSURE BAR
891W08	0.8	2.0
891W10	1.0	2.0
891W20	2.0	2.0



10 lt 5 lt

COMPLETE PLANT WITH MANUAL AIRBRUSH B891 AND LIQUID REGULATOR

TWO-COMPONENT PLANT FOR GLUES

CODE	B89150FAR14F
TANKS:	10 lt
PRESSURE RATIO:	1:1
USING PRESSURE:	2 - 5 bar

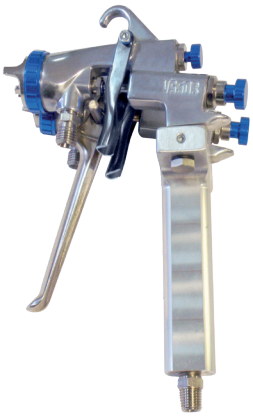



FB DOUBLE

CODE	FLUID NOZZLE Ø MM	PRESSURE BAR
FB2K08	0.8	2.0
FB2K10	1.0	2.0
FB2K13	1.3	2.0
FB2K15	1.5	2.0
FB2K18	1.8	2.0

TWO-COMPONENT INSTALLATIONS FOR GLUES



1H



2H

Manual spray gun R210-1H

Code	Fluid nozzle Ø mm	Pressure bar	Air consumption lt/min	Nozzle thin side Ømm
R2101H10	1.0	2.5	333	0.8
R2101H15	1.5	2.5	333	0.8
R2101H20	2.0	2.5	333	0.8

Manual spray gun R210-2H

Code	Fluid nozzle Ø mm	Pressure bar	Air consumption lt/min	Nozzle thin side Ømm
R2102H15	1.5	2.5	333	0.8



TWO-COMPONENT SYSTEM FOR STAINLESS STEEL GLUES WITH LIQUID REGULATOR

CODE	VS2150FAR14383
PUMP:	VS50 INOX 50 lt
PRESSURE RATIO:	1:1
USE PRESSURE:	2 - 7 bar

TWO-COMPONENT GLUE SYSTEM WITH LIQUID REGULATOR

STAINLESS STEEL CATALYST PUMP - ALUMINIUM GLUE PUMP

CODE	VS2150FAR14382
PUMP VS50 STEEL:	50 lt
PUMP VS50 ALUMINUM:	50 lt/min
PRESSURE RATIO:	1:1
USE PRESSURE:	2 - 7 bar



TWO-COMPONENT SYSTEM FOR STAINLESS STEEL GLUES

CODE	VS2150FAR1438
PUMP:	VS50 INOX 50 lt
PRESSURE RATIO:	1:1
USE PRESSURE:	2 - 7 bar



TWO-COMPONENT LOW-PRESSURE GLA GLUE GUN

Code	Fluid fitting	Sleeve	Max pressure
FB0345VSBP	1/4”	11/16”	20 Bar

ONE-COMPONENT PLANT FOR BOSTIK



ONE-COMPONENT PLANT VS50 COMPLETE WITH EXTENSION FOR DRUMS
PIPE 7.5 MT Ø9.5
AIRBRUSH VS603 SOMEONE 1,8

ONE-COMPONENT PLANT FOR BOSTIK

CODE	VS2150B00S1438
PUMPS:	VS50 50 lt
PRESSURE RATIO:	1:1
USE PRESSURE:	2 - 7 bar
PRICE:	**€ 1.200,00**



ONE-COMPONENT VS50 INOX SYSTEM COMPLETE WITH EXTENSION FOR DRUMS
PIPE 7.5 MT Ø9.5
AIRBRUSH VS603 SOMEONE 1,8

ONE-COMPONENT SYSTEM FOR STAINLESS STEEL GLUES

CODE	VS2150B00S1438IF
PUMPS:	VS25 INOX 25 lt
PRESSURE RATIO:	1:1
USE PRESSURE:	2 - 7 bar
PRICE:	**€ 1.625,00**

PNEUMATIC GLUE FEEDERS



CODE	DESCRIPTION
AT10D00P02	Pneumatic glue feeder 10 lt complete with PVC hose 5 m and straight lance
AT10D00PZ99	Pneumatic glue feeder 10 lt complete with PVC hose 5 m and gun with anatomic handle

Code	Description
AT10C15	Pneumatic glue feeder 10 lt complete with PVC hose 5 m and straight lance
AT10C250	Pneumatic glue feeder 10 lt complete with PVC hose 5 m and manual spray gun with anatomic handle





Code	Description
AT20C15	Pneumatic glue feeder 20 lt complete with PVC hose 5 m and straight lance
AT20C250	Pneumatic glue feeder 20 lt complete with PVC hose 5 m and manual spray gun with anatomic handle

Code	Description
AT40C15	Pneumatic glue feeder 40 lt complete with PVC hose 5 m and straight lance
AT40C250	Pneumatic glue feeder 40 lt complete with PVC hose 5 m and manual spray gun with anatomic handle
AT60C15	Pneumatic glue feeder 60 lt complete with PVC hose 5 m and straight lance
AT60C250	Pneumatic glue feeder 60 lt complete with PVC hose 5 m and manual spray gun with anatomic handle



PNEUMATIC GLUE FEEDERS



CODE	DESCRIPTION
AT25005	Release agent application system with 2 lt tank under pressure, 3mt double hose and MRS-F 0.5 mm gun



CODE	DESCRIPTION
AT10E0002	Stainless steel pneumatic glue feeder 10 lt complete with PVC hose 5 m and straight lance
AT10E00P99	Stainless steel pneumatic glue feeder 10 lt complete with PVC hose 5 m and manual spray gun with anatomic handle



CODE	DESCRIPTION
AT20E0002	Stainless steel pneumatic glue feeder 20 lt complete with PVC hose 5 m and straight lance
AT20E00P99	Stainless steel pneumatic glue feeder 20 lt complete with PVC hose 5 m and manual spray gun with anatomic handle



CODE	DESCRIPTION
AT40E0002	Stainless steel pneumatic glue feeder 20 lt complete with PVC hose 5 m and straight lance
AT40E00P99	Stainless steel pneumatic glue feeder 20 lt complete with PVC hose 5 m and manual spray gun with anatomic handle

ACCESSORIES FOR GLUES



CODE	DESCRIPTION
VSGB201	Manual gun with adjustable flow regulation, complete with universal nozzle



CODE	DESCRIPTION
VSGBA02	Manual gun in aluminium with adjustable flow, complete with universal nozzle



CODE	DESCRIPTION
VSGB201CH	Gun for aggressive chemicals / Bostik



CODE	DESCRIPTION
VSGB9902	Manual gun in aluminium with adjustable flow regulation and anatomic handle



CODE	DESCRIPTION
VSGB287	Alluminium glue spreader with rubber rollers- width 180 mm
VSGBV70	Alluminium glue spreader with rubber rollers- width 70 mm



CODE	DESCRIPTION
VSBG305MOC	short head injector, brass body Ø 0,4-0,6-0,8-1,0-1,2-1,5
VSBG305MOL	long head injector, brass body Ø 0,4-0,6-0,8-1,0-1,2-1,5
VSBG305MIC	short head injector, s.steel body Ø 0,4-0,6-0,8-1,0-1,2-1,5
VSBG305MIL	long head injector, s.steel body Ø 0,4-0,6-0,8-1,0-1,2-1,5

- Injectors suitable for glues with low and medium viscosity.
- Available version with different nozzle types.
- Thanks to the double effect, the inner stem provide a fast andprecise flow rate cycle (opening and closing)
- The injectors with integrated solenoid valve have a high response speed in the dispensing cycle



CODE	DESCRIPTION
VSGB9903	Adjustable flow plastic hand gun with anatomical handle

ACCESSORIES FOR GLUES

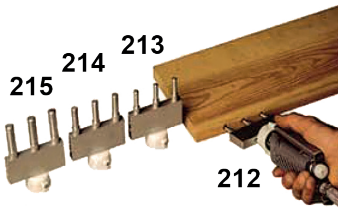

CODE	DESCRIPTION
VSBG212	Triple nozzle for plug holes distance between each plug 32 mm on request different distances Ø 6x20
VSBG213	Triple nozzle for plug holes distance between each plug 32 mm on request different distances Ø 8x25
VSBG214	Triple nozzle for plug holes distance between each plug 32 mm on request different distances Ø 10x30
VSBG215	Triple nozzle for plug holes distance between each plug 32 mm on request different distances Ø 12x40



ART. 227

CODE	DESCRIPTION
VSBG227	Nozzles for multiple grooves, supplied with drawing or wood sample, adjustable width.



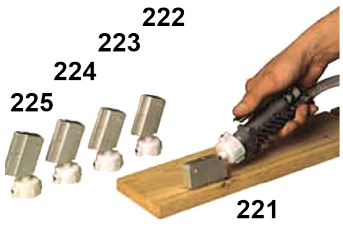

CODE	DESCRIPTION
VSBG228	Nozzle for slots 20
VSBG230	Nozzle for slots 30
VSBG229/B	Nozzle for slots 40
VSBG229/5	Nozzle for slots 50

CODE	DESCRIPTION
VSBG221	Grooves nozzle for upper dispensing Ø 4x30
VSBG222	Grooves nozzle for upper dispensing Ø 5x30
VSBG223	Grooves nozzle for upper dispensing Ø 6x30
VSBG224	Grooves nozzle for upper dispensing Ø 8x30
VSBG225	Grooves nozzle for upper dispensing Ø 10x30

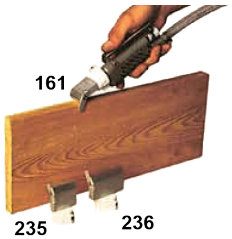

ART. 226



CODE	DESCRIPTION
VSBG235	Edges nozzle with adjustable width from 10 to 30
VSBG236	Edges nozzle with adjustable width from 20 to 40
VSBG161	Edges nozzle with adjustable width from 40 to 60

CODE	DESCRIPTION
VSBG226	Nozzle for lammellar joints, for lammellars for 0 – 10 – 20

ACCESSORIES FOR GLUES

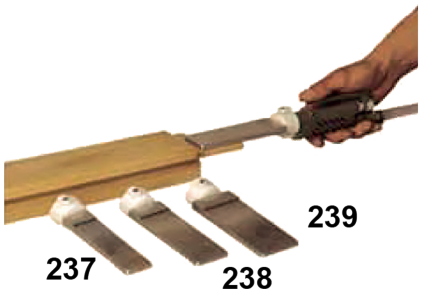

CODE	DESCRIPTION
VSBG237	Universal spatula with one-side dispenser 100x30x6
VSBG238	Universal spatula with one-side dispenser 100x40x6
VSBG239	Universal spatula with one-side dispenser 100x500x6

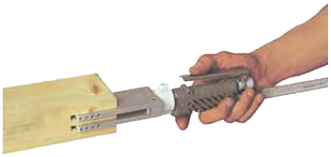

CODE	DESCRIPTION
VSBG258	Male nozzle for double tenons different size available on request

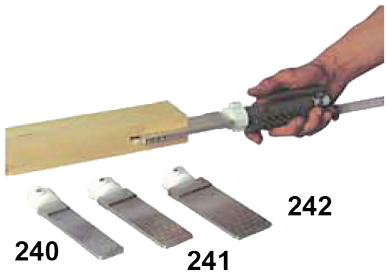

CODE	DESCRIPTION
VSBG240	Universal two-sided dispensing spatulas 100x30x6
VSBG241	Universal two-sided dispensing spatulas 100x40x6
VSBG242	Universal two-sided dispensing spatulas 100x50x6



CODE	DESCRIPTION
VSBG264	Female nozzle for double tenons different size available on request

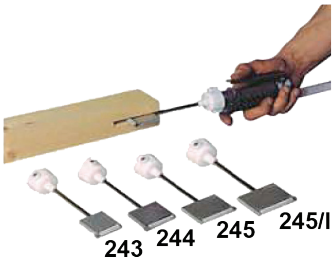

CODE	DESCRIPTION
VSBG243	Spatula with roll for internal and external application 30 Ø 7
VSBG244	Spatula with roll for internal and external application 40 Ø 7
VSBG245	Spatula with roll for internal and external application 50 Ø 7
VSBG245/I	Spatula with roll for internal and external application 60 Ø 7

ACCESSORIES FOR GLUES



CODE	DESCRIPTION
VSBG270	Brush nozzles Ø 10
VSBG272	Brush nozzles Ø 25
VSBG273	Brush nozzles Ø 36
VSBG274	Brush nozzles Ø 40

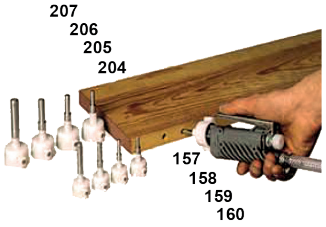

CODE	DESCRIPTION
VSBG204	Nozzle for plug holes Ø 6x20
VSBG205	Nozzle for plug holes Ø 8x25
VSBG206	Nozzle for plug holes Ø 10x30
VSBG207	Nozzle for plug holes Ø 12x40

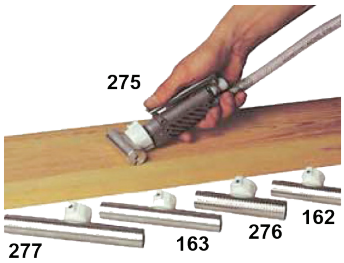

CODE	DESCRIPTION
VSBG275	Nozzles for flat surfaces Width 72
VSBG276	Nozzles for flat surfaces Width 120
VSBG277	Nozzles for flat surfaces Width 180

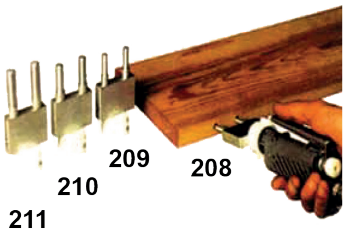

CODE	DESCRIPTION
VSBG208	Double nozzles for plug holes distance between centers 32 mm on request different distance Ø 6x20
VSBG209	Double nozzles for plug holes distance between centers 32 mm on request different distance Ø 8x25
VSBG210	Double nozzles for plug holes distance between centers 32 mm on request different distance Ø 10x30
VSBG211	Double nozzles for plug holes distance between centers 32 mm on request different distance Ø 12x40



CODE	DESCRIPTION
VSBG202	Universal interlocking nozzle
VSBG003	Universal threaded nozzle





CODE	DESCRIPTION
VSBG295	Plastic gun housing
VSBG991	Glue gun container support
VSBGR5	Nylon fitting with holes
VSBGR6	Nylon fitting



CODE	DESCRIPTION
VSBG203	Adjustable guide support for universal nozzle

ACCESSORIES FOR GLUES



ART. 299

CODE	DESCRIPTION	PRICE
VSBG299	Nylon hose strengthened 4 mt with fittings	€ 36,00



CODE	DESCRIPTION
VSBG297	Glue container for 8 lt dispenser
VSBG298	Glue container for 12 lt dispenser
VSBG187	CGlue container for 20 lt dispenser



INTERLOCKING MALE



MALE THREAD

CODE	DESCRIPTION
VSBG306-G/P	Female adaptor interlocking to male thread
VSBG307-P/G	Female adapter thread to interlocking male

THE ORANGE ROLL IS IN FOAM,
IDEAL FOR POROUS AND/OR WAVY SURFACES.
THE GREY ROLL IS IN RUBBER,
IDEAL FOR SMOOTH AND PLAN SURFACES

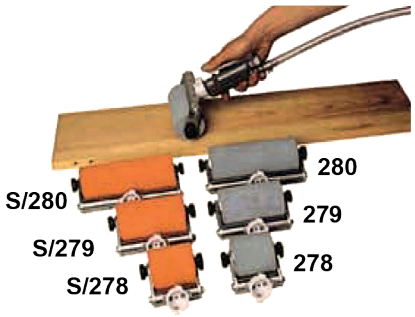



CODE	DESCRIPTION
VSBG278	Nozzles with rubber roller for surfaces width 72
VSBG279	Nozzles with rubber roller for surfaces width 120
VSBG280	Nozzles with rubber roller for surfaces width 180
VSBGS/278	Nozzles with foam roller for surfaces width 70
VSBGS/279	Nozzles with foam roller for surfaces width 120
VSBGS/280	Nozzles with foam roller for surfaces width 180
VSBG281	Spare rubber roller for surfaces width 72
VSBG282	Spare rubber roller for surfaces width 120
VSBG283	Spare rubber roller for surfaces width 180
VSBG284	Spare foam roller for surfaces width 72
VSBG285	Spare foam roller for surfaces width 120
VSBG286	Spare foam roller for surfaces width 180
VSBGP/284	Spare pin for rollers 72
VSBGP/285	Spare pin for rollers 120
VSBGP/286	Spare pin for rollers 180

PRESSURE TANKS



Certificate

Module A2

according to Directive 2014/68/EU

Certificate No.: 01 202 CHN/Ü-190008

Name and address of the manufacturer: **Foshan Nanhai Ding Rong Air Tool Industry Co., Ltd.** No. 6 ShunjingRoad, Hegui Industrial Zone, Lishui Town, Nanhai District, Foshan City, Guangdong Province, 528241, P.R. China

According to the test results, the manufacturer is entitled to mark the pressure equipment produced within the range of this module with the mark:

CE 0035

Tested according to Directive 2014/68/EU: **Module A2** – Internal production control plus supervised pressure equipment checks at random intervals

Test report no.: CHN/Ü-190008

Description of pressure equipment: 10L~20L Pressure Tank in Catogry I, 40L~100L Pressure Tank in Catogry II,

according to Drawing No.: RT10L.C Rev.0, RT10L.S Rev.0, RT20L.C Rev.0, RT20L.S Rev.0, RT40L.C Rev.0, RT40L.S Rev.0, RT60L.C Rev.0, RT60L.S Rev 0 RT80L.C Rev.0, RT80L.S Rev.0, RT100L.C Rev.0, RT100L.S Rev.0

Manufacturing plant/Supplier: **Foshan Nanhai Ding Rong Air Tool Industry Co., Ltd.** No. 6 ShunjingRoad, Hegui Industrial Zone, Lishui Town, Nanhai District, Foshan City, Guangdong Province, 528241, P.R. China

During the periodical monitoring, compliance with the directive has been demonstrated.

Shanghai, September 29, 2019 Jack Wang

TÜV Rheinland Industrie Service GmbH
Notified Body for Pressure Equipment, ID-No. 0035
Am Grauen Stein, D-51105 Koln, GERMANY

TÜV Building, No 177, Lane 777
West Guangzhong Road, Zhabei District, Shanghai, China
Tel:+86-21/6108-1188 Fax:+86-21/6108-1199
E-mail: service-gd@tuv.com

D-014-E-Rev21

www.tuv.com

TÜVRheinland®
Precisely Right.

THE PRESSURE TANKS OF VAL SPRAY LINE COMPLY WITH THE "PED" REGULATION: THE DIRECTIVE CONCERNING THE DISTRIBUTION ON THE MARKET OF PRESSURE EQUIPMENT: 2014/68/EU

OUR TANKS ARE CERTIFIED FOR USE WITH MAXIMUM PRESSURE UP TO 7BAR



Certificate

TÜVRheinland®

Certificate No: SEP154149716-1

Name and address of the manufacturer: **Foshan Nanhai Ding Rong Air Tool Industry Co., Ltd.** No. 6 Shunjing Road, Hegui Industrial Zone, Lishui Town, Nanhai District, Foshan City, Guangdong Province, 528241, P.R. China

Description of product: Pressure Tank (2L, 5L, PS: 7bar. min/max. TS 0/+50°C)

Test report no.: T154149716-001 (test report see annex)

The product descripted above is in compliance with the requirement of the Sound Engineering Practice according to Article 4 (3) of the Pressure Equipment Directive 2014/68/EU.

Subject to the continued satisfactory operation of the company, and to annually audits as per TUV Rheinland General Procedure.

Shanghai, August 22, 2016 Jack Wang

TUV Rheinland (Shanghai) Co.,Ltd.
No.177, Lane 777, West Guangzhong Road, Shanghai, 200070
Tel. +86 21 61081188, Fax +86 21 61081199

PRESSURE TANKS



AT 10B

PRESSURE TANK BASIC VERSION

CODE	AT83200
INSIDE DIMENSION:	ø24 cm - H 25 cm
CAPACITY:	8,5 lt
MAX PRESSURE:	4,5 bar

AT 10D

PRESSURE TANK BASIC VERSION

CODE	AT10D00
INSIDE DIMENSION:	ø22 cm - H 29 cm
CAPACITY:	8,5 lt
MAX PRESSURE:	4,1 bar





AT 2E P

PRESSURE TANK WITH PRODUCT PRESSURE REGULATION

CODE	AT2E00PR
INSIDE DIMENSION:	ø15 cm - H 43 cm
CAPACITY:	2 lt
MAX PRESSURE:	3,4 bar

PRESSURE TANKS



AT 2ESS

STAINLESS STEEL PRESSURE TANK WITH PRODUCT PRESSURE REGULATION

CODE:	AT2ES00
INSIDE DIMENSION:	ø16 cm - H 17 cm
CAPACITY:	2 lt
MAX PRESSURE:	3,4 bar

AT 2ASS

STAINLESS STEEL PRESSURE TANK COMPLETE WITH AGITATOR AND PRODUCT PRESSURE REGULATION

CODE:	AT2AS00
INSIDE DIMENSION:	ø16 cm - H 17 cm
CAPACITY:	2 lt
MAX PRESSURE:	4,1 bar

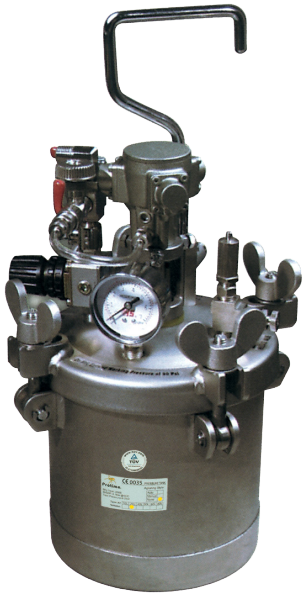



AT 5ESS - AT 5ASS

STAINLESS STEEL PRESSURE TANK COMPLETE WITH AGITATOR AND PRODUCT PRESSURE REGULATION

CODE:	AT5ES00PR	AT5AS00PR
INSIDE DIMENSION:	ø18 cm - H 20 cm	ø18 cm - H 20 cm
CAPACITY:	5 lt	5 lt
MAX PRESSURE:	4,5 bar	4,5 bar

PRESSURE TANKS



AT 10-20-40-60-80 ECONOMIC

PRESSURE TANK WITH PRODUCT PRESSURE REGULATION

CODE:	AT10EPR	AT20EPR	AT40EPR	AT60EPR	AT80E
INSIDE DIMENSION:	ø25 cm - H 19 cm	ø29 cm - H 37 cm	ø35 cm - H 40 cm	ø35 cm - H 55 cm	ø35 cm - H 77 cm
CAPACITY:	10 lt	20 lt	40 lt	60 lt	80 lt
MAX PRESSURE:	4,5 bar	4,5 bar	4,5 bar	4,5 bar	4,5 bar

PRESSURE TANKS

CONTENITORE IN ACCIAIO INOX 10-20-40-60-80 L



AT 10-20-40-60-80 MANUAL

PRESSURE TANK WITH PRODUCT PRESSURE REGULATION

CODE:	AT10MPR	AT20MPR	AT40MPR	AT60MPR	AT80MPR
INSIDE DIMENSION:	ø25 cm - H 19 cm	ø29 cm - H 37 cm	ø35 cm - H 40 cm	ø35 cm - H 55 cm	ø35 cm - H 77 cm
CAPACITY:	10 lt	20 lt	40 lt	60 lt	80 lt
MAX PRESSURE:	4,5 bar	4,5 bar	4,5 bar	4,5 bar	4,5 bar

PRESSURE TANKS

CONTENITORE IN ACCIAIO INOX 10-20-40-60-80 L



AT 10-20-40-60-80 AUTOMATIC

PRESSURE TANK COMPLETE WITH PNEUMATIC AGITATOR AND PRODUCT PRESSURE REGULATION

CODE:	AT10APR	AT20APR	AT40APR	AT60APR	AT80APR
INSIDE DIMENSION:	ø25 cm - H 19 cm	ø29 cm - H 37 cm	ø35 cm - H 40 cm	ø35 cm - H 55 cm	ø35 cm - H 77 cm
CAPACITY:	10 lt	20 lt	40 lt	60 lt	80 lt
MAX PRESSURE:	4,5 bar	4,5 bar	4,5 bar	4,5 bar	4,5 bar

PRESSURE TANKS

CONTENITORE IN ACCIAIO INOX 10-20-40-60-80 L



AT 10-20-40-60 GRAVITY

PRESSURE TANK WITH BOTTOM OUTLET AND PRODUCT PRESSURE REGULATION

CODE:	AT10GPR	AT20GPR	AT40GPR	AT60GPR
INSIDE DIMENSION:	ø29 cm - H 19 cm	ø29 cm - H 36 cm	ø35 cm - H 40 cm	ø35 cm - H 55 cm
CAPACITY:	10 lt	20 lt	40 lt	60 lt
MAX PRESSURE:	4,5 bar	4,5 bar	4,5 bar	4,5 bar

PRESSURE TANKS



AT 10-20-40 STAINLESS STEEL ECONOMIC

STAINLESS STEEL PRESSURE TANK WITH PRODUCT PRESSURE REGULATION

CODE:	AT10ESPR	AT20ESPR	AT40ESPR
INSIDE DIMENSION:	ø25 cm - H 19 cm	ø29 cm - H 36 cm	ø35 cm - H 40 cm
CAPACITY:	10 lt	20 lt	40 lt
MAX PRESSURE:	4,5 bar	4,5 bar	4,5 bar

PRESSURE TANKS



AT 10-20-40 STAINLESS STEEL ECONOMIC

STAINLESS STEEL PRESSURE TANK WITH PRODUCT PRESSURE REGULATION

CODE:	AT10MSPR	AT20MSPR	AT40MSPR
INSIDE DIMENSION:	ø25 cm - H 19 cm	ø29 cm - H 36 cm	ø35 cm - H 40 cm
CAPACITY:	10 lt	20 lt	40 lt
MAX PRESSURE:	4,5 bar	4,5 bar	4,5 bar

PRESSURE TANKS



AT 10-20-40 AUTOMATIC INOX

STAINLESS STEEL PRESSURE TANK COMPLETE WITH MANUAL AGITATOR AND PRODUCT PRESSURE REGULATION

CODE:	AT10ASPR	AT20ASPR	AT40ASPR
INSIDE DIMENSION:	ø25 cm - H 19 cm	ø29 cm - H 36 cm	ø35 cm - H 40 cm
CAPACITY:	10 lt	20 lt	40 lt
MAX PRESSURE:	4,5 bar	4,5 bar	4,5 bar

CATALYST CONTAINER

MADE IN ITALY

NEW PRODUCT - VALSPRAY PRODUCTIONS



CODE	DESCRIPTION
SEB10C	Stainless steel container 10 lt with 1/2 ”lower outlet and hermetic closure for catalysts. Complete with side connection for silica gel kit, return connection and glass viewer for product level
SEB30C	Stainless steel container 30 lt with 1/2 ”lower outlet and hermetic closure for catalysts. Complete with side connection for silica gel kit, return connection and glass viewer for product level
SEB50C	Stainless steel container 50 lt with 1/2 ”lower outlet and hermetic closure for catalysts. Complete with side connection for silica gel kit, return connection and glass viewer for product level
SEB100C	Stainless steel container 100 lt with 1/2 ”lower outlet and hermetic closure for catalysts. Complete with side connection for silica gel kit, return connection and glass viewer for product level

PAY ATTENTION TO THE PRICES



VERSION WITH 70 CM SUPPORT, SUITABLE FOR THE SUPPLY OF PAINTING PUMPS ON TROLLEY

CODE	DESCRIPTION
SET30C	Stainless steel container 30 lt with 1/2 ”lower outlet and hermetic closure for catalysts. Complete with side connection for silica gel kit, return connection and glass viewer for product level
SET50C	Stainless steel container 50 lt with 1/2 ”lower outlet and hermetic closure for catalysts. Complete with side connection for silica gel kit, return connection and glass viewer for product level

STANDARD AND ATEX CERTIFIED LEVEL INDICATORS ARE ALSO AVAILABLE ON REQUEST FOR ALL CONTAINER MODELS

PAINT CONTAINERS

MADE IN ITALY

NEW PRODUCT - VALSPRAY PRODUCTIONS



PAY ATTENTION TO THE PRICES

CODE	DESCRIPTION
SEB010	Stainless steel container 10 lt with 1/2” lower outlet, n. 2 side connections 3/8’’ and semi-openable lid for paints and solvents
SEB300	Stainless steel container 30 lt with 1/2” lower outlet, n. 2 side connections 3/8’’ and semi-openable lid for paints and solvents
SEB500	Stainless steel container 50 lt with 1/2” lower outlet, n. 2 side connections 3/8’’ and semi-openable lid for paints and solvents
SEB100	Stainless steel container 100 lt with 1/2” lower outlet, n. 2 side connections 3/8’’ and semi-openable lid for paints and solvents



CODE	DESCRIPTION
SEB15G	EPDM gasket lid Ø 150mm
SEB22G	EPDM gasket lid Ø 220mm
SEB30G	EPDM gasket lid Ø 300mm
SEB40G	EPDM gasket lid Ø 400mm
LIV1000A	Glass viewer for product level kit
SEBP35	Glass viewer for product level kit

MIXING AND CATALYST HOSES

MADE IN ITALY



CODE	DESCRIPTION
VSB9012	Mixer hose 90cm with 10 mm cartridge fitted 1/2 FS x1 / 2 FS S. steel

CODE	DESCRIPTION
514504	Double stainless steel metal braided hose 50 cm for catalysts with PTFE inside - fittings FS 1/4 ”
514754	Double stainless steel metal braided hose 75 cm for catalysts with PTFE inside - fittings FS 1/4 ”
514104	Double stainless steel metal braided hose 100 cm for catalysts with PTFE inside - fittings FS 1/4 ”
514124	Double stainless steel metal braided hose 125 cm for catalysts with PTFE inside - fittings FS 1/4 ”
514154	Double stainless steel metal braided hose 150 cm for catalysts with PTFE inside - fittings FS 1/4 ”



CODE	DESCRIPTION
538508	Double stainless steel metal braided hose 50 cm for catalysts with PTFE inside - fittings FS 3/8 ”
538758	Double stainless steel metal braided hose 75 cm for catalysts with PTFE inside - fittings FS 3/8 ”
538108	Double stainless steel metal braided hose 100 cm for catalysts with PTFE inside - fittings FS 3/8 ”
538128	Double stainless steel metal braided hose 125 cm for catalysts with PTFE inside - fittings FS 3/8 ”
538158	Double stainless steel metal braided hose 150 cm for catalysts with PTFE inside - fittings FS 3/8 ”



AVAILABLE ON REQUEST NOZZLES FOR FLOW COATING OF DIFFERENT SIZES AND TYPES





MIXER KIT, SILICA GEL AND SPHERES

MIXER KIT



MIXER CARTRIDGE



SILICA GEL



S. STEEL SPHERES



CODE	DESCRIPTION
000214	Mixer kit M 1/4”
000238	Mixer kit M 3/8”
000208	Mixer cartridge 110 mm. Ø 6,3 mm
000218	Mixer cartridge 225 mm. Ø 8 mm
000224	Mixer cartridge 240 mm. Ø 9,8 mm
000234	Mixer cartridge 340 mm. Ø 12,5 mm
000290	Silica gel kg. 1
490006	Sphere Ø 6 mm s. steel
490008	Sphere Ø 8 mm s. steel
490010	Sphere Ø 10 mm s. steel
490011	Sphere Ø 11 mm s. steel
490012	Sphere Ø 12 mm s. steel
490014	Sphere Ø 14 mm s. steel
490016	Sphere Ø 16 mm s. steel
490017	Sphere Ø 17 mm s. steel
490019	Sphere Ø 19 mm s. steel
490020	Sphere Ø 20 mm s. steel
490022	Sphere Ø 22 mm s. steel
490025	Sphere Ø 25 mm s. steel
490032	Sphere Ø 32 mm s. steel
490035	Sphere Ø 35 mm s. steel



CODE	DESCRIPTION
KITG000290	Silica gel kit with level viewer, filtration threshold 20 micron max pressure 13 bar M 3/8 “with brass silencer filter

HEATED HOSE

MADE IN ITALY



HEATED HOSE VS 4000

HEATED HOSE 5/16" LENGHT OF 7.5 MT TO BE CONNECTED TO THE PUMP DIRECTLY WITH FITTING 1/4"

CODE:	VSG-HH-7,5-55
TEMPERATURE:	55°
POWER:	1.200 W
VOLTAGE:	230 V 50 Hz
LENGHT:	7.5 mt
MAX PRESSURE:	250 bar

HEATED HOSE VS 4000

HEATED HOSE 3/8" LENGHT OF 15 MT TO BE CONNECTED TO THE PUMP DIRECTLY WITH FITTING 3/8"

CODE:	VSG-HH-15-55
TEMPERATURE:	55°
POWER:	1.200 W
VOLTAGE:	230 V 50 Hz
LENGHT:	15 mt
MAX PRESSURE:	250 bar

HEATED HOSE VS 3000

HEATED HOSE 5/16" LENGHT OF 7,5 MT TO BE CONNECTED TO THE PUMP DIRECTLY WITH FITTING 1/4"

CODE:	VSG-HH-T-7,5-5/16
TEMPERATURE:	0° - 70°
POWER:	600 W - 3200 W
VOLTAGE:	230 V 50 Hz
LENGHT:	7.5 mt
MAX PRESSURE:	250 bar

HEATED HOSE VS 3000

HEATED HOSE 3/8" LENGHT OF 15 MT TO BE CONNECTED TO THE PUMP DIRECTLY WITH FITTING 3/8"

CODE:	VSG-HH-T-15
TEMPERATURE:	0° - 70°
POWER:	600 W - 3200 W
VOLTAGE:	230 V 50 Hz
LENGHT:	15 mt
MAX PRESSURE:	250 bar



HEATING BANDS

MADE IN ITALY



HEATER FOR WATER BASED PAINT

CODE:	VS3000
MAX. TEMPERATURE:	130°
MAX. PRESSURE:	250 bar
VOLTAGE:	220 V 50 Hz

HEATER FOR WATER-BASED PAINTS

CODE:	VSR055
MAX TEMPERATURE:	130°
TEMPERATURE:	250 bar
VOLTAGE:	220 V 50 Hz





HEATING BAND FOR BARRELS UP TO 200 LT

CODE:	FFU0200
MAX TEMPERATURE:	30° - 90°
MAX PRESSURE:	1500 W
VOLTAGE:	220 V 50 Hz
DIMENSIONS:	1800 x 200 mm

HEATING BAND FOR CANS OF 5-10-30 LT

	30LT	10LT	5LT
CODE:	FFU0030	FFU0010	FFU0005
MAX TEMPERATURE:	30° - 90°	30° - 90°	30° - 90°
THERMOSTAT:	incorporated on the band	incorporated on the band	external control box
MAX PRESSURE:	600 W	600 W	250 W
VOLTAGE:	220 V 50 Hz	220 V 50 Hz	220 V 50 Hz
DIMENSION:	920 x 200 mm	750 x 170 mm	650 x 90 mm



ECONOMICAL COMPRESSORS

MADE IN ITALY



AIR COMPRESSOR LUBRICATED COAXIALS 1 HEAD

CODE	AIR FLOW	MOTOR	PRESSURE
AB20D-06	6 LITER TANK 222 L/MIN	2 CV 230 V	8 bar
AB20D-24	24 LITER TANK 222 L/MIN	2 CV 230 V	8 bar
AB20D-50	50 LITER TANK 222 L/MIN	2 CV 230 V	8 bar

AIR COMPRESSOR LUBRICATED COAXIALS 2 HEAD

CODE	AIR FLOW	MOTOR	PRESSURE
AB50M050	50 LITER TANK 356 L/MIN	3 CV 230 V	10 bar





AIR COMPRESSOR LUBRICATED COAXIALS 2 HEAD

CODE	AIR FLOW	MOTOR	PRESSURE
AB50M100	100 LITER TANK 356 L/MIN	3 CV 230 V	10 bar

COMPRESSORS

MADE IN ITALY



DIAPHRAGM AIR COMPRESSOR

CODE	AIR FLOW	MOTOR	PRESSURE
VSBCOMPGE05	5 LITER TANK 60 L/MIN	1 CV 230 V	8 bar

DIAPHRAGM AIR COMPRESSOR

CODE	AIR FLOW	MOTOR	PRESSURE
VSBCOMPGE03	24 LITER TANK 250 L/MIN	1,7 CV 230 V	10 bar
VSBCOMPGE04	50 LITER TANK 250 L/MIN	1,7 CV 230 V	10 bar



COMPRESSORS

BELT DRIVEN AIR COMPRESSOR WITH 3 HEADS

SUITABLE TO POWER MINI SANDBLASTERS

CODE	AIR FLOW	MOTOR	PRESSURE
VSAG1100	AIR TANK 37+37 LT 1100 lt/min	13 HP	16 bar





BELT DRIVEN AIR COMPRESSOR WITH 3 HEADS

SUITABLE TO POWER MINI SANDBLASTERS

CODE	AIR FLOW	MOTOR	PRESSURE
AB30C-90M	AIR TANK 50 LT 440 LT/MIN	3 HP 230 v	10 bar
AB30C-50M	AIR TANK 100 LT 440 LT/MIN	3 HP 230 v	10 bar

BELT DRIVEN AIR COMPRESSOR

SUITABLE TO POWER MINI SANDBLASTERS

CODE	AIR FLOW	MOTOR	PRESSURE
SLNCVS55	AIR TANK 270 LT 727 LT/MIN	5,5 HP 380 v	11 bar
SLNCVS75	AIR TANK 270 LT 827 LT/MIN	7,5 HP 380 v	11 bar



DRYERS



CODE:		FMD3	FMD6	FMD9	FMD12	FMD18	FMD25	FMD32	FMD43
REFRIGERANT		R134.A	R134.A	R134.A	R134.A	R134.A	R134.A	R134.A	R407C
FLOW RATE	M^3/H	21	36	57	72	108	150	192	258
	L/MIN	350	600	950	1200	1800	2500	3200	4300
	SCFM	12	21	34	42	64	88	113	152
POWER SUPPLY		1/230/50-60	1/230/50-60	1/230/50-60	1/230/50-60	1/230/50-60	1/230/50-60	1/230/50	1/230/50
COOLING MODE		AC	AC	AC	AC	AC	AC	AC	AC
CONNECTIONS		G 3/8" BPS-F	G 1/2" BPS-F	G 1/2" BPS-F	G 1/2" BPS-F	G 1/2" BPS-F	G 1/2" BPS-F	G 1" BPS-F	G 1.1/4" BPS-F
ELECTRONIC CONTROLLER		DMC35-TEMP	DMC35-TEMP	DMC35-TEMP	DMC35-TEMP	DMC35-TEMP	DMC35-TEMP	DMC35-TEMP	DMC35-P407
CONDENSATE DRAIN		TM	TM	TM	TM	TM	TM	TM	TM
WIDTH		370	370	370	370	370	345	345	345
LENGTH		515	515	515	515	515	420	445	445
HEIGHT		475	475	475	475	475	740	740	740
NET WEIGHT		23	25	28	30	34	35	41	43

SANDBLASTING AND ACCESSORIES



MINI SANDBLASTING MACHINES OF OUR PRODUCTION IN LOW PRESSURE WITH REDUCED AIR CONSUMPTION

INDUSTRIAL HIGH PRESSURE SANDBLASTING MACHINES WITH 18 TO 200 LITERS OF CAPACITY





SANDBLASTING MASKS, COMPRESSORS FOR SANDBLASTERS FEED AND ACCESSORIES

SANDBLASTING NOZZLES, GALVANIZED FITTINGS AND SPARE PARTS FOR ALL TYPES OF SANDBLASTERS

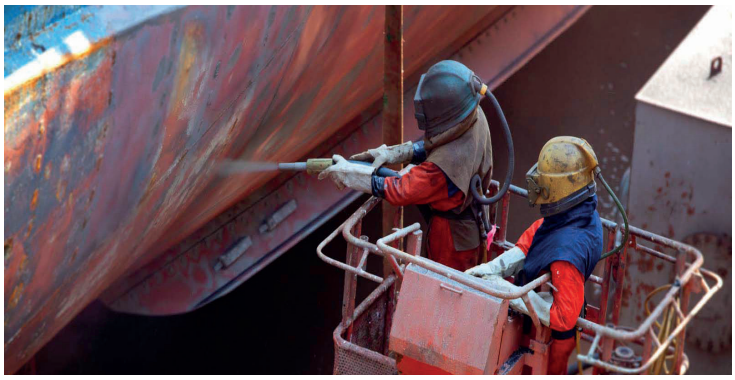



HUMIDIFIER KIT FOR SANDBLASTING AND KIT FOR HYDRO SANDBLASTING

SANDBLASTER WITHOUT EQUIPMENT

AIRBLAST SANDBLASTERS UNLIKE NORMAL SANDBLASTERS ARE ALL EQUIPPED WITH A RUBBER LOCKING VALVE TO LIMIT ABRASION AND WITH AN ABRASIVE NEEDLE ADJUSTMENT VALVE TO ENSURE GREATER SENSITIVITY IN MIXING THE ABRASIVE WITH AIR.

MANUAL CONTROL

CODE	CAPACITY	PRESSURE
1019-VS18M	18 LT	12 bar

PNEUMATIC REMOTE CONTROL

CODE	CAPACITY	PRESSURE
1019-VS18	18 LT	12 bar





MANUAL CONTROL

CODE	CAPACITY	PRESSURE
1019-VS100M	100 LT	12 bar
1019-VS50M	50 LT	12 bar

PNEUMATIC REMOTE CONTROL

CODE	CAPACITY	PRESSURE
1019-VS100	100 LT	12 bar
1019-VS50	50 LT	12 bar

MANUAL CONTROL

CODE	CAPACITY	PRESSURE
1019-VS200M	200 LT	12 bar

PNEUMATIC REMOTE CONTROL

CODE	CAPACITY	PRESSURE
1019-VS200	200 LT	12 bar



SANDBLASTER WITH EQUIPMENT

THE KIT INCLUDES:
• FOR THE 18LT MODEL: 5MT OF ABRASIVE TUBE WITH 4X40 FITTINGS AND NOZZLE, CONTROL AIR TUBE AND MASK AIR TUBE (ONLY FOR MODELS WITH PNEUMATIC CONTROL).
• FOR THE 100 / 200LT MODEL: 20M OF ABRASIVE HOSE WITH FITTINGS AND 7X75 NOZZLE, AIR CONTROL HOSE AND MASK AIR HOSE (ONLY FOR MODELS WITH PNEUMATIC CONTROL).

MANUAL CONTROL

COMPLETE WITH EQUIPMENT

CODE	CAPACITY	PRESSURE
1019-VS18KM	18 LT	12 bar



PNEUMATIC REMOTE CONTROL

COMPLETE WITH EQUIPMENT

CODE	CAPACITY	PRESSURE
1019-VS18K	18 LT	12 bar



MANUAL CONTROL

COMPLETE WITH EQUIPMENT

CODE	CAPACITY	PRESSURE
1019-VS100KM	100 LT	12 bar
1019-VS50KM	50 LT	12 bar

PNEUMATIC REMOTE CONTROL

COMPLETE WITH EQUIPMENT

CODE	CAPACITY	PRESSIONE
1019-VS100K	100 LT	12 bar
1019-VS50K	50 LT	12 bar

MANUAL CONTROL

COMPLETE WITH EQUIPMENT

CODE	CAPACITY	PRESSIONE
1019-VS200KM	200 LT	12 bar

PNEUMATIC REMOTE CONTROL

COMPLETE WITH EQUIPMENT

CODE	CAPACITY	PRESSIONE
1019-VS200K	200 LT	12 bar



SANDBLASTING CABINS



CAB CABS WITH PRESSURE SAND DELIVERY WITH
RUBBERIZED CABIN INTERIORS

TECHNICAL DATA	CAB-110PD	CAB-135PD
Cabin dim. LxWxH mm	950x720x760	1150x920x860
Total dim. LxWxH mm	Side door dimension: 350x350	Side door dimension: 350x350
Collector dim. LxWxH mm		
Type of dust collector		
Filtering area m^2	-	-
Electricity required kW	0,5 kW, 380V~	0,5 kW, 380V~

CODE	MODEL	DESCRIPTION
15209	CAB-110PD	Pressurized blasting cabinet

CODE	DESCRIPTION
CO15300GX	Sandblaster gun GX (nozzle excluded)
CO15400GA	Sandblaster gun GX (nozzle excluded)
CO15502GX	Tungsten nozzle Ø 6 for GX gun
CO15508GX	Tungsten nozzle Ø 8 for GX gun
CO15509GX	Tungsten nozzle Ø 9 for GX gun
CO15506GA	Boron nozzle Ø 6 Ø for GA gun
CO15508GA	Boron nozzle Ø 8 Ø for GA gun
CO15510GA	Boron nozzle Ø 9 Ø for GA gun



MINI SANDBLASTERS

MADE IN ITALY

LOW AIR CONSUMPTION MINI SANDBLASTERS WITH ABRASIVE ADJUSTMENT VALVE AND PRECISION PRESSURE GAUGE, WITH AUTOMATIC DEPRESSURIZATION WHEN THE TRIGGER IS RELEASED: SUITABLE FOR THE STONE, METAL, WOOD, NAUTICAL AND GLASS SECTORS



Code	070113VS	070127VS
Max pressure	7 bar	7 bar
air consumption	380 lt/min	380 lt/min
Capacity	10 lt	27 lt
Weight	18 kg	38 kg
Price	**€ 2.900,00**	**€ 3.330,00**

CODE	DESCRIPTION
070113VSC	VS 13 mini sandblaster complete with RC4 mask, nozzle and 10 glasses for RC4
070127VSC	VS 27 mini sandblaster complete with RC4 mask, nozzle and 10 glasses for RC4

COMPRESSOR REQUIREMENTS POWER SUPPLY: 3CV FROM 380 TO 660 LT/MIN

STONE	Graffiti cleaning, facades and monuments restoration, decorations and soil cleaning IDEAL IN HISTORICAL CENTERS THANKS LOW DUST IMPACT
WOOD	Window pickling, furniture restoration and painted details
METAL	Oxide cleaning, paint pickling, surface treatment, parts and industrial machinery, bodywork and restoration of vintage vehicles
GLASS	Decoration
NAUTICAL	Gel Coat satin finish, anti-vegetative restoration



GRAFFITI CLEANING AND STONE BLASTING



ANTI-VEGETATIVE RESTORATION



WINDOWS AND FORNITURE RESTORATION



BODYWORK FOR VINTAGE PIECES

MINI SANDBLASTER ACCESORIES





CODE	DESCRIPTION
300900B	White light crust sandblasting gloves
MINSE1	Wooden sieve for abrasives with galvanized mesh

GLOVES AND SIEVE ARE SUPPLIED WITH THE MACHINE AT THE TIME OF PURCHASE

CODE	DESCRIPTION
350113C	Air hose 20 bar 13x23 m 10 Express connection
350116C	Air hose 20 bar 16x26 m 10 Express connection
350119C	Air hose 20 bar 19x30 m 10 Express connection





CODE	DESCRIPTION
300010	Blasting mask RC 4 (without filter)
300010V	Aired blasting mask RC 4 (without filter)
300081	Aerosol filter for RC 4
300086	Glass screen 100x140

CODE	DESCRIPTION
522420	Cylindrical nozzle ø 2mm
522425	Cylindrical nozzle ø 2,5mm
520243	Cylindrical nozzle ø 3mm
520244	Cylindrical nozzle ø 3,5mm
520245	Cylindrical nozzle ø 4mm
520246	Cylindrical nozzle ø 4,5mm
520247	Cylindrical nozzle ø5mm







CODE	DESCRIPTION
0700010	Garnet bag 25 kg 0,2/96mm 30/60M
GA0030	Fine quarz 01-05 bag 25 kg
GA0031	Medium quarz 03-09 bag 25 kg
GA0033	Humidifier kit

CODE	DESCRIPTION
ZENTRON0023	Zentron kit for sandblasting with grit recovery





VACUUM CLEANER AND SANDBLASTING NON INCLUDED

CONTRACTORS PUMP AND EQUIPMENT



PLASTERING MACHINES FOR THE CONSTRUCTION SECTOR FOR PRE-MIXED PRODUCTS AND MIXERS

HIGH PRESSURE PUMPS FOR BUILDING AND INDUSTRIAL PAINTING





PROFESSIONAL ROAD MARKERS FOR STREETS, PARKING LOTS AND WAREHOUSES

ELECTRIC PUMPS AND TURBINES FOR DIY AND SMALL JOBS





PUMPS FOR PLASTER, INTUMESCENT AND WALL COVERINGS

AIRLESS MEMBRANE PUMPS

MADE IN ITALY

SUITABLE FOR THE PAINTING OF: Industrial paints, thixotropic paints, primers, water-based enamels, anti-corrosion paints, polyurethane, epoxies, acrylics, wall paints for interiors and exteriors.

LINEA BY VALSPRAY

VS 4500 COMPACT

AIRLESS ELECTRIC MEMBRANE PUMP WITH VERTICAL HEAD MOUNTED ON CART WITH WHEELS

CODE:	069400
FLOW:	5 lt/min
MAX PRESSURE:	200 bar
MAX TIP SIZE:	0.021”
POWER:	0.9 kW
POWER TENSION:	230 V - 50 Hz
WEIGHT:	28 kg
NOISE LEVEL:	70 dB







FILTERING SOCK SUPPORT SL
COD. SL9000 €60,00
YELLOW DISPERSION FILTERING SOCKS (CONF. 5 PCS)
COD. SL4000 €37,00



ALSO AVAILABLE WITH 25 LT STAINLESS STEEL TANK



AIRLESS KIT WITH SUCTION SYSTEM

CODE	DESCRIPTION
069400	VS 4500 Compact pump on cart with wheels
073629	Suction dispersion kit with hose ø 25 suction M 28x1,5 and nut FG 36x2 90°
614104	HP Hose 1/4” metallic braid fitted FS 1/4” 10 m
VS818145	VS 500 Airless manual gun 11/16”
ARVXXXA	Self-cleaning tip ARV
AR8555051	Tip guard 11/16”
400800	Stroke compensator with pressure gauge 0-400 bar

COMPLETE KIT PRICE:

AIRLESS KIT WITH NYLON TANK

CODE	DESCRIPTION
069400	VS 4500 Compact pump on cart with wheels
520001RT	Nylon tank kit 6 L with high pressure return hose 20x2
614104	HP Hose 1/4” metallic braid fitted FS 1/4” 10 m
VS818145	VS 818 Airless Manual gun 11/16"
ARVXXXA	Self-cleaning tip ARV
AR8555051	Tip guard 11/16”
400800	Stroke compensator with pressure gauge 0-400 bar

COMPLETE KIT PRICE:

AIRLESS MEMBRANE PUMPS

MADE IN ITALY

SUITABLE FOR THE PAINTING OF: Industrial paints, thixotropic paints, primers, water-based enamels, anti-corrosion paints, polyurethane, epoxies, acrylics, wall paints for interiors and exteriors.

LINEA BY VALSPRAY

VS 6000 COMPACT

AIRLESS ELECTRIC MEMBRANE PUMP WITH VERTICAL HEAD MOUNTED ON CART WITH WHEELS

CODE:	069600
FLOW:	6 lt/min
MAX PRESSURE:	200 bar
MAX TIP SIZE:	0.025”
POWER:	1.8 kW
POWER TENSION:	230 V - 50 Hz
WEIGHT:	32 kg
NOISE LEVEL:	70 dB







FILTERING SOCK SUPPORT SL
COD. SL9000 €60,00
YELLOW DISPERSION FILTERING SOCKS (CONF. 5 PCS)
COD. SL4000 €37,00



ALSO AVAILABLE WITH 25 LT STAINLESS STEEL TANK



AIRLESS KIT WITH SUCTION SYSTEM

CODE	DESCRIPTION
069600	VS 6000 Compact pump on cart with wheels
073629	Suction dispersion kit with hose ø 25 suction M 28x1,5 and nut FG 36x2 90°
614104	HP Hose 1/4” metallic braid fitted FS 1/4” 10 m
VS818145	VS 500 Airless manual gun 11/16”
ARVXXXA	Self-cleaning tip ARV
AR8555051	Tip guard 11/16”
400800	Stroke compensator with pressure gauge 0-400 bar

COMPLETE KIT PRICE::

AIRLESS KIT WITH NYLON TANK

CODE	DESCRIPTION
069600	VS 6000 Compact pump on cart with wheels
520001RT	Nylon tank kit 6 L with high pressure return hose 20x2
614104	HP Hose 1/4” metallic braid fitted FS 1/4” 10 m
VS818145	VS 818 Airless manual gun 11/16”
ARVXXXA	Self-cleaning tip ARV
AR8555051	Tip guard 11/16”
400800	Stroke compensator with pressure gauge 0-400 bar

COMPLETE KIT PRICE

AIRLESS MEMBRANE PUMPS

MADE IN ITALY

SUITABLE FOR THE PAINTING OF: Industrial paints, thixotropic paints, primers, water-based enamels, anti-corrosion paints, polyurethane, epoxies, acrylics, wall paints for interiors and exteriors.

LINEA BY VALSPRAY

VS 10000 COMPACT

AIRLESS ELECTRIC MEMBRANE PUMP WITH VERTICAL HEAD MOUNTED ON CART WITH WHEELS

CODE:	069100
FLOW:	12 lt/min
MAX PRESSURE:	250 bar
MAX TIP SIZE:	0.037”
POWER:	1.8 kW
POWER TENSION:	230 V - 50 Hz
WEIGHT:	35 kg
NOISE LEVEL:	70 dB







FILTERING SOCK SUPPORT SL
COD. SL9000 €60,00
YELLOW DISPERSION FILTERING SOCKS (CONF. 5 PCS)
COD. SL4000 €37,00



ALSO AVAILABLE WITH 6 LT NYLON TANK



AIRLESS KIT WITH SUCTION SYSTEM

CODE	DESCRIPTION
069100	VS 10000 Compact pump with vertical head on cart with wheels
073629	Suction dispersion kit with hose ø 25 suction M 28x1,5 and nut FG 36x2 90°
614104	HP Hose 1/4” metallic braid fitted FS 1/4” 10 m
VS818145	VS 818 Airless manual gun 11/16”
ARVXXXA	Self-cleaning tip ARV
AR8555051	Tip guard 11/16”
400800	Stroke compensator with pressure gauge 0-400 bar

COMPLETE KIT PRICE:

AIRLESS KIT WITH S. STEEL TANK

CODE	DESCRIPTION
069100	VS 10000 Compact pump with vertical head on cart with wheels
521001RT	S. steek tank kit 25 L with high pressure return hose 20x2
614104	HP Hose 1/4” metallic braid fitted FS 1/4” 10 m
VS818145	VS 818 Airless manual gun 11/16”
ARVXXXA	Self-cleaning tip ARV
AR8555051	Tip guard 11/16”
400800	Stroke compensator with pressure gauge 0-400 bar

COMPLETE KIT PRICE:

AIRLESS MEMBRANE PUMPS

MADE IN ITALY

SUITABLE FOR THE PAINTING OF: Industrial paints, thixotropic paints, primers, water-based enamels, anti-corrosion paints, polyurethane, epoxies, acrylics, wall paints for interiors and exteriors.

LINEA BY VALSPRAY

VS 10000 LATERALE

AIRLESS ELECTRIC MEMBRANE PUMP WITH HORIZONTAL HEAD MOUNTED ON CART WITH WHEELS

CODE:	069200
FLOW:	12 lt/min
MAX PRESSURE	250 bar
MAX TIP SIZE:	0.037”
POWER:	1.8 kW
POWER TENSION:	230 V - 50 Hz
WEIGHT:	35 kg
NOISE LEVEL:	70 dB





FILTERING SOCK SUPPORT SL
COD. SL9000 €60,00
YELLOW DISPERSION FILTERING SOCKS (CONF. 5 PCS)
COD. SL4000 €37,00



AIRLESS KIT WITH SUCTION SYSTEM

CODE	DESCRIPTION
069200	VS 10000 Compact pump with horizontal head on cart with wheels
070362	Suction dispersion kit with hose ø 25 suction M 28x1,5 and nut FG 36x2
614104	HP Hose 1/4” metallic braid fitted FS 1/4” 10 m
VS818145	VS 818 Airless manual gun 11/16”
ARVXXXA	Self-cleaning tip ARV
AR8555051	Tip guard 11/16”
400800	Stroke compensator with pressure gauge 0-400 bar
	COMPLETE KIT PRICE::

AIRLESS MEMBRANE PUMPS

MADE IN ITALY

SUITABLE FOR THE PAINTING OF: Industrial paints, thixotropic paints, primers, water-based enamels, anti-corrosion paints, polyurethane, epoxies, acrylics, wall paints for interiors and exteriors.

LINEA BY VALSPRAY

VS 10000 GASOLINE

AIRLESS GASOLINE POWERED MEMBRANE PUMP WITH VERTICAL HEAD MOUNTED ON CART WITH WHEELS

CODE:	069500
FLOW:	12 lt/min
MAX PRESSURE:	250 bar
MAX TIP SIZE:	0.037”
POWER:	6,5 Cv
POWER TENSION:	230 V - 50 Hz
WEIGHT:	50 kg





FILTERING SOCK SUPPORT SL
COD. SL9000 €60,00
YELLOW DISPERSION FILTERING SOCKS (CONF. 5 PCS)
COD. SL4000 €37,00

AIRLESS KIT WITH SUCTION SYSTEM

CODE	DESCRIPTION
069500	VS 10000 Compact pump with gasoline engine on cart with wheels
073629	Suction dispersion kit with hose ø 25 suction M 28x1,5 and nut FG 36x2 90°
614104	HP Hose 1/4” metallic braid fitted FS 1/4” 10 m
VS818145	VS 818 Airless manual gun 11/16”
ARVXXXA	Self-cleaning tip ARV
AR8555051	Tip guard 11/16”
400800	Stroke compensator with pressure gauge 0-400 bar

COMPLETE KIT PRICE:



AIRLESS PISTON PUMPS

FEATURES

- HIGH QUALITY INDUSTRIAL ELECTRIC MOTOR
- EXTREME PUMP WITH CHROME PISTON AND LIFETIME PUMP CILINDER
- PRECISION SPRAY CONTROL SYSTEM PROVIDES SMOOTH SPRAYING

LINEA BY VALSPRAY



VS 410

PISTON AIRLESS PUMP COMPLETE WITH 1/4" 15MT HOSE, VS 818 GUN WITH TIP AND 45CM EXTENSION

CODE:	VS410
FLOW:	2,1 lt/min
MAX PRESSURE:	207 bar
MAX TIP SIZE:	0.021"
POWER:	1.2 hp
POWER TENSION:	230 V - 50 Hz
MAX HOSE LENGHT:	15 mt
WEIGHT:	13 kg

VS 410 S

PISTON AIRLESS PUMP COMPLETE WITH 1/4" 15MT HOSE, 6 LT TANK, VS 818 GUN WITH TIP AND 45CM EXTENSION

CODE:	VS410SE
FLOW:	2,1 lt/min
MAX PRESSURE:	207 bar
MAX TIP SIZE:	0.021"
POWER:	1.2 hp
POWER TENSION:	230 V - 50 Hz
MAX HOSE LENGHT:	15 mt
WEIGHT:	13 kg





FILTERING SOCK SUPPORT SL
COD. SL9000 €60,00
YELLOW DISPERSION FILTERING SOCKS (CONF. 5 PCS)
COD. SL4000 €37,00



VS 410 HIGH

AIRLESS PISTON PUMP COMPLETE WITH 1/4" TUBE 15MT, GUN VS 818 AND EXTENSION 45CM.

CODE:	VS410HI
FLOW:	2,1 lt/min
MAX PRESSURE:	207 bar
MAX TIP SIZE:	0.021"
POWER:	1.2 Cv
POWER TENSION:	230 V - 50 Hz
MAX HOSE LENGHT:	15 mt
WEIGHT:	13 kg

AIRLESS PISTON PUMPS

CHARACTERISTICS

- HIGH TORQUE INDUSTRIAL QUALITY ELECTRIC MOTOR
- EXTREME PUMP WITH CHROMED PISTON AND LONG-LASTING CYLINDER
- RELIABLE PRESSURE CONTROL FOR HOMOGENEOUS SPRAY

LINEA BY VALSPRAY

SUITABLE FOR:

IMPREGNATING
WASHABLE
LACQUERS AND ENAMELS
INTERIOR WALL PAINTS
WALL PAINTS FOR EXTERIORS
THIXOTROPIC WITH WATER FOR
OUTDOOR USE





FILTERING SOCK SUPPORT SL
COD. SL9000 €60,00
YELLOW DISPERSION FILTERING SOCKS (CONF. 5 PCS)
COD. SL4000 €37,00



VS 610

PISTON AIRLESS PUMP COMPLETE WITH 1/4" 15MT HOSE, VS 818 GUN WITH TIP AND GUARD

CODE:	VS610
FLOW:	4 lt/min
MAX PRESSURE:	227 bar
MAX TIP SIZE:	0.027"
POWER:	1 Cv
POWER TENSION:	230 V - 50 Hz
MAX HOSE LENGHT:	30 mt
WEIGHT:	25 kg

VS 610 HIGH

AIRLESS PISTON PUMP COMPLETE WITH 1/4" TUBE 15MT, GUN VS 818 AND EXTENSION 45CM.

CODE:	VS610HI
FLOW:	4 lt/min
MAX PRESSURE:	207 bar
MAX TIP SIZE:	0.027"
POWER:	1 Cv
POWER TENSION:	230 V - 50 Hz
MAX HOSE LENGHT:	30 mt
WEIGHT:	25 kg

AIRLESS PISTON PUMPS

CARATTERISTICHE:

- HIGH PRECISION OF THE JET THAT ALLOWS A GREAT DISTRIBUTION OF MATERIALS AT DIFFERENT PRESSURES
- LED DIGITAL DISPLAY
- DC BRUSHLESS HIGH QUALITY INDUSTRIAL ELECTRIC MOTOR
- CHROME PISTON AND LIFETIME PUMP CILINDER
- LARGE HIGH PRESSURE FILTER
- POSSIBILITY OF SPRAYING WITH TWO GUNS

LINEA BY VALSPRAY

SUITABLE FOR:
IMPREGNATING
WASHABLE
LACQUERS AND ENAMELS
INTERIOR WALL PAINTS
ANTI-CORROSION PAINTS
PLASTERBOARD FILLER SPRAY





FILTERING SOCK SUPPORT SL
COD. SL9000 €60,00
YELLOW DISPERSION FILTERING SOCKS (CONF. 5 PCS)
COD. SL4000 €37,00



VS 1110

PISTON AIRLESS PUMP COMPLETE WITH 1/4" 15MT HOSE, VS 818 GUN WITH TIP AND GUARD

CODE	VS1110
FLOW:	5,0 lt/min
MAX PRESSURE:	227 bar
MAX TIP SIZE:	0.033"
POWER:	0.019"
POWER TENSION:	4 hp
MAX HOSE LENGHT:	230 V - 50 Hz
HEIGHT:	45 mt
WEIGHT:	55 kg

VS 1510

PISTON AIRLESS PUMP COMPLETE WITH 1/4" 15MT HOSE, VS 818 GUN WITH TIP AND GUARD

CODE	VS1510
FLOW:	6,5 lt/min
MAX PRESSURE:	227 bar
MAX TIP SIZE:	0.035"
POWER:	0.021"
POWER TENSION:	4 hp
MAX HOSE LENGHT:	230 V - 50 Hz
HEIGHT:	60 mt
WEIGHT:	60 kg

POMPA IDRAULICA A PISTONE

CARATTERISTICHE:
GLI SPRUZZATORI IDRAULICI HSS23000 SONO IDEALI PER GLI APPALTATORI CHE HANNO BISOGNO DI VERSATILITÀ E FLESSIBILITÀ. OTTIENI I RISULTATI CHE STAI CERCANDO NEI TUOI LAVORI INTERNI ED ESTERNI CON LA POSSIBILITÀ DI SPRUZZARE UNA VARIETÀ DI MATERIALI DIVERSI E UNA GAMMA COMPLETA DI VERNICI E PRIMER.



HSS 23000

CODE:	HSS23000
FLOW:	20 lt/min
MAX PRESSURE:	276 bar
NOZZLE MAX 1 GUN:	0.071"
NOZZLE MAX 2 GUNS:	0.035"
POWER:	17hp
WEIGHT:	149 kgs

AIRLESS PISTON PUMPS

CHARACTERISTICS:

- EASY PUMPING OF FULL-BODIED MATERIALS
- SLOW STROKING DESIGN FOR LONGER LIFE
- LESS FREQUENT MAINTENANCE WITH REDUCED COSTS AND TIME
- ENLARGED INPUT LOCATION FOR HIGHER FLOW
- LONG SUBMERSIBLE PUMP IN THE MATERIAL TO ALLOW HEAVY MATERIAL SPRAY
- OVERSIZED HYDRAULIC PUMP TO INCREASE PUMP LIFE
- LARGE STORAGE TANK
- REDUCED OPERATING TIMES AND INCREASED LONGEVITY
- EXPOSED PARACINGHIA PIN FOR EASIER MOTOR REMOVAL

LINEA BY VALSPRAY





FILTERING SOCK SUPPORT SL
COD. SL9000 €60,00
YELLOW DISPERSION FILTERING SOCKS (CONF. 5 PCS)
COD. SL4000 €37,00



HSS 8900 GASOLINE

Airless piston pump complete with tube 3/8" 15mt, gun VS 500 and a nozzle NST431

CODE	VS8900G
FLOW:	12 lt/min
MAX PRESSURE:	227 bar
MAX TIP 1 SIZE:	0.050”
MAX TIP 2 SIZE:	0.033”
POWER:	7 kW 9,4 Hp
POWER TENSION:	Motore honda 9,5 Hp
MAX HOSE LENGHT:	90 mt
WEIGHT:	90 kg

HSS 8900 ELECTRIC

Airless piston pump complete with tube 3/8" 15mt, gun VS 500 and a nozzle NST431

CODE	VS8900E
FLOW:	12 lt/min
MAX PRESSURE:	227 bar
MAX TIP 1 SIZE:	0.047”
MAX TIP 2 SIZE:	0.031”
POWER:	2,2 kW
POWER TENSION:	230 V - 50 Hz
MAX HOSE LENGHT:	90 mt
WEIGHT:	90 kg

AIRLESS PISTON PUMPS

CHARACTERISTICS:

- EASY PUMPING OF FULL-BODIED MATERIALS
- SLOW STROKING DESIGN FOR LONGER LIFE
- LESS FREQUENT MAINTENANCE WITH REDUCED COSTS AND TIME
- ENLARGED INPUT LOCATION FOR HIGHER FLOW
- LONG SUBMERSIBLE PUMP IN THE MATERIAL TO ALLOW HEAVY MATERIAL SPRAY
- OVERSIZED HYDRAULIC PUMP TO INCREASE PUMP LIFE
- LARGE STORAGE TANK
- REDUCED OPERATING TIMES AND INCREASED LONGEVITY
- EXPOSED PARACINGHIA PIN FOR EASIER MOTOR REMOVAL

LINEA BY VALSPRAY





FILTERING SOCK SUPPORT SL
COD. SL9000 €60,00
YELLOW DISPERSION FILTERING SOCKS (CONF. 5 PCS)
COD. SL4000 €37,00



HSS 10900 GASOLINE

Airless piston pump complete with tube 3/8" 15mt, gun VS 500 and a nozzle NST431

CODE	VS10900G
FLOW:	18 lt/min
MAX PRESSURE:	227 bar
MAX TIP 1 SIZE:	0.063”
MAX TIP 2 SIZE:	0.035”
POWER:	7 kW 9,4 Hp
POWER TENSION:	Motore honda 9,5 Hp
MAX HOSE LENGHT:	90 mt
WEIGHT:	90 kg

HSS 10900 ELECTRIC

Airless piston pump complete with tube 3/8" 15mt, gun VS 500 and a nozzle NST431

CODE	VS10900E
FLOW:	18 lt/min
MAX PRESSURE:	227 bar
MAX TIP 1 SIZE:	0.053”
MAX TIP 2 SIZE:	0.033”
POWER:	2,2 kW
POWER TENSION:	230 V - 50 Hz
MAX HOSE LENGHT:	90 mt
WEIGHT:	90 kg

LINE STRIPERS

FEATURES:

- SWIVEL FRONT WHEEL TO ENSURE MAXIMUM MANEUVERABILITY
- THE HONDA ENGINE PROVIDES UNMATCHED POWER
- ENLARGED CAN SUPPORT WITH SPACE FOR CONTAINERS UP TO 50 L
- HANDLEBAR DESIGNED FOR USER COMFORT

LINEA BY VALSPRAY





FILTERING SOCK SUPPORT SL
COD. SL9000 €60,00
YELLOW DISPERSION FILTERING SOCKS (CONF. 5 PCS)
COD. SL4000 €37,00

WS 4500

CART VSL100

CART FOR CONVERSION OF AIRLESS PUMPS IN LINE STRIPER USED WITH AIRLESS GUNS TO BE MOUNTED ON SUPPORT
(SPRAY GUN NOT INCLUDED)

CODE	VSL100
WEIGHT:	6 kg

AIRLESS GASOLINE ENGINE LINE STRIPER

CODE:	VST4500
FLOW:	5 lt/min
MAX PRESSURE:	207 bar
MAX TIP SIZE:	0.023”
POWER:	5,5 Cv Honda
WEIGHT:	75 kg



ACCESSORIES FOR VS410 AND VS610

CODE	DESCRIPTION
HOPSYVS410	Tank kit for VS 410 pump
410S025C	VS 410 foot for tank kit
VSB17H1	6 liter tank compatible for model pumps: MP 455 - LP 555 - LP 655 - VS 610

LINE STRIPERS

FEATURES:

- SWIVEL FRONT WHEEL TO ENSURE MAXIMUM MANEUVERABILITY
- THE HONDA ENGINE PROVIDES UNMATCHED POWER
- POSSIBILITY OF BLOCKING THE FRONT WHEEL TO SPRAY CURVES AND ARCHES WITHOUT IMPERFECTIONS
- HANDLEBAR DESIGNED FOR USER COMFORT
- LOW FRICTION WHEELS TO FACILITATE MOVEMENT AND MINIMIZE EFFORT

LINEA BY VALSPRAY

THE IDEAL SOLUTION FOR TRACING PARKING SLOT LINES, SIGNS FOR WAREHOUSES, ROADS AND SPORTS FIELDS





FILTERING SOCK SUPPORT SL
COD. SL9000 €60,00
YELLOW DISPERSION FILTERING SOCKS (CONF. 5 PCS)
COD. SL4000 €37,00

LINE 6500

AIRLESS GASOLINE ENGINE LINE STRIPER

CODE:	VS6500
FLOW:	3 lt/min
MAX PRESSURE:	210 bar
MAX TIP SIZE:	0.025”
POWER:	5,5 Cv Honda
WEIGHT:	58 kg

LINE 8500

AIRLESS GASOLINE ENGINE LINE STRIPER

CODE:	VS8500
FLOW:	5 lt/min
MAX PRESSURE:	210 bar
MAX TIP SIZE 1 GUN:	0.035”
MAX TIP SIZE 2 GUNS:	0.021”
POWER:	5,5 Cv Vanguard
WEIGHT:	65 kg

RELATED SPARE PARTS AND ACCESSORIES:



STRIPING TIP
Cod. TSLXXX



TIP GUARD
Cod. AR8555051

LINE TRACER WITH SAFETY KIT

CHARACTERISTICS:

- ROTATING FRONT WHEEL FOR MAXIMUM MANOEUVRABILITY
- HONDA GX COMBUSTION ENGINE
- POSSIBILITY OF LOCKING THE FRONT WHEEL TO SPRAY CURVES AND ARCHES WITHOUT IMPERFECTIONS
- HANDLEBAR DESIGNED FOR USER COMFORT
- LOW FRICTION WHEELS TO FACILITATE MOVEMENT AND MINIMIZE EFFORT
- SECOND FRONT WHEEL NOT ROTATING TO ENSURE A UNIFORM STRIP ON UNEVEN GROUND

LINEA BY VALSPRAY

THE IDEAL SOLUTION FOR PLOTTING SEGNELETICA PARKING LINES FOR SHEDS, ROADS AND SPORTS GROUNDS





FILTERING SOCK SUPPORT SL
COD. SL9000 €60,00
YELLOW DISPERSION FILTERING SOCKS (CONF. 5 PCS)
COD. SL4000 €37,00



SAFETY GEAR WHEEL

LINE 6500ANT

AIRLESS INTERNAL COMBUSTION ENGINE TRACER

CODE:	VS6500
FLOW:	3 lt/min
MAX PRESSURE:	210 bar
MAX TIP SIZE:	0.025”
POWER:	5,5 Cv Honda
WEIGHT:	58 kg

LINE 8500ANT

AIRLESS INTERNAL COMBUSTION ENGINE TRACER

CODE:	VS8500
FLOW:	5 lt/min
MAX PRESSURE:	210 bar
MAX TIP 1 SIZE:	0.035”
MAX TIP 2 SIZE:	0.021”
POWER:	5,5 Cv Vanguard
WEIGHT:	65 kg

RELATED SPARE PARTS AND ACCESSORIES:



STRIPING TIP
Cod. TSLXXX



TIP GUARD
Cod. AR8555051

PERISTALTIC PUMP

COMPACT AND VERSATILE PERISTALTIC PUMP IDEAL FOR THE NEEDS OF CRAFTSMEN AND PROFESSIONALS DESIGNED TO SPRAY PLASTER, CEMENT PLASTER, CORK, GRAINY INTUMESCENT, SOUNDPROOFING, PLASTER AND VARIOUS TYPES OF WALL COVERINGS.

EXPLODED VIEW P.
418

COMPETE WITH ACCESSORIES:







ENERGY 21

PERISTALTIC PUMP FOR GRAINY MATERIALS

CODE	VSE21
FLOW:	8 lt/min
WORKIGN PRESSURE:	20 bar
MAX TIP SIZE:	10 mm
POWER:	2,4 Cv
MAX HOSE LENGHT:	30 mt
HOPPER CAPACITY:	50 lt
AIR COMPRESSOR:	350 lt/min

PLASTER MIXER



CONTINUOUS CYCLE MIXER WITH WATER DISPENSER, RESISTANT TO WORK AND EASY TO USE, SUITABLE FOR MIXING MORTARS, FINE CONCRETE, PREMIXED PLASTERS, GLUES FOR TILES AND FOR EXTERNAL INSULATION SYSTEMS.

CODE	E30740
FLOW:	22 lt/min
MIN WATER PRESSURE:	3 bar
MAX GRAIN DIMENSION:	1,5 mm
POWER:	2,2 kW
WATER PUMP:	0,37KW - 40 lt/min

PLASTER SPRAYING MACHINE

FOR APPLICATION OF OUTER INSULATING PRODUTCS



COMPACT PRO 15

CODE	MA0870
FLOW:	from 0 to 15 kg/min
MAX WORKING PRESSURE:	20 bar
MAX GRAIN DIMENSION:	4 mm
POWER:	1,5 kW
ROTOR/STATOR:	MAP 3
REQUIRED AIR:	366 lt/min
HOPPER CAPACITY:	59 lt

COMPACT PRO 25

CODE	MA0875
FLOW:	from 0 to 25 kg/min
MAX WORKING PRESSURE:	30 bar
MAX GRAIN DIMENSION:	4 mm
POWER:	2,2 kW
ROTOR/STATOR:	MIXER 26
REQUIRED AIR:	366 lt/min
HOPPER CAPACITY:	59 lt





COMPACT PRO 35

CODE	MA0485
FLOW:	from 0 to 30 kg/min
MAX WORKING PRESSURE:	40 bar
MAX GRAIN DIMENSION:	3 mm
POWER:	2,2 kW
ROTOR/STATOR:	MAP 7
REQUIRED AIR:	366 lt/min
HOPPER CAPACITY:	100 lt

WALL JOINTS SPRAY MACHINES



COMPACT PRO 10

SUITABLE FOR EXTERNAL APPLICATIONS

CODE	E30382
FLOW:	from 0 to 8 kg/min
MAX WORKING PRESSURE:	20 bar
MAX GRAIN DIMENSION:	1,5 mm
POWER:	0,55 kW - 1 Cv
ROTOR/STATOR:	MAP 3 milled
HOPPER CAPACITY:	37 lt

PLASTER MIXER AND SPRAYER



SUITABLE FOR EXTERNAL APPLICATIONS

PROJECT 430+

SPRAYING SYSTEM COMPLETE WITH AIR COMPRESSOR 366 LT/ MIN

CODE	VSEC3013
FLOW	from 0 to 4 kg/min
MAX WORKING PRESSURE:	30 bar
MAX GRAIN DIMENSION:	1,5 mm
HOSE LENGHT:	5 mt
POWER:	0,55 kW - 1 Cv
ROTOR/STATOR:	MAP 3
HOPPER CAPACITY:	20 lt

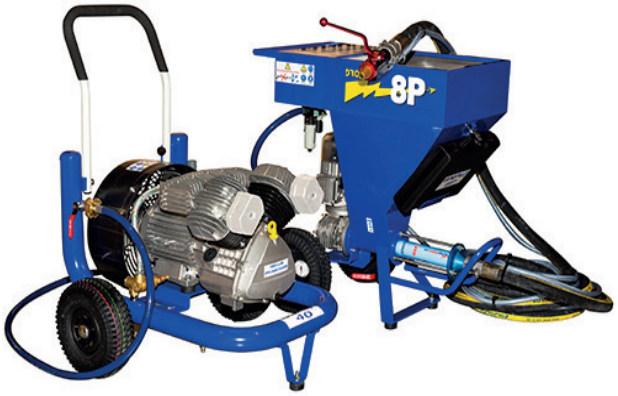

PROJECT 840

SPRAYING SYSTEM COMPLETE WITH AIR COMPRESSOR 546 LT/ MIN

CODE	VSEC3014
FLOW	from 0 to 12 kg/min
MAX WORKING PRESSURE:	30 bar
MAX GRAIN DIMENSION:	1,5 mm
HOSE LENGHT:	8+5 mt
POWER:	3 kW - 4 HP
ROTOR/STATOR:	MAP 2
HOPPER CAPACITY:	45 lt

CARDING MACHINES FOR BLOWING

CARDING MACHINES EQUIPPED FOR THE APPLICATION OF ROCK WOOL, FIREPROOF MATERIALS, GLASS WOOL, CELLULOSE WADDING AND HEMP FOR THE THERMAL AND ACOUSTIC INSULATION OF ATTICS, CEILINGS, WALLS, ETC ...



TURBISOL 56

CODE	5830570
FLOW	from 0 up to 25 sack/h
WORKING PRESSURE	0,2 bar
REMOTE CONTROL	Drive cable 25mt Start / Stop
POWER	0,55 kW 10A
TURBINE	3360 L/min - 1100 W
PRODUCT HOSE	Ø63 x 25 m
HOPPER CAPACITY	220 L

TURBISOL 164/2

CODE	5830865
FLOW	from 0 up to 55 sack/h
WORKING PRESSURE	0,3 bar
REMOTE CONTROL	Drive cable 25mt Start / Stop
POWER	0,75 kW 16A
TURBINE	5000 L/min - 2 x 1400 W
PRODUCT HOSE	Ø63 x 25 m
HOPPER CAPACITY	220 L





TURBISOL 200

CODE	5830947
FLOW	from 0 up to 60 sacchi/h
WORKING PRESSURE	0,3 bar
REMOTE CONTROL	Drive cable 25mt Start / Stop
POWER	1,5 kW 16A
TURBINE	5000 L/min - 2 x 1400 W
PRODUCT HOSE	Ø63 x 25 m
HOPPER CAPACITY	325 L

ROTORS AND STATORS





Code	Description
38029201	Stator MAP 2 380V for Plaster 400 rpm
38002300	Rotor MAP 2 380V for Plaster 400 rpm

Code	Description
38029201	Stator MAP 3 380V for Plaster 400 rpm PRO 15
38002300	Rotor MAP 3 380V for Plaster 400 rpm PRO 15









Code	Description
23001300	Stator Mixer 26 Straight (D4-2) 230V for Plaster 320 rpm PRO 25 - PRO 28
23012000	Rotor Mixer 26 HR (D4-2) 230V for Plaster 320 rpm PRO 25 - PRO 28

Code	Description
23002900	Stator Mixer 30 Straight (D5-2,5, Eco-Star) 230V Plaster 320 rpm
23012500	Rotor Mixer 30 HR (D5-2,5, Eco-Star) 230V for Plaster 320 rpm









Code	Description
23010500	Stator Mixer 32 Straight 230V Self-levelling 320 rpm
23009000	Rotor Mixer 32 HR 230V Self-Levelling 320 rpm

Code	Description
23003000	Stator Mixer 13 Straight (D4-3, D4,1/2) 230V for Glue 320 rpm
23049700	Rotor Mixer 13 HR (D4-3, D4,1/2) 230V for Glue 320 rpm







Code	Description
EURO90640	Product for mounting rotor / stator

WALL INJECTION PUMPS



SILVER 92K

HYDRAULIC AIRLESS PISTON PUMP DESIGNED FOR THE INJECTION OF BI-COMPONENT PRODUCTS COMPLETE WITH 10MT HOSES, SUCTION HOSES AND INJECTION GUN

CODE:	SILVER92K
FLOW:	9 lt/min
MIXING RATIO:	1:1
ENGINE POWER:	3 cv
MAX PRESSURE:	220 bar

VS2P INJECTION

AIRLESS PISTON PUMP DESIGNED FOR THE INJECTION OF BI-COMPONENT PRODUCTS COMPLETE WITH 10MT HOSES, SUCTION HOSES AND INJECTION GUN

CODE:	VS2PINZ
FLOW:	16 lt/min
MIXING RATIO:	1:1
ENGINE POWER:	30:1
MAX PRESSURE:	7 bar





VTN 401 INJECTION

AIRLESS PISTON PUMP COMPLETE WITH 10MT HOSES, SUCTION HOSES AND INJECTION GUN

CODE:	TN401INZ
FLOW:	8 lt/min
PRESSURE RATIO:	40:1
MAX PRESSURE:	7 bar

PUMP FOR WALL COVERINGS



VS 2P COVERINGS 100%

AIRLESS PISTON PUMP DESIGNED TO SPRAY WALL COVERINGS WITH BI-COMPONENT PRODUCTS COMPLETE WITH 10MT HOSES, SUCTION HOSES AND IDOUBLE SPRAY GUN

CODE	VS2PRIV
FLOW:	16 lt/min
MIXING RATIO:	1:1
PRESSURE RATIO:	30:1
WORKING PRESSURE:	7 bar

WALL INJECTION PUMPS



VS 36M

IDEAL FOR INJECTING LOW VISCOSITY RESINS
COMPLETE WITH 3 TUBES OF 5 M AND 3 INJECTOR KITS WITH VALVE

CODE:	212497
FLOW:	36 lt/min
PRESSURE RATIO:	1:1
WORKING PRESSURE:	2 - 8 bar

VS 100M

IDEAL FOR THE APPLICATION OF PLASTIC AND GRANULAR PRODUCTS
COMPLETE WITH 10 M HOSE AND 825H SPRAY GUN WITH Ø 4/6/8 MM NOZZLES

CODE:	212498
FLOW:	180 lt/min
PRESSURE RATIO:	1:1
WORKING PRESSURE:	2 - 8 bar



SUPPLIED ACCESSORIES:





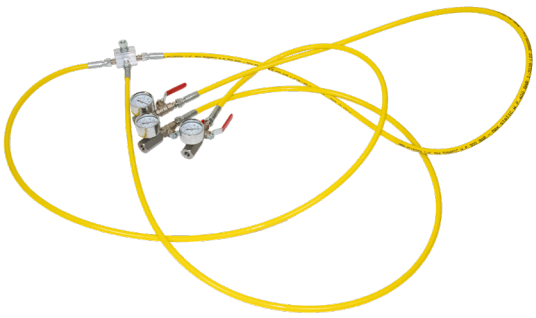

CODE	DESCRIPTION
0323INZ	Injector kit complete with 3 injectors with pressure gauge 0-12 bar



CODE	DESCRIPTION
INI0003	Stainless steel wall injector with inside ø 8 mm reusable with 1/4 M connection
INI0002	Disposable bayonet steel wall injector 12/110
INI001	Connection for bayonet steel wall injector F 1/8" reusable



PLASTER GUNS



BE-72EC

THE PACKAGE BE-72EC INCLUDES:
1 Gun with tank / lower connection
1 Nozzle ø6 and ø8 mm
1 Cleaning kit
1 multipurpose key



LG-1800

THE PACKAGE LG-1800 INCLUDES:
1 Lower gun attack
1 Nozzle ø6 and ø8 mm and fan



BE-34PP

THE PACKAGE BE-34PP INCLUDES:
1 Gun with tank / lower connection
1 Nozzle ø6 and ø8 mm
1 Cleaning kit
1 multipurpose key

CODE:	BE-72EC	LG-1800	BE-34PP
NOZZLE:	4 MM	4/8MM	4MM
CUP:	5 lt	-	-

PLASTERING BUCKET FOR WALLS

CODE:	E012400P4
CONSUMPTION:	400 - 600 lt/min
PERFORMANCE:	50 - 60 m²/h
PRESSURE:	4 - 6 bar





PLASTERING BUCKET FOR CIELING

CODE:	E012400S4
CONSUMPTION:	400 - 600 lt/min
PERFORMANCE:	50 - 60 m²/h
PRESSURE:	4 - 6 bar

TANKS FOR WALL INJECTION



20 L

VSAT20 INIX

CODE:	VSAT20INIX01
CONTAINER CAPACITY:	20 lt
POWER:	compressed air
ADJUSTABLE PRESSURE:	0 - 7 Bar

ATEX - PED - CE CERTIFICATES



40 L

VSAT40 INIX

CODE:	VSAT40INIX02
CONTAINER CAPACITY:	40 lt
POWER:	compressed air
ADJUSTABLE PRESSURE:	0 - 7 Bar

ATEX - PED - CE CERTIFICATES



60 L

VSAT60 INIX

CODE:	VSAT60 INIX03
CONTAINER CAPACITY:	60 lt
POWER:	compressed air
ADJUSTABLE PRESSURE:	0 - 7 Bar

ATEX - PED - CE CERTIFICATES

Tanks for injection at low pressure of grout fluid self-levelling cement grouts.
Consolidation for injections of bricklayer, stone and rock.
Consolidation of historic civil buildings, public masonry in general.

ELECTRIC SPRAY GUN



TURBINE T-10

COMPLETE WITH NOZZLE, 1000 CC CUP, 1 M AIR HOSE AND 2 M POWER CABLE

CODE:	T10C12
MAX PRESSURE:	1 bar
FLOW:	270 ml/min
AIR HOSE LENGHT:	1 m
NOZZLE:	1.2 mm
CUP:	1000 cc
POWER:	230 V - 800W

TURBINE T-8

COMPLETE WITH NOZZLE, 700 CC CUP, 1 M AIR HOSE AND 1 M POWER CABLE

CODE:	T8B18
MAX PRESSURE:	0.2 bar
FLOW:	350 ml/min
AIR HOSE LENGHT:	1 m
NOZZLE:	1.8 mm
CUP:	700 cc
POWER:	230 V - 600W



TURBINE HVLP

MULTIRIGO TMR 80



MULTIRIGO TURBINE WITH AIR FLOW REGULATOR COMPLETE WITH AIRBRUSH WITH 1.3MM LOWER NOZZLE TANK, ACCESSORY TRAY, 2 FIBER FILTERS AND 3 M AIR HOSE

CODE	RIG001
POWER SUPPLY:	230 V - 50 Hz
HOSE LENGHT:	3 mt
AIR VOLUME:	535 - 1850 lt/min
WEIGHT:	5 kg
CUP CAPACITY:	1 lt

CODE	DESCRIPTION
RIG003	Multirigo compressor 800W
RIG010	Multirigo compressor PMR80/6 complete with 6lt backpack tank
RIG004	Spray gun MRS ø 1.3 mm with nylon superior cup lt 0.6 and nozzle ø 2,5
RIG014	Spray gun MBA ø 1.3 mm with nylon superior cup lt 2 ed nozzle ø 2,5
RIG006	Spray gun MRI ø 1.3 mm with inferior tank lt 1 and nozzle ø 2,5 + ø1,7
RIG005	Nozzle for spray gun (available dimension: 0.5 - 0.7 - 1.0 - 1.3 - 1.7 - 2.1 - 2.5)
RIG007	Rigo thermosyphone kit
RIG008	Air hose 3 mt
RIG009	Filter for turbine



CODE:	E00V203	E00V204	E00V205
NOZZLE:	1.0 MM	1.5MM	2.5 MM
THREAD:	18 x 25 mm	18 x 25 mm	18 x 25 mm

THE PACKAGE INCLUDES:

1 Gun with nozzle
1 Viscometer
1 Cleaning kit
1 multipurpose key

CODE:	E000201	E000202	E000203
NOZZLE:	1.0 MM	1.5MM	2.5 MM
THREAD:	1 lt	1 lt	1 lt

THE PACKAGE INCLUDES

1 Gun with lower tank lt. 1
1 Male quick coupling 13mm
1 Viscometer
1 Cleaning kit
1 multipurpose key



TURBINE HVLP



EOLE T5

POWERFUL, QUICK START, HANDY, EASY TO USE, THE EOLE T5 TURBINE IS IDEAL FOR ANY PAINT AND DECORATION JOBS

THE PACKAGE INCLUDES:
1 Eole T5 turbine
1 gun equipped with a Ø 1.5 mm nozzle
1 x 7.5m hose equipped with ball quick couplings
1 viscometer
1 cleaning brush
1 cleaning needle
1 multi-purpose key

CODE:	E30955VS
MAX PRESSURE:	0.67 bar
TURBINE:	5 stadi
HOSE LENGHT:	7.5 mt
POWER:	1700 W
WEIGHT:	19 kg
CUP CAPACITY:	1 lt

EOLE T2

POWERFUL, QUICK START, HANDY, EASY TO USE, THE EOLE T5 TURBINE IS IDEAL FOR ANY PAINT AND DECORATION JOBS

CODE:	E30950VS
MAX PRESSURE:	0.3 bar
TURBINE:	2 stadi
HOSE LENGHT:	4 mt
POWER:	1100 W
WEIGHT:	19 kg
CUP CAPACITY:	1 lt

THE PACKAGE INCLUDES:
1 Eole T2 turbine
1 gun equipped with a Ø 1.5 mm nozzle
1 x 4m hose equipped with ball quick couplings
1 viscometer
1 cleaning brush
1 cleaning needle
1 multi-purpose key





EOLE T5 MINI

POWERFUL, QUICK TO START, HANDY, EASY TO USE, THE EOLE T5 MINI TURBINE IS IDEAL FOR ANY PAINT AND DECORATION JOB.

THE PACKAGE INCLUDES:
1 turbine
1 gun equipped with a Ø 1,5 mm nozzle
1 x 4m hose equipped with ball quick couplings
1 viscometer
1 cleaning brush
1 cleaning needle
1 multi-purpose key

CODE	030956
MAX PRESSURE:	0.67 bar
POWER:	1700 W
WEIGHT:	8,5 kg
CUP CAPACITY:	1 lt

MIXERS



CODE:	DP-M209B	EV23368.000
POWER SUPPLY:	230 V - 50 Hz	230 V - 50 Hz
POWER:	1600 W	1300 W
N. IDLE SPEED:	700 g/min	700 g/min
CONNECTION:	1/2” 20 UNF + M 1/4”	1/2” 20 UNF + M 1/4”
MAX MIXER Ø:	140 mm	160 mm



CODE	DESCRIPTION
UG120/25	Cage mixer M14
FM120/130	Circular mixer M14

TROWEL



VSM 400 TROWEL COMPLETE WITH TROWEL, CONTROL UNIT, 1 PLASTIC BOX; 1 PAD HOLDER; 3 SPONGES Ø400MM: BROWN, BLUE, WHITE; 1 HARD DRIVE FOR BLANK; SAFETY GOGGLES. SUITABLE FOR ALL TYPES OF PLASTER WITH AND WITHOUT ADDITIVES, FOR BOTH FINE AND ROUGH MORTARS.

CODE	VS400MR003
IDLE RPM	180 min
WEIGHT:	3,5 kg + 15 kg
POWER:	150 W + 600 W

ECONOMIC TROWEL



TROWEL VSM 301 COMPLETE WITH TROWEL; 1 SPONGE, 400MM: BROWN; 1 HARD DISK FOR ROUGH; RECOMMEND PROTECTIVE GOGGLES FOR THE OPERATOR. SUITABLE FOR WORKING ALL TYPES OF PLASTER WITH AND WITHOUT ADDITIVES, FOR BOTH FINE AND ROUGH MORTARS.

CODE	VS400MR003V
IDLE RPM	0 - 60 min-1
WEIGHT:	3,5kg
POWER:	500W

SANDER

THE VSE25 SANDING MACHINE IS THE IDEAL TOOL FOR CARRYING OUT SANDING WORK ON PLASTERBOARD STRUCTURES, REMOVING PAINTS, WORKING ON WOODEN AND METAL SURFACES. THE COMPACT AND HANDY SHAPE MAKES IT PERFECT FOR WORKING IN LIMITED SPACES.

COMPLETE WITH TELESCOPIC ROD FROM 1.35 TO 1.90 M, TRANSPORT BAG, SANDPAPER Ø 225 MM 1PC X GR 60, 80, 180, 220



CODE	VSE225
IDLE RPM	600-1600
WEIGHT:	3,2 kg
POWER:	710 W

CODE	DESCRIPTION	BOX OF
300.322.FRU	Abrasive paper disc ø225mm 80 g	50pz
300.324.FRU	Abrasive paper disc ø225mm 120 g	100pz
300.325.FRU	Abrasive paper disc ø225mm 150 g	100pz
300.326.FRU	Abrasive paper disc ø225mm 180 g	100pz
300.328.FRU	Abrasive paper disc ø225mm 240 g	100pz

EXPLODED VIEW VSE225

Accessories available upon request

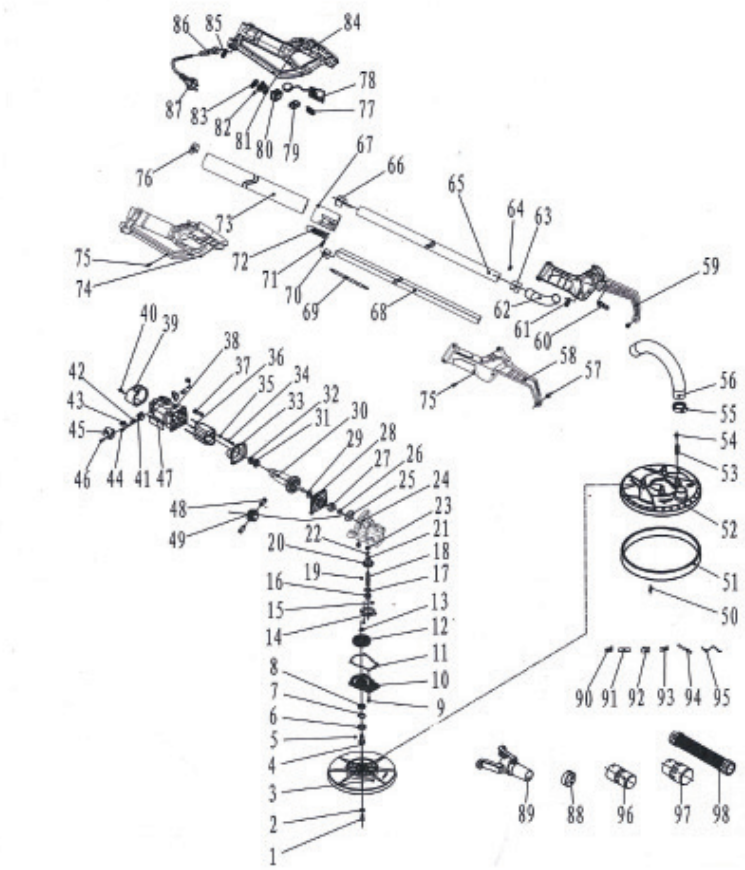

VACUUM CLEANERS



AERO 26-21PC

THE COMPACT ERGONOMIC VACUUM CLEANER WITH HIGH SUCTION POWER AND PATENTED CLEANING SYSTEM PUSH & CLEAN FOR BOTH POWDERS AND LIQUIDS

CODE:	RUR107406606
POWER:	1000 W
POWER SUPPLY:	230 V - 50 Hz
MAX FLOW:	60 lt/s
TANK CAPACITY:	25 lt
POWER CONSUPTION:	2600 W
CONNECTION:	ø 40 mm

ATTIX 33 - ATTIX 44 IC

THE BRAND NEW VACUUM CLEANER EQUIPPED WITH THE EFFECTIVE INFINICLEN FILTER CLEANING SYSTEM. THIS INNOVATIVE SYSTEM ALLOWS CONSTANT FILTER CLEANING WITHOUT ANY DROP IN PERFORMANCE.

CODE:	RUR107412180	RUR107442190
POWER:	1400 W	1400 W
POWER SUPPLY:	230 V - 50 Hz	230 V - 50 Hz
MAX FLOW:	4500 lt/m	4500 lt/min
TANK CAPACITY:	30 lt	42 lt
POWER CONSUPTION:	1400 W	2400 W
CONNECTION:	ø 40 mm	ø 40 mm



AGSH



EQUIPPED WITH CLASS H CERTIFICATION, RELATING TO ALL HIGH-RISK DUST SUCH AS ASBESTOS. THE ASPIRATOR FILTER RETAINS OVER 99.995% OF DUST WITH A GRAIN SIZE OF LESS THAN 1 MICRON (INCLUDING CARCINOGENIC DUST AND DUST CONTAMINATED WITH CARCINOGENIC AND / OR PATHOGENIC AGENTS).

CODE:	RUD15102	RUD15162
POWER:	1200 W	2400 W
POWER SUPPLY:	2470 mm H2O	2470 mm H2O
MAX FLOW:	200-240 V - 50 Hz	200-240 V - 50 Hz
TANK CAPACITY:	210 m3/h	420 m3/h
POWER CONSUPTION:	33 lt isteel	62 lt steel
CONNECTION:	10.500 cm2	10.500 cm2
PRICE:	ø 38 mm	ø 38 mm
PRICE:	**€ 1.300,00**	**€ 1.500,00**

PRESSURE WASHERS

COLD WATER



PRESSURE WASHER VS 1600

CODE	0231600
MAX PRESSURE:	150 bar
FLOW:	8 lt/min
HOSE LENGHT:	6 m
POWER:	3 Hp (2,3 kW)
MOTOR:	230 V 50 Hz

PRESSURE WASHER VS 2500

CODE	0232500
MAX PRESSURE:	150 bar
FLOW:	10 lt/min
HOSE LENGHT:	10 m
POWER:	3 Hp (2,2 kW)
MOTOR:	230 V 50 Hz



COLD WATER

COLD WATER



PRESSURE WASHER VS 2800

CODE	0232800
MAX PRESSURE:	310 bar
FLOW:	15 lt/min
HOSE LENGHT:	10 m
POWER:	13 Hp (9,7 kW)
MOTOR:	GAsoline engine

PRESSURE WASHERS

COLD WATER



COMPLETE WITH 1200MM ATHERMIC LANCE WITH PROFESSIONAL GUN AND 10M HOSE

PRESSURE WASHER HEAVY DUTY BXS

DESIGNED FOR DAILY USE IN CLEANING BUILDINGS, MACHINERY, VEHICLES AND APPLIANCES.
EXCELLENT FOR CLEANING OF ENCRUSTED AND STUBBORN DIRT, WITH THEIR PRESSURE AND FLOW RATE,
HEAVY DUTY PRESSURE WASHERS FAVOR THE WASHING OF LARGE SURFACES WITH REDUCED CONSUMPTION.

CODE:	023341	023342
MAX PRESSURE:	500 bar	500 bar
FLOW:	15 lt/min	21 lt/min
SPEED:	1450 g/min	1450 g/min
HOSE LENGHT:	10 m	10 m
POWER:	25 Cv (18,6 kW)	30 Cv (22kW)
MOTOR:	Petrol engine	Electric 400 V

PRESSURE WASHERS

COLD WATER





COMPLETE WITH LANCE WITH 920MM AUTOMATIC GUN AND 10M HOSE

PRESSURE WASHER BTK

PROFESSIONAL STAND-ALONE UNIT WITH GASOLINE OR ELECTRIC DESIGNED FOR DAILY AND INTENSIVE CLEANING OF BUILDINGS, MACHINERY, VEHICLES AND APPLIANCES.

CODE:	023143	023144	023344
MAX PRESSURE:	200 bar	300 bar	280 bar
FLOW:	21 lt/min	18 lt/min	18 lt/min
SPEED:	1450 g/min	1450 g/min	1450 g/min
HOSE LENGHT:	10 m	10 m	10 m
POWER:	10 Cv (7,5 kW)	15 Cv (11kW)	15 Cv (11kW)
MOTOR:	400 V 50 Hz	400 V 50 Hz	Petrol engine

PRESSURE WASHERS



COLD WATER

PRESSURE WASHER BKC

PROFESSIONAL AND COMPACT STAND-ALONE UNIT COMPLETE WITH PROFESSIONAL LANCE AND 10 M HOSE

CODE:	023154
MAX PRESSURE:	150 bar
FLOW:	10 lt/min
SPEED:	1450 g/min
HOSE LENGHT:	10 m
POWER:	3 Hp (2,2 kW)
MOTOR:	230 V 50 Hz

PRESSURE WASHER BHP

SUITABLE FOR CLEANING ENCRUSTED DIRT, IT ALLOWS THE WASHING OF LARGE SURFACES WITH REDUCED POWER CONSUMPTION.

CODE:	023135
MAX PRESSURE:	140 bar
FLOW:	10 lt/min
SPEED:	2800 g/min
HOSE LENGHT:	10 m
POWER:	3 Hp(2,2 kW)
MOTOR:	230 V 50 Hz



HOT WATER



HOT WATER

PRESSURE WASHER BSA

PROFESSIONAL AND COMPACT STAND-ALONE UNIT COMPLETE WITH PROFESSIONAL LANCE AND 10 M HOSE

CODE:	023243
MAX PRESSURE:	200 bar
FLOW:	21 lt/min
SPEED:	1450 g/min
HOSE LENGHT:	10 m
POWER:	10 Hp (7,5 kW)
MOTOR:	400 V 50 Hz

ATTENTION: HOT WATER PUMPS NEED GASOLINE TO START UP THE BOILER

PRESSURE WASHERS ACCESSORIES

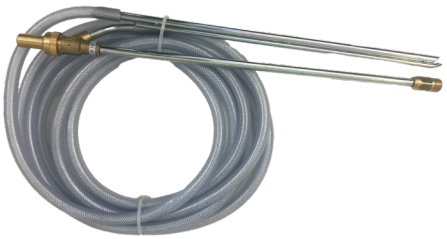

CODE	DESCRIPTION
3.020.22.023	Sandblasting kit for pressure up to maximum 350 bar

CODE	DESCRIPTION
G-06WW03	Extended lance for pressure up to maximum 310 bar
G06W001	Extended lance max pressure 310 bar with G 3/8F inlet and M22x1.5 outlet
G06W002	Extension for pressure washer lance 500mm inlet M22x1.5 and quick coupling outlet ø12





CODE	DESCRIPTION
11136-G-09	Lance for pressure up to maximum 224 bar

CODE	DESCRIPTION
91334	Hose 10 m for max pressure up to 400 bar
91335	Hose 20 m for max pressure up to 400 bar



UGTR0006



UGTR0003

UGTR0004
UGTR0005



CODE	DESCRIPTION
UGTR0003	Round nozzle for max pressure up to 250 bar
UGTR0004	Round rotating nozzle for max pressure up to 250 bar
UGTR0005	Round rotating nozzle for max pressure up to 400 bar
UGTR0006	Round rotating nozzle for max pressure up to 600 bar

CODE	DESCRIPTION
801514	Quick fitting for coupling pressure washers ø15 F 1/4” type B
801538	Quick fitting for coupling pressure washers ø15 F 3/8” type B
801214	Quick fitting for coupling pressure washers ø12 M 1/4” type B
811538	Quick fitting for coupling pressure washers ø15 F 3/8” type A
811514	Quick fitting for coupling pressure washers ø12 F 1/4'' type A

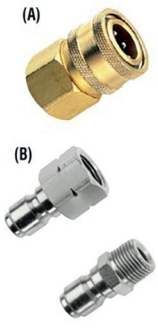

SPRAY GUNS AND ACCESSORIES

AUTOMATIC SPRAY GUNS FOR PAINTING SYSTEMS AND AUTOMATIZED ROBOT

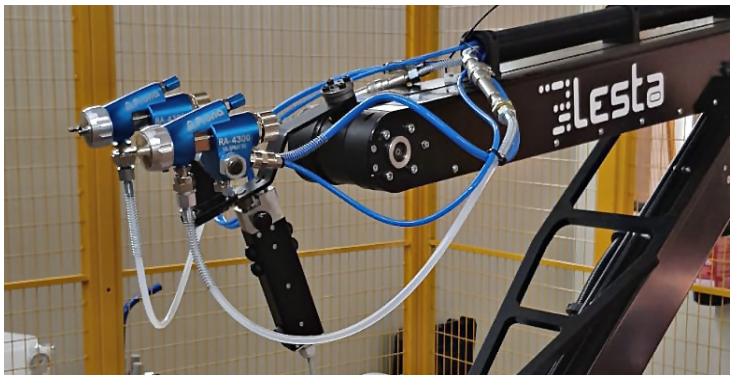



ACCESSORIES AND SPARE PARTS FOR SPRAY PUMPS COMPATIBLE AND ORIGINAL

SPARE PARTS, FILTERS AND ACCESSORIES FOR SPRAY PAINTING CABINS

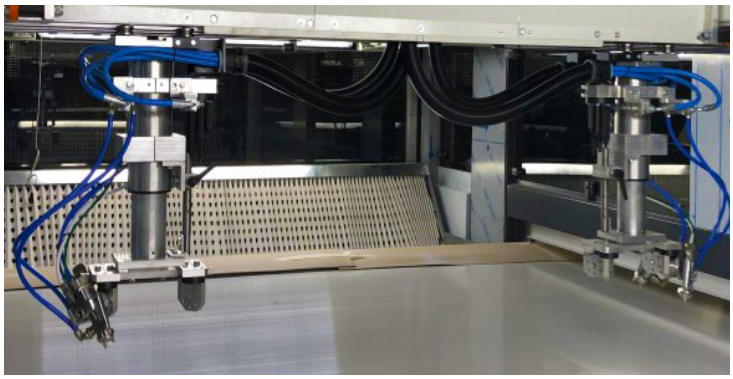



COMPATIBLE SPARE PARTS MADE IN OUR PRODUCTION AND SUITABLE FOR ALL BRANDS ON THE MARKET

MANUAL SPRAY GUNS WITH SUPERIOR CUP, INFERIOR CUP AND FITTING FOR PUMPS



SPRAY GUNS LOW PRESSURE UPPER CUP



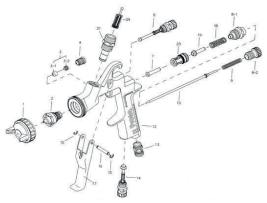

SPARE PARTS EXPLODED VIEW VS703
Pag. 329

NOZZLE AND NEEDLE IN STAINLESS STEEL

STANDARD SPARE PARTS



STANDARD CUP
Cod. RC6RM
PRESSURE CUP Cod. RC6RMP



AIR FLOW REGULATOR ø6MM
Cod. RG10PRE



NOZZLE KIT
Cod. VS7S4001XX

MANUAL SPRAY GUN VS 703

CODE	FLUID NOZZLE Ø MM	AIR NOZZLE	PRESSURE BAR	AIR CONSUMPTION LT/MIN	FLUID OUTPUT ML/MIN	FAN WIDTH +-20MM
VS70312	1.2	VLSVB2	2.0-3.0	320	160	230-250
VS70314	1.4	VLSVB2	2.0-3.0	320	215	250-275
VS70316	1.6	VLSVB2	2.0-3.0	320	275	300-340
VS70318	1.8	VLSVB1	2.0-3.0	320	330	330-355
VS70320	2.0	VWS2B	2.0-3.0	320	390	320-350
VS70325	2.5	VWS2B	2.5-3.0	320	510	320

MANUAL SPRAY GUN VS 703 PRESSURE

CODE	FLUID NOZZLE Ø MM	AIR NOZZLE	PRESSURE BAR	AIR CONSUMPTION LT/MIN	FLUID OUTPUT ML/MIN	FAN WIDTH +-20MM
VS703P12	1.2	VLSVB2	2.0-3.0	320	160	230-250
VS703P14	1.4	VLSVB2	2.0-3.0	320	215	250-275
VS703P16	1.6	VLSVB2	2.0-3.0	320	275	300-340
VS703P18	1.8	VLSVB1	2.0-3.0	320	330	330-355
VS703P20	2.0	VWS2B	2.0-3.0	320	390	320-350
VS703P25	2.5	VWS2B	2.5-3.0	320	510	320

SPRAY GUNS LOW PRESSURE UPPER CUP





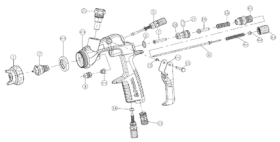

SPARE PARTS EXPLODED VIEW VS830
Pag. 330

NOZZLE AND NEEDLE IN STAINLESS STEEL

STANDARD SPARE PARTS:



STANDARD CUP
Cod. RC6RM



ALLUMINIUM CUP
Cod. RC6AIT



NOZZLE KIT
Cod. 830R1XX

MANUAL SPRAY GUN VS 830

CODE	FLUID NOZZLE Ø MM	AIR NOZZLE	PRESSURE BAR	AIR CONSUMPTION LT/MIN	FLUID OUTPUT ML/MIN	FAN WIDTH +-20 MM
VS80312	1.2	VLSVB2	2.0-3.0	320	160	230-250
VS80314	1.4	VLSVB2	2.0-3.0	320	215	250-275
VS80316	1.6	VLSVB2	2.0-3.0	320	275	300-340
VS80318	1.8	VLSVB2	2.0-3.0	320	330	330-355
VS80320	2.0	VLSVB2	2.0-3.0	320	410	320
VS80325	2.5	VWS2B	2.5-3.0	320	510	320

SPRAY GUN VS 830 METALLIC CUP

CODE	FLUID NOZZLE Ø MM	AIR NOZZLE	PRESSURE BAR	AIR CONSUMPTION LT/MIN	FLUID OUTPUT ML/MIN	FAN WIDTH +-20 MM
VS80312M	1.2	VLSVB2	2.0-3.0	320	160	230-250
VS80314M	1.4	VLSVB2	2.0-3.0	320	215	250-275
VS80316M	1.6	VLSVB2	2.0-3.0	320	275	300-340
VS80318M	1.8	VLSVB2	2.0-3.0	320	330	330-355
VS80320M	2.0	VLSVB2	2.0-3.0	320	410	320
VS80325M	2.5	VWS2B	2.5-3.0	320	510	320

SPRAY GUNS LOW PRESSURE UPPER CUP

NOZZLE AND NEEDLE IN STAINLESS STEEL



SPECIAL VERSION WITH MIXER AND REGULATOR FOR CERAMICS, CEMENTITIOUS AN METALLIC PRODUCTS
Cod. VS803AGXX
Price: **€ 427,00**



STANDARD SPARE PARTS:



PRESSURE CUP
Cod. RC6RMP



ALLUMINIUM CUP
Cod. RC6MIT



FLUID REGULATOR
ø4MM
Cod. RG00PRE

SPRAY GUN VS 830 PRESSURE

CODE	FLUID NOZZLE Ø MM	AIR NOZZLE	PRESSURE BAR	AIR CONSUMPTION LT/MIN	FLUID OUTPUT ML/MIN	FAN WIDTH +-20 MM
VSP80314	1.4	VLSVB2	2.0-3.0	320	215	250-275
VSP80316	1.6	VLSVB2	2.0-3.0	320	275	300-340
VSP80318	1.8	VLSVB2	2.0-3.0	320	330	330-355
VSP80320	2.0	VLSVB2	2.0-3.0	320	390	320-350
VSP80325	2.5	VWS2B	2.5-3.0	320	510	320

SPRAY GUN VS 830 PRESSURE METALLIC CUP

CODE	FLUID NOZZLE Ø MM AIR	AIR NOZZLE	PRESSURE BAR	AIR CONSUMPTION LT/MIN	FLUID OUTPUT	FAN WIDTH +-20 MM
VSP80314M	1.4	VLSVB2	2.0-3.0	320	215	250-275
VSP80316M	1.6	VLSVB2	2.0-3.0	320	275	300-340
VSP80318M	1.8	VLSVB2	2.0-3.0	320	330	330-355
VSP80320M	2.0	VLSVB2	2.0-3.0	320	390	320-350
VSP80325M	2.5	VWS2B	2.5-3.0	320	510	320

SPRAY GUNS LOW PRESSURE UPPER CUP





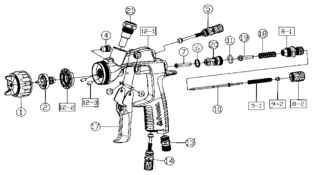

SPARE PARTS EXPLODED VIEW VS4300
Pag. 331

NOZZLE AND NEEDLE IN STAINLESS STEEL

Cup diffuser

Cod. 4300R132
€ 31,00

STANDARD SPARE PARTS:



STANDARD CUP
Cod. RC6RM
PRESSURE CUP
Cod. RC6RMP



FLUID REGULATOR ø4MM
Cod. RG00PRE



NOZZLE KIT
Cod. 4300R1XX

MANUAL SPRAY GUN VS 4300

CODE	FLUID NOZZLE Ø MM	AIR NOZZLE	PRESSURE BAR	AIR CONSUMPTION LT/MIN	FLUID OUTPUT ML/MIN	FAN WIDTH +-20 MM
VS400312	0.8	MP	2.0-2.5	340	330	200-320
VS400312	1.2	MP	2.0-2.5	340	350	200-320
VS400314	1.3	MP	2.0-2.5	340	360	200-320
VS400316	1.4	MP	2.0-2.5	340	370	200-320
VS400318	1.5	MP	2.0-2.5	340	400	200-320
VS400320	1.8	MP	2.0-2.5	340	435	200-320
VS400322	2.0	MP	2.0-2.5	340	450	200-320
VS400324	2.2	MP	2.0-2.5	340	470	200-320

MANUAL SPRAY GUN VS 4300 PRESSURE

CODE	FLUID NOZZLE Ø MM	AIR NOZZLE	PRESSURE BAR	AIR CONSUMPTION LT/MIN	FLUID OUTPUT ML/MIN	FAN WIDTH +-20 MM
VSP400316	1.4	MP	2.0-2.5	340	370	200-320
VSP400320	1.8	MP	2.0-2.5	340	435	200-320
VSP400322	2.0	MP	2.0-2.5	340	450	200-320
VSP400324	2.2	MP	2.0-2.5	340	470	200-320

SPRAY GUNS LOW PRESSURE UPPER CUP





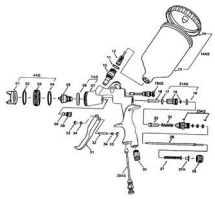

SPARE PARTS EXPLODED VIEW AM5008
Pag. 335

NOZZLE AND NEEDLE IN STAINLESS STEEL

STANDARD SPARE PARTS:



STANDARD CUP
Cod. RARC6R
PRESSURE CUP
Cod. RARC6RP



AIR FLOW REGULATOR ø4MM
Cod. RG00PRE



NOZZLE KIT
Cod. 508L3XX

MANUAL SPRAY GUN AM 5008

CODE	FLUID NOZZLE Ø MM	AIR NOZZLE	PRESSURE BAR	AIR CONSUMPTION LT/MIN	FLUID OUTPUT ML/MIN	FAN WIDTH +-20 MM
508L100	1.0	LVLP	1.0 - 2.0	196	120	320
508L130	1.3	LVLP	1.0 - 2.0	196	150	320
508L150	1.5	LVLP	1.0 - 2.0	196	170	320
508L180	1.8	LVLP	1.0 - 2.0	196	200	320
508L200	2.0	LVLP	1.0 - 2.0	196	250	320
508L250	2.5	LVLP	1.0 - 2.0	196	280	320

MANUAL SPRAY GUN AM 5008 PRESSURE

CODE	FLUID NOZZLE Ø MM	AIR NOZZLE	PRESSURE BAR	AIR CONSUMPTION LT/MIN	FLUID OUTPUT ML/MIN	FAN WIDTH +-20 MM
508LWP13	1.3	LVLP	1.0 - 2.0	196	150	320
508LWP15	1.5	LVLP	1.0 - 2.0	196	170	320
508LWP18	1.8	LVLP	1.0 - 2.0	196	200	320
508LWP20	2.0	LVLP	1.0 - 2.0	196	250	320
508LWP25	2.5	LVLP	1.0 - 2.0	196	280	320

SPRAY GUNS LOW PRESSURE UPPER CUP





SPARE PARTS EXPLODED VIEW VSZ3
Pag.336

NOZZLE AND NEEDLE IN STAINLESS STEEL

STANDARD SPARE PARTS:



STANDARD CUP
Cod. Z3R0024
PRESSURE CUP
Cod. Z3R0024P



AIR FLOW REGULATOR ø4MM
Cod. RG00PRE



NOZZLE, NEEDLE AND AIR CAP KIT
Cod. Z3RK1XX

MANUAL SPRAY GUN VS Z3

CODE	FLUID NOZZLE Ø MM	PRESSURE BAR	AIR CONSUMPTION LT/MIN	FLUID OUTPUT	FAN WIDTH +-20 MM
VSZ3S13	1.3	3.0 -3.5	380	300	320
VSZ3S15	1.5	3.0 -3.5	380	300	320
VSZ3S17	1.7	3.0 -3.5	380	300	320
VSZ3S20	2.0	3.0 -3.5	380	300	320
VSZ3S25	2.5	3.0 -3.5	380	300	320

MANUAL SPRAY GUN VS Z3 PRESSURE

CODE	Ø MM FLUID NOZZLE	PRESSURE BAR	AIR CONSUMPTION LT/MIN	FLUID OUTPUT	FAN WIDTH +-20 MM
VSZ3P13	1.3	3.0 -3.5	380	300	320
VSZ3P15	1.5	3.0 -3.5	380	300	320
VSZ3P17	1.7	3.0 -3.5	380	300	320
VSZ3P20	2.0	3.0 -3.5	380	300	320
VSZ3P25	2.5	3.0 -3.5	380	300	320

SPRAY GUNS LOW PRESSURE UPPER CUP





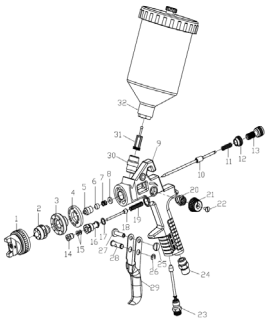

SPARE PARTS EXPLODED VIEW VS827

NOZZLE AND NEEDLE IN STAINLESS STEEL

RELATED PRODUCTS:



STANDARD CUP
Cod. RARC6R827
PRESSURE CUP
Cod. RARC6RP



AIR FLOW REGULATOR ø4MM
Cod. RG00PRE



NOZZLE KIT
Cod. 8274XX

MANUAL SPRAY GUN VS 827

CODE	FLUID NOZZLE Ø MM	PRESSURE BAR	AIR CONSUMPTION LT/MIN	FLUID OUTPUT	FAN WIDTH +-20 MM
827120	1.2	3.0 -3.5	320	300	300
827140	1.4	3.0 -3.5	320	300	300
827170	1.7	3.0 -3.5	320	300	300
827200	2.0	3.0 -3.5	320	300	300
827250	2.5	3.0 -3.5	320	300	300
827300	3.0	3.0 -3.5	320	300	300
827400	4.0	3.0 -3.5	320	300	300

MANUAL SPRAY GUN VS 827 PRESSURE

CODE	FLUID NOZZLE	PRESSURE BAR	AIR CONSUMPTION LT/MIN	FLUID OUTPUT	FAN WIDTH +-20 MM
827P170	1.7	3.0 -3.5	320	300	300
827P200	2.0	3.0 -3.5	320	300	300
827P250	2.5	3.0 -3.5	320	300	300
827P300	3.0	3.0 -3.5	320	300	300
827P400	4.0	3.0 -3.5	320	300	300

SPRAY GUNS LOW PRESSURE





STANDARD SPARE PARTS:

CUP E70 600CC
Cod. E70TN60
CUP E70 1000CC
Cod. E70TA10 €



NOZZLE KIT
Cod. E70KXXX

CUP FILTER
Cod. 23113

STANDARD SPARE PARTS:



NOZZLE KIT
Cod. G70KXXX

NEEDLE GASKET KIT
Cod. 70PR34



CUP FILTER
Cod. 23001

MANUAL SPRAY GUN E 70

CODE	FLUID NOZZLE Ø MM	PRESSURE
E70000112	1.2	3.5 - 4.5
E70000114	1.4	3.5 - 4.5
E70000115	1.5	3.5 - 4.5
E70000116	1.6	3.5 - 4.5
E70000118	1.8	3.5 - 4.5
E70000120	2.0	3.5 - 4.5
E70000122	2.2	3.5 - 4.5
E70000125	2.5	3.5 - 4.5
E70000130	3.0	3.5 - 4.5
E70000140	4.0	3.5 - 4.5

MANUAL SPRAY GUN G 70

CODE	FLUID NOZZLE Ø MM	PRESSURE
G70000112	1.2	3.5 - 4.5
G70000114	1.4	3.5 - 4.5
G70000115	1.5	3.5 - 4.5
G70000116	1.6	3.5 - 4.5
G70000118	1.8	3.5 - 4.5
G70000120	2.0	3.5 - 4.5
G70000122	2.2	3.5 - 4.5
G70000125	2.5	3.5 - 4.5
G70000130	3.0	3.5 - 4.5
G70000140	4.0	3.5 - 4.5

MINI SPRAY GUNS LOW PRESSURE UPPER CUP



MANUAL SPRAY GUN RL-90 F/R

CODE	FLUID NOZZLE	PRESSURE BAR	AIR CONSUMPTION LT/MIN	FAN WIDTH +-20 MM
RL-90F04	0.4	0.9-1.5	40	40
RL-90F06	0.6	0.9-1.5	70	60
RL-90F08	0.8	0.9-1.5	70	80
RL-90F10	1.0	0.9-1.5	70	100
RL-90R04	0.4	0.9-1.5	30	25
RL-90R06	0.6	0.9-1.5	50	35
RL-90R08	0.8	0.9-1.5	50	35
RL-90R10	1.0	0.9-1.5	50	40

STANDARD SPARE PART



CUP RL-90 150cc
Cod. RC-51M00

MANUAL SPRAY GUN R2 R/F

CODE	FLUID NOZZLE	PRESSURE BAR	AIR CONSUMPTION LT/MIN	FAN WIDTH +-20 MM
R2F005	0.5	1.8-2.5	20	50
R2F008	0.8	1.8-2.5	60	80
R2R005	0.5	1.8-2.5	20	30
R2R008	0.8	1.8-2.5	60	35

STANDARD SPARE PART:



CUP R2 150cc
Cod. PRC5114





MANUAL SPRAY GUN AH 2000

CODE	FLUID NOZZLE	PRESSURE BAR	AIR CONSUMPTION LT/MIN	FAN WIDTH +-20 MM
828050	0.5	3.0	70	50
828080	0.8	3.0	85	70
828100	1.0	3.0	85	80
828120	1.2	3.0	100	100
828150	1.5	3.0	100	120

STANDARD SPARE PART:



CUP AH 2000 125cc
Cod. 828012A

SPRAY GUNS FOR THE CAR INDUSTRY





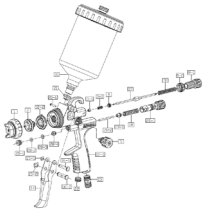

SPARE PARTS EXPLODED VIEW VS 7600
Pag. 332

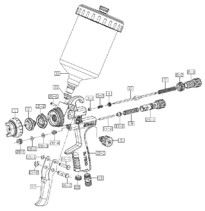

SPARE PARTS EXPLODED VIEW VS 7800
Pag. 333

STANDARD SPARE PARTS:



STANDARD CUP
Cod. RC6RM



NOZZLE KIT
Cod. 760R1XX



NOZZLE KIT
Cod. 780R1XX

MANUAL SPRAY VS 7600

CODE	FLUID NOZZLE Ø MM	PRESSURE BAR	AIR CONSUMPTION LT/MIN	FLUID OUTPUT ML/MIN	FAN WIDTH
VS760010	1.0	2.0 - 2.5	280 - 300	300	+-20 MM
VS760011	1.1	2.0 - 2.5	280 - 300	340	200 - 320
VS760012	1.2	2.0 - 2.5	280 - 300	350	200 - 320
VS760013	1.3	2.0 - 2.5	280 - 300	360	200 - 320
VS760014	1.4	2.0 - 2.5	280 - 300	370	200 - 320
VS760015	1.5	2.0 - 2.5	280 - 300	400	200 - 320
VS760017	1.7	2.0 - 2.5	280 - 300	420	200 - 320

MANUAL SPRAY VS 7800

CODE	FLUID NOZZLE	PRESSURE BAR	AIR CONSUMPTION LT/MIN	FLUID OUTPUT ML/MIN	FAN WIDTH
VS780010	1.0	2.0 - 2.5	280 - 300	300	200 - 320
VS780011	1.1	2.0 - 2.5	280 - 300	340	200 - 320
VS780012	1.2	2.0 - 2.5	280 - 300	350	200 - 320
VS780013	1.3	2.0 - 2.5	280 - 300	360	200 - 320
VS780014	1.4	2.0 - 2.5	280 - 300	370	200 - 320
VS780015	1.5	2.0 - 2.5	280 - 300	400	200 - 320
VS780017	1.7	2.0 - 2.5	280 - 300	420	200 - 320

PAINT SPRAY GUNS FOR THE CAR INDUSTRY





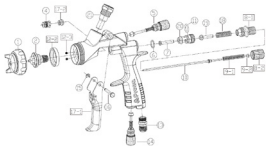

SPARE PARTS EXPLODED VIEW VS 4630
Pag. 334

STANDARD SPARE PARTS:



STANDARD CUP
Cod. RC6RM



NOZZLE KIT
Cod. 760R1XX

MANUAL SPRAY GUN VS 4630

CODE	FLUID NOZZLE Ø MM	PRESSURE BAR	AIR CONSUMPTION LT/MIN	FLUID OUTPUT ML/MIN	FAN WIDTH +-20 MM
VS463010	1.0	2.0 - 2.5	280 - 300	300	200 - 320
VS463011	1.1	2.0 - 2.5	280 - 300	340	200 - 320
VS463012	1.2	2.0 - 2.5	280 - 300	350	200 - 320
VS463013	1.3	2.0 - 2.5	280 - 300	360	200 - 320
VS463014	1.4	2.0 - 2.5	280 - 300	370	200 - 320
VS463015	1.5	2.0 - 2.5	280 - 300	400	200 - 320
VS463018	1.8	2.0 - 2.5	280 - 300	420	200 - 320
VS463020	2.0	2.0 - 2.5	280 - 300	480	200 - 320

MANUAL SPRAY GUN VS 4630 PRESSURE

CODE	FLUID NOZZLE Ø MM	PRESSURE BAR	AIR CONSUMPTION LT/MIN	FLUID OUTPUT ML/MIN	FAN WIDTH +-20 MM
4630P14	1.4	2.0-2.5	280-300	370	200-300
4630P18	1.8	2.0-2.5	280-300	420	200-300
4630P20	2.0	2.0-2.5	280-300	480	200-300

PAINT SPRAY GUNS FOR THE CAR INDUSTRY



STANDARD SPARE PARTS:



STANDARD CUP
Cod. RC6RM

MANUAL SPRAY GUN LS20 - HVLP

CODE	FLUID NOZZLE Ø MM	PRESSURE BAR	AIR CONSUMPTION LT/MIN	FLUID OUTPUT ML/MIN	FAN WIDTH +-20 MM
20LS13	1.3	2.0	300	360	200 - 350
20LS14	1.4	2.0	300	370	200 - 350
20LS17	1.7	2.0	300	410	200 - 350

SPRAY GUNS KIT BOX

KIT BOX VS 703 STANDARD

VSB703XX
1 Spray gun VS 703
3 Cup filter
1 Needle gasket kit
1 Cleaning brush
1 Key tool









KIT BOX VS 703 PRESSURE

VS703BPXX
1 Spray gun VS 703 pressure
3 Cup filter
1 Needle gasket kit
1 Cleaning brush
1 Key tool

KIT BOX VS 827 STANDARD

BX827XXX
1 Spray gun VS 827
3 Cup filter
1 Needle gasket kit
1 Cleaning brush
1 Key tool





SPRAY GUNS KIT BOX

KIT BOX VS 827 PRESSURE

PBX827XXX

- 1 SPRAY GUN 827 PRESSURE
- 3 CUP FILTERS
- 1 NEEDLE GASKET KIT
- 1 CLEANING BRUSH
- 1 KEY TOOL









KIT BOX VS 4300 STANDARD

R4300BPXX

- 1 SPRAY GUN VS 4300
- 3 CUP FILTER
- 1 NEEDLE GASKET KIT
- 1 CLEANING BRUSH
- 1 KEY TOOL

KIT BOX VS 4300 PRESSURE

PR4300BPXX

- 1 SPRAY GUN 4300 PRESSURE
- 3 CUP FILTERS
- 1 NEEDLE GASKET KIT
- 1 CLEANING BRUSH
- 1 KEY TOOL





SPRAY GUNS KIT BOX

KIT BOX VS 830 STANDARD

RVS830BPXX
1 Spray gun VS 830
3 Cup filter
1 Needle gasket kit
1 Cleaning brush
1 Key tool









KIT BOX VS 830 PRESSURE

PRVS830BPXX
1 Spray gun VS 830 pressure
3 Cup filter
1 Needle gasket kit
1 Cleaning brush
1 Key tool

KIT BOX AM5008 STANDARD

508LXXK2
1 Spray gun AM 5008
3 Cup filter
1 Needle gasket kit
1 Cleaning brush
1 Air regulator R11
1 Key tool





SPRAY GUNS LOW PRESSURE KIT BOXES

KIT BOX VS 7600

PB760XXX
1 SPRAY GUN VS 7600
3 CUP FILTER
1 NEEDLE GASKET KIT
1 CLEANING BRUSH
1 KEY TOOL









KIT BOX VS 7800

PB780XX
1 SPRAY GUN VS 7800
1 CUP FILTER
1 NEEDLE GASKET KIT
1 CLEANING BRUSH
1 KEY TOOL

KIT BOX VS 4630

PB460XX
1 SPRAY GUN VS 4630
3 CUP FILTERS
1 NEEDLE GASKET KIT
1 CLEANING BRUSH
1 KEY TOOL





SPRAY GUNS LOW PRESSURE SUCTION CUP





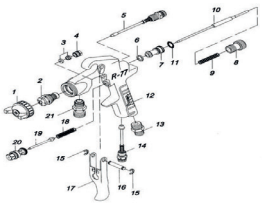

SPARE PARTS EXPLODED VIEW R77
Pag. 347

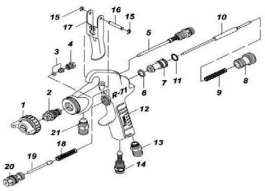

SPARE PARTS EXPLODED VIEW R71
Pag. 346

STANDARD SPARE PARTS



CUP R77
Cod. RC138



CUP R71
Cod. RC214

MANUAL SPRAY GUN R77 IP

CODE	FLUID NOZZLE Ø MM	PRESSURE BAR	AIR CONSUMPTION LT/MIN	FLUID OUTPUT ML/MIN	FAN WIDTH +-20 MM
IP770012	1.2	3.0-3.5	430	180	380
IP770015	1.5	3.0-3.5	290	250	260
IP770020	2.0	3.0-3.5	360	370	290
IP770025	2.5	3.0-3.5	460	440	300

MANUAL SPRAY GUN R71 IP

CODE	FLUID NOZZLE	PRESSURE BAR	AIR CONSUMPTION LT/MIN	FLUID OUTPUT ML/MIN	FAN WIDTH +-20 MM
I710008	0.8	2.5-3.0	70	80	90
I710010	1.0	2.5-3.0	75	100	100
I710013	1.3	2.5-3.0	195	140	155
I710015	1.5	2.5-3.0	230	170	170
I710018	1.8	2.5-3.0	250	220	180

SPRAY GUNS LOW PRESSURE SUCTION CUP





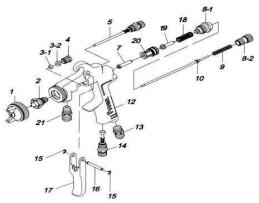

SPARE PARTS EXPLODED VIEW VS503
Pag. 340

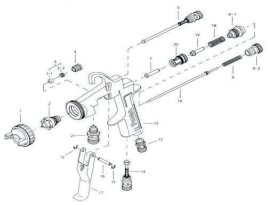

SPARE PARTS EXPLODED VIEW VS603
Pag. 341

STANDARD SPARE PARTS:



CUP VS603T
Cod. RCL10B



CUP VS503T
Cod. RCL7B

NOZZLE AND NEEDLE IN STAINLESS STEEL

MANUAL SPRAY GUN VS 603T

CODE	FLUID NOZZLE Ø MM	AIR NOZZLE	PRESSURE BAR	AIR CONSUMPTION LT/MIN	FLUID OUTPUT ml/min	FAN WIDTH +-20 MM
VS60312VT	1.2	VLSVB2	2.5	370	400	400
VS60315T	1.5	VKS2B	2.5	330	270	340
VS60318T	1.8	VKS2B	2.5	290	290	340
VS60320T	2.0	VRS2B	2.5	360	410	320
VS60325T	2.5	VWS2B	2.5	360	510	330

MANUAL SPRAY GUN VS 503T

CODE	FLUID NOZZLE Ø MM	AIR NOZZLE	PRESSURE BAR	AIR CONSUMPTION LT/MIN	FLUID OUTPUT	FAN WIDTH +-20 MM	PRICE
VS50308T	0.8	VHS2B	2.5	115	85	130	
VS50310T	1.0	VHS2B	2.5	130	85	200	
VS50313T	1.3	VHS2B	2.5	150	150	160	
VS50315T	1.5	VHS2B	2.5	225	170	175	
VS50318T	1.8	VHS2B	2.5	110	210	170	

SPRAY GUNS LOW PRESSURE SUCTION CUP





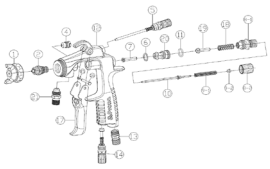

SPARE PARTS EXPLODED VIEW R715
Pag. 342

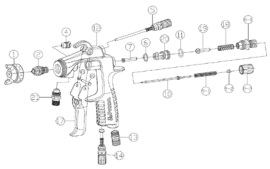

SPARE PARTS EXPLODED VIEW R775
Pag. 343

STANDARD SPARE PARTS:



CUP R775P
Cod. RCL10B



CUP R715P
Cod. RCL7B

NOZZLE AND NEEDLE IN STAINLESS STEEL

MANUAL SPRAY GUN R775 P

CODE	FLUID NOZZLE	PRESSURE BAR	AIR CONSUMPTION LT/MIN	FLUID OUTPUT ML/MIN	FAN WIDTH +-20 MM
R775P770012	1.2	3.5	430	480	380
R775P770015	1.5	3.5	290	250	260
R775P770020	2.0	3.5	360	370	290
R775P770025	2.5	3.5	460	440	300

MANUAL SPRAY GUN R715 P

CODE	FLUID NOZZLE	PRESSURE BAR	AIR CONSUMPTION LT/MIN	FLUID OUTPUT ML/MIN	FAN WIDTH +-20 MM
R715P710008	0.8	3.5	240	200	190
R715P710010	1.0	3.5	75	95	100
R715P710013	1.3	3.5	195	140	155
R715P710015	1.5	3.5	230	170	170
R715P710018	1.8	3.5	250	220	180

SPRAY GUNS LOW PRESSURE SUCTION CUP





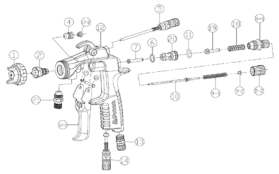

SPARE PARTS EXPLODED VIEW VS820
Pag. 345

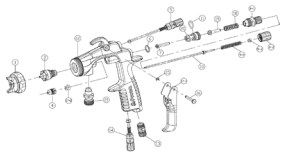

SPARE PARTS EXPLODED VIEW VS810
Pag. 344

STANDARD SPARE PARTS:



CUP VS820
Cod. RCL10B



CUP VS810
Cod. RCL7B

NOZZLE AND NEEDLE IN STAINLESS STEEL

MANUAL SPRAY GUN VS820 T

CODE	FLUID NOZZLE	PRESSURE BAR	AIR CONSUMPTION LT/MIN	FLUID OUTPUT ML/MIN	FAN WIDTH +-20 MM
VS82012VT	1.2	2.5-3.0	560	400	350
VS82015T	1.5	2.5-3.0	330	270	340
VS82018T	1.8	2.5-3.0	290	290	340
VS82020T	2.0	2.5-3.0	360	410	320
VS82025T	2.5	2.5-3.0	360	510	330

AMANUAL SPRAY GUN VS810 T

CODE	FLUID NOZZLE	PRESSURE BAR	AIR CONSUMPTION LT/MIN	FLUID OUTPUT ML/MIN	FAN WIDTH +-20 MM
VS81008T	0.8	2.5-3.0	270	150	190
VS81010T	1.0	2.5-3.0	145	95	200
VS81013T	1.3	2.5-3.0	225	160	175
VS81015T	1.5	2.5-3.0	145	200	180
VS81018T	1.8	2.5-3.0	150	240	190

SPRAY GUNS LOW PRESSURE SUCTION CUP





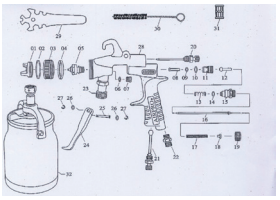

SPARE PARTS EXPLODED VIEW AM6008
Pag. 348

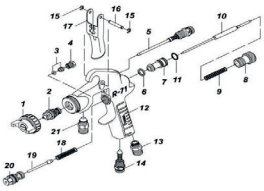

SPARE PARTS EXPLODED VIEW R71
Pag. 346

STANDARD SPARE PARTS:



CUP AM6008
Cod. RCL10B



CUP RC-17R
Cod. RC-17R00

NOZZLE AND NEEDLE IN STAINLESS STEEL

MANUAL SPRAY GUN AM6008 LVLP-S

CODE	FLUID NOZZLE Ø MM	AIR NOZZLE	PRESSURE BAR	AIR CONSUMPTION LT/MIN AIR
608SL100	1.0	LVLP	2.0-3.0	198
608SL120	1.2	LVLP	2.0-3.0	198
608SL150	1.5	LVLP	2.0-3.0	198
608SL180	1.8	LVLP	2.0-3.0	198
608SL200	2.0	LVLP	2.0-3.0	198
608SL250	2.5	LVLP	2.5-3.0	198

MANUAL SPRAY GUN SGD71

CODE	FLUID NOZZLE Ø MM	AIR NOZZLE	PRESSURE BAR	AIR CONSUMPTION LT/MIN AIR
SGD100	1.0	1.0-2.5	80	80
SGD150	1.5	1.0-2.5	120	160
SGD120	2.0	1.0-2.5	140	240

SPRAY GUNS LOW PRESSURE SUCTION CUP

NOZZLE AND NEEDLE IN STAINLESS STEEL





STANDARD SPARE PARTS:



CUP 871
Cod. RC-19B00

MANUAL SPRAY GUN VS 603 PRESSURIZED

DESIGNED FOR DENSE PRODUCTS

CODE	FLUID NOZZLE	PRESSURE BAR	AIR CONSUMPTION LT/MIN	FLUID OUTPUT ML/MIN	FAN WIDTH +-20 MM	AIR CONSUMPTION
VS603P20	2.0	VRS2B	3.0	260	350	290
VS603P25	2.5	VWS2B	3.0	360	440	280

MANUAL SPRAY GUN PRESSURIZED 871

DESIGNED FOR DENSE PRODUCTS

CODE	FLUID NOZZLE	PRESSURE BAR	AIR CONSUMPTION LT/MIN	FLUID OUTPUT ML/MIN	FAN WIDTH +-20 MM	AIR CONSUMPTION
VR87160325	1.0	VR10W	3.0-4.0	140	440	100-250
VR87160225	2.5	VR25W	2.0-3.0	200	440	250-400

SPRAY GUNS LOW PRESSURE





NOZZLE AND NEEDLE IN STAINLESS STEEL

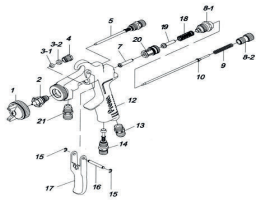

SPARE PARTS EXPLODED VIEW VS503
Pag. 341

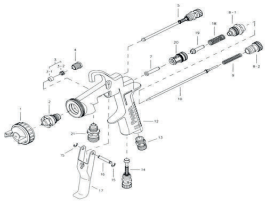

SPARE PARTS EXPLODED VIEW VS603
Pag. 340

STANDARD SPARE PARTS



NOZZLE KIT VS503
Cod. VS5P1001XX



NOZZLE KIT VS603
Cod. VS6P2001XX

MANUAL SPRAY GUN VS 603

CODE	FLUID NOZZLE Ø MM	AIR NOZZLE	PRESSURE BAR	AIR CONSUMPTION LT/MIN	FLUID OUTPUT ML/MIN	FAN WIDTH +-20 MM
VS60312V	1.2	VLSVB2	2.5	370	290	400
VS60312G	1.2	VGS2BP	2.5	560	400	400
VS60315	1.5	VKS2B	2.5	330	340	290
VS60318	1.8	VKS2B	2.5	290	290	340
VS60320	2.0	VRS2B	2.5	360	350	290
VS60325	2.5	VWS2B	2.5	360	440	280

MANUAL SPRAY GUN VS 503

CODE	FLUID NOZZLE Ø MM	AIR NOZZLE	PRESSURE BAR	AIR CONSUMPTION LT/MIN	FLUID OUTPUT ML/MIN	FAN WIDTH +-20 MM
VS50308	0.8	VES2P	2.5	270	150	190
VS50310	1.0	VES2P	2.5	270	200	220
VS50313	1.3	VES2P	2.5	220	200	210
VS50315	1.5	VHS2B	2.5	225	170	175
VS50318	1.8	VNS2B	2.5	110	210	170

SPRAY GUNS LOW PRESSURE



NOZZLE AND NEEDLE IN STAINLESS STEEL

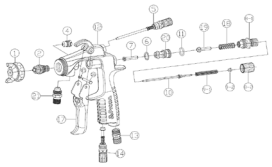

SPARE PARTS EXPLODED VIEW R715
Pag. 342

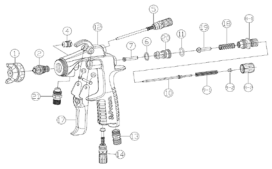

SPARE PARTS EXPLODED VIEW R775
Pag. 343

STANDARD SPARE PARTS:



NOZZLE KIT R715
Cod. 715R1XX



NOZZLE KIT R775
Cod. 775R1XX

MANUAL SPRAY GUN R775

CODE	FLUID NOZZLE Ø MM	PRESSURE BAR	AIR CONSUMPTION LT/MIN	FLUID OUTPUT ML/MIN	FAN WIDTH +-20 MM
R775012	1.2	3.5	430	480	380
R775015	1.5	3.5	290	250	260
R775020	2.0	3.5	360	370	290
R775025	2.5	3.5	460	440	300

MANUAL SPRAY GUN R715

CODE	FLUID NOZZLE Ø MM	PRESSURE BAR	AIR CONSUMPTION LT/MIN	FLUID OUTPUT ML/MIN	FAN WIDTH +-20 MM
R715008	0.8	3.0	240	200	190
R715010	1.0	3.5	75	95	100
R715013	1.3	3.5	195	140	155
R715015	1.5	3.5	230	170	170
R715018	1.8	3.5	250	220	180

SPRAY GUNS LOW PRESSURE





NOZZLE AND NEEDLE IN STAINLESS STEEL

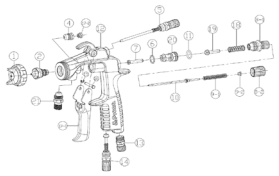

SPARE PARTS EXPLODED VIEW VS820
Pag. 345

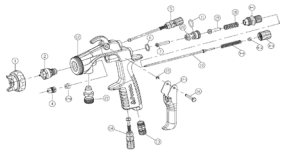

SPARE PARTS EXPLODED VIEW: VS810
Pag. 344

STANDARD SPARE PARTS



NOZZLE KIT VS810
Cod. 810R1XX



NOZZLE KIT VS820
Cod. 820R1XX

MANUAL SPRAY GUN VS820

CODE	FLUID NOZZLE Ø MM	PRESSURE BAR	AIR CONSUMPTION LT/MIN	FLUID OUTPUT ML/MIN	FAN WIDTH +-20 MM
VS82012	1.2	2.5-3.0	560	400	350
VS82015	1.5	2.5-3.0	330	270	340
VS82018	1.8	2.5-3.0	290	290	340
VS82020	2.0	2.5-3.0	360	410	320
VS82025	2.5	2.5-3.0	360	510	330

MANUAL SPRAY GUN VS810

CODE	FLUID NOZZLE Ø MM	PRESSURE BAR	AIR CONSUMPTION LT/MIN	FLUID OUTPUT ML/MIN	FAN WIDTH +-20 MM
VS81008	0.8	2.5-3.0	270	150	190
VS81010	1.0	2.5-3.0	145	95	200
VS81013	1.3	2.5-3.0	225	160	175
VS81015	1.5	2.5-3.0	145	200	180
VS81018	1.8	2.5-3.0	150	240	190

SPRAY GUNS LOW PRESSURE





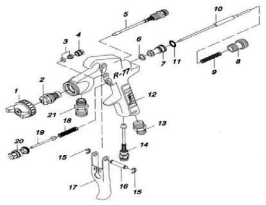

SPARE PARTS EXPLODED VIEW R77
Pag. 347

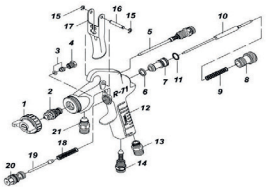

SPARE PARTS EXPLODED VIEW R71
Pag. 346

STANDARD SPARE PARTS



NOZZLE KIT R71
Cod. P7101XX
ø0.8/1.0
ø1.3/1.5/1.8



NOZZLE KIT R77
Cod. P7701XX
ø1.2/3.0/4.0
ø1.5/2.0/2.5

MANUAL SPRAY GUN R77

CODE	FLUID NOZZLE Ø MM	AIR NOZZLE	PRESSURE BAR	AIR CONSUMPTION LT/MIN	FLUID OUTPUT ML/MIN	FAN WIDTH +-20 MM
P770012	1.2	12	3.0-3.5	430	180	380
P770015	1.5	15	3.0-3.5	290	250	260
P770020	2.0	20	3.0-3.5	360	370	290
P770025	2.5	25	3.0-3.5	460	440	300
P770030	3.0	30	3.0-3.5	490	480	310
P770040	4.0	40	3.0-3.5	520	500	325

AEROGRAFO MANUALE R71

CODE	FLUID NOZZLE Ø MM	AIR NOZZLE	PRESSURE BAR	AIR CONSUMPTION LT/MIN	FLUID OUTPUT ML/MIN	FAN WIDTH +-20 MM
P710008	0.8	0	2.5-3.0	70	80	90
P710010	1.0	10	2.5-3.0	75	100	100
P710013	1.3	21	2.5-3.0	195	140	155
P710015	1.5	31	2.5-3.0	230	170	170
P710018	1.8	4	2.5-3.0	250	220	180

SPRAY GUNS LOW PRESSURE



MODEL Z

NOZZLE AND NEEDLE MADE OF TREATED NITRIDE

DESIGNED TO SPRAY AGGRESSIVE PRODUCTS SUCH AS CERAMICS, ANTI-CORROSION AND INORGANIC GALVANTS



MODEL INOX

STAINLESS STEEL NOZZLE AND NEEDLE
316 - 303
DESIGNED FOR ABRASIVE AND AGGRESSIVE PRODUCTS

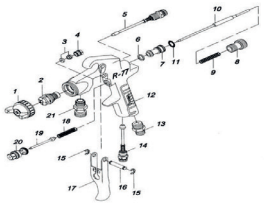

SPARE PARTS EXPLODED VIEW R77
Pag. 347

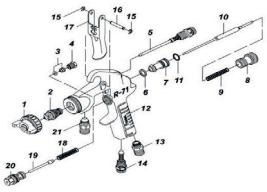

SPARE PARTS EXPLODED VIEW R71
Pag. 346

STANDARD SPARE PARTS:



NOZZLE KIT R77-Z
Cod. P7701XXZ



NOZZLE KIT R71II
Cod. P7101XXI
ø0.8/1.0
ø1.3/1.5/1.8

MANUAL SPRAY GUN R77 Z

CODE	FLUID NOZZLE Ø MM	PRESSURE BAR	AIR CONSUMPTION LT/MIN	FLUID OUTPUT ML/MIN	FAN WIDTH +-20 MM
P770020Z	2.0	3.5	293	370	280
P770025Z	2.5	3.5	300	660	380
P770030Z	3.0	3.5	329	699	440

MANUAL SPRAY GUNR71 STAINLESS STEEL

CODE	FLUID NOZZLE Ø MM	PRESSURE BAR	AIR CONSUMPTION LT/MIN	FLUID OUTPUT ML/MIN	FAN WIDTH +-20 MM
P7100008I	0.8	2.5-3.0	70	80	90
P7100010I	1.0	2.5-3.0	75	100	100
P7100013I	1.3	2.5-3.0	195	140	155
P7100015I	1.5	2.5-3.0	230	170	170
P7100018I	1.8	2.5-3.0	250	220	180

SPRAY GUNS FOR PUMPS LOW PRESSURE



STANDARD SPARE PARTS:



NOZZLE KIT AM6008
Cod. 608PL3XX
€ 80,00

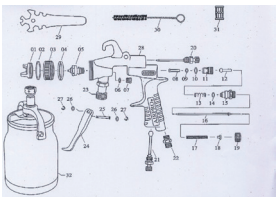

SPARE PARTS EXPLODED VIEW AM6008
Pag. 348

MANUAL SPRAY GUN AM6008 LVLP-P

CODE	FLUID NOZZLE Ø MM	AIR NOZZLE	PRESSURE BAR	AIR CONSUMPTION LT/MIN
608PL100	1.0	LVLP	2.0-3.0	198
608PL120	1.2	LVLP	2.0-3.0	198
608PL150	1.5	LVLP	2.0-3.0	198
608PL180	1.8	LVLP	2.0-3.0	198
608PL200	2.0	LVLP	2.0-3.0	198
608PL250	2.5	LVLP	2.5-3.0	198

SPRAY GUNS FOR PUMPS LOW PRESSURE





NOZZLE AND NEEDLE IN STAINLESS STEEL

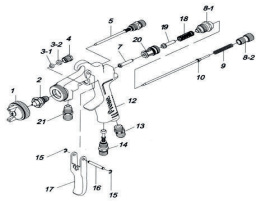

SPARE PARTS EPXLODED VIEW VS503
Pag. 341

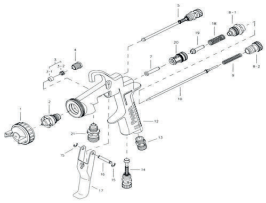

SPARE PARTS EXLODED VIEW S603
Pag. 340

STANDARD SPARE PARTS:



NOZZLE KIT VS503
Cod. VS5R1001XX



NOZZLE KIT VS603
Cod. VS6R2001XX

MANUAL SPRAY GUN R 603

ROUND SPRAY PATTERN

CODE	FLUID NOZZLE Ø MM	AIR NOZZLE	PRESSURE BAR	AIR CONSUMPTION LT/MIN	FLUID OUTPUT ML/MIN	ROUND PATTERN +-20 MM
RV603VS1	1.5	VKS2B	2.5	100	100	100
RV603VS2	1.8	VKS2B	2.5	120	110	90
RV603VS3	2.0	VRS2B	2.5	140	120	85
RV603VS4	2.5	VWS2B	2.5	145	135	85

MANUAL SPRAY GUN R 503

ROUND SPRAY PATTERN

CODE	FLUID NOZZLE Ø MM	AIR NOZZLE	PRESSURE BAR	AIR CONSUMPTION LT/MIN	FLUID OUTPUT ML/MIN	ROUND PATTERN +-20 MM
RV503VS1	0.5	VES2P	2.5	50	30	40
RV503VS2	0.8	VES2P	2.5	70	40	60
RV503VS3	1.0	VES2P	2.5	80	50	75
RV503VS4	1.3	VES2P	2.5	90	80	90
RV503VS5	1.5	VHS2B	2.5	100	100	105
RV503VS6	1.8	VNS2B	2.5	120	110	95

SPRAY GUNS FOR PUMPS LOW PRESSURE



Pump diffuser

Cod. 4300R142
€ 31,00

HIGH QUALITY SPRAY GUN DESIGNED FOR TOP COAT IN PLASTIC AUTOMOTIVE AND WOOD INDUSTRY

NOZZLE AND NEEDLE IN STAINLESS STEEL

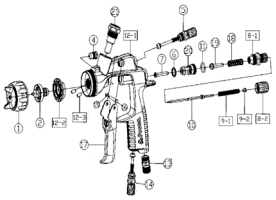

SPARE PARTS EXPLODED VIEW VS4300
Pag. 331

STANDARD SPARE PARTS:



SPARE PARTS EXPLODED VIEW VS4300
Cod. 4300R1XX

MANUAL SPRAY GUN VS4300-S

CODE	FLUID NOZZLE Ø MM	PRESSURE BAR	AIR CONSUMPTION LT/MIN	FLUID OUTPUT ML/MIN	FAN WIDTH +-20 MM
VS4003S08	0.8	2.0-2.5	360	360	295
VS4003S11	1.1	2.0-2.5	360	380	310
VS4003S13	1.3	2.0-2.5	360	410	330
VS4003S14	1.4	2.0-2.5	360	418	338
VS4003S15	1.5	2.0-2.5	360	430	350
VS4003S18	1.8	2.0-2.5	360	462	382
VS4003S20	2.0	2.0-2.5	360	480	390
VS4003S22	2.2	2.0-2.5	360	500	405



MANUAL SPRAY GUN MRS

CODE	FLUID NOZZLE Ø MM	PRESSURE BAR	AIR CONSUMPTION LT/MIN	SPRAY PATTERN TYPE
MRS-F03	0.3	2.0	35	range
MRS-F05	0.5	2.0	40	range
MRS-F08	0.8	2.0	45	range
MRS-R03	0.3	2.0	35	rose
MRS-R05	0.5	2.0	40	rose
MRS-R08	0.8	2.0	45	rose



SPRAY GUNS TWO COMPONENTS LOW PRESSURE





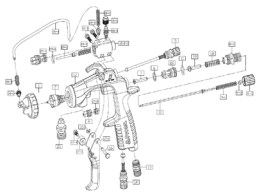

SPARE PARTS EXPLODED VIEW R2101H
Pag. 353

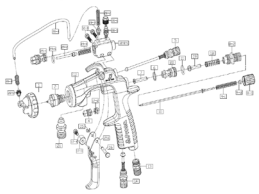

SPARE PARTS EXPLODED VIEW R2102H
Pag. 354

STANDARD SPARE PARTS:



NOZZLE KIT
R2101H
Cod. R1H1XX
€ 225,00



NOZZLE KIT
R2102H
Cod. R2H1XX
€ 245,00

MANUAL SPRAY GUN R210-1H

CODE	FLUID NOZZLE Ø MM	PRESSURE BAR	AIR CONSUMPTION LT/MIN	SIDE NOZZLE ØMM
R2101H10	1.0	2.5	333	0.8
R2101H15	1.5	2.5	333	0.8
R2101H20	2.0	2.5	333	0.8

MANUAL SPRAY GUN R210-2H

CODE	FLUID NOZZLE Ø MM	PRESSURE BAR	AIR CONSUMPTION LT/MIN	SIDE NOZZLE ØMM
R2102H15	1.5	2.5	333	0.8



MRS-R DOUBLE

CODE	FLUID NOZZLE Ø MM	PRESSURE BAR
MRS2K08	0.8	2.0
MRS2K10	1.0	2.0
MRS2K13	1.3	2.0

SPRAY GUNS TWO COMPONENTS LOW PRESSURE



TWO-COMPONENT LOW PRESSURE GLUE GUN

CODE	FLUID FITTING	SLEEVE	MAX PRESSURE
FB0345VSBP	1/4”	11/16”	20 Bar

VSPRO-BI 891

CODE	FLUID NOZZLE Ø MM	PRESSURE BAR
891W08	0.8	2.0
891W10	1.0	2.0
891W20	2.0	2.0



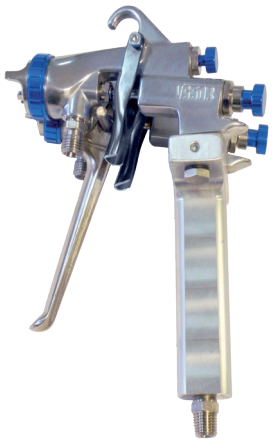



FB DOUBLE

CODE	FLUID NOZZLE Ø MM	PRESSURE BAR
FB2K08	0.8	2.0
FB2K10	1.0	2.0
FB2K13	1.3	2.0
FB2K15	1.5	2.0
FB2K18	1.8	2.0

MANUAL SPRAY GUNS - EXTENDED NOZZLE

DIFFERENT NOZZLE SIZES AVAILABLE ON REQUEST



FULL ROUND SPRAY PATTERN

503-L-P12

CODE	FLUID NOZZLE Ø MM	EXTENSION LENGTH
503-L-P121	1.2	150 MM
503-L-P122	1.2	300 MM
503-L-P123	1.2	450 MM
503-L-P124	1.2	500 MM
503-L-P125	1.2	600 MM
503-L-P126	1.2	800 MM
503-L-P127	1.2	1000 MM
503-L-P128	1.2	1500 MM

503-L-P13

CODE	FLUID NOZZLE Ø MM	EXTENSION LENGTH
503-L-P131	1.3	150 MM
503-L-P132	1.3	300 MM
503-L-P133	1.3	500 MM
503-L-P134	1.3	800 MM
503-L-P135	1.3	1000 MM
503-L-P136	1.3	1500 MM
503-L-P137	1.3	2000 MM



RADIAL ROUND SPRAY PATTERN

SPRAY PATTERN FAN 19°



R-12

CODE	FLUID NOZZLE Ø MM	EXTENSION LENGTH
R-1218	0.6	180 MM
R-1225	0.6	250 MM
R-1235	0.6	350 MM

VS503-PS

CODE	FLUID NOZZLE Ø MM	EXTENSION LENGTH
VS503-PS01	1.8	400 MM
VS503-PS02	1.8	500 MM



ADJUSTABLE CONE PATTERN



FLEXIBLE FAN PATTERN 180°

LR-PO8

CODE	FLUID NOZZLE Ø MM	EXTENSION LENGTH
LR-PO80501	1.3	500 MM
LR-PO805015	1.5	500 MM
LR-PO80801	1.3	800 MM
LR-PO80805	1.5	800 MM
LR-PO81001	1.3	1000 MM
LR-PO81005	1.5	1000 MM
LR-PO81501	1.3	1500 MM
LR-PO81505	1.5	1500 MM

SPRAY GUNS AUTOMATIC LOW PRESSURE



SPRAY GUN RA-C1

Code	Nozzle Ø mm	Pressure bar	Air consumption lt/min	Fluid output ml/min	Fan width mm
RAC105	0.5	3.0	60	60	200
RAC110	1.0	3.0	80	250	250
RAC113	1.3	3.0	100	350	350
RAC120	2.0	3.0	140	400	400

SPRAY GUN RA-C2

Code	Nozzle Ø mm	Pressure bar	Air consumption lt/min	Fluid output ml/min	Fan width mm
RAC205	0.5	3.0	60	60	200
RAC210	1.0	3.0	80	250	250
RAC213	1.3	3.0	100	350	350
RAC220	2.0	3.0	140	400	400

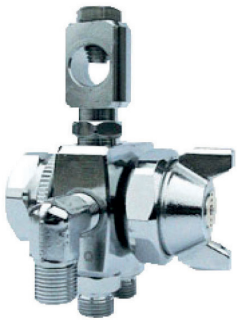



SPRAY GUN RA-C1R

Code	Fluid nozzle Ø mm	Pressure bar	Air consumption lt/min	Fluid output ml/min	Fan width mm
RAC1R05	0.5	3.0	50	50	50
RAC1R10	1.0	3.0	100	100	70
RAC1R13	1.3	3.0	140	140	80
RAC1R20	2.0	3.0	180	180	90

SPRAY GUN RA-C2R

Code	Fluid nozzle Ø mm	Pressure bar	Air consumption lt/min	Fluid output ml/min	Fan width mm
RAC2R05	0.5	3.0	60	50	50
RAC2R10	1.0	3.0	80	100	70
RAC2R13	1.3	3.0	100	140	80
RAC2R20	2.0	3.0	140	180	90





SPRAY GUN RA-C1/2S

Code	Fluid nozzle Ø mm	Pressure bar	Air consumption lt/min	Fluid output ml/min	Fan width mm
RAC1S05	0.5	3.0	60	40	18
RAC2S05	0.5	3.0	60	40	18

SPRAY GUN RA-C2L

Code	Fluid nozzle Ø mm	Pressure bar	Air consumption lt/min	Fluid output ml/min	Fan width mm
RAC2L13	1.3	3.0	170	50	100
RAC2L20	2.0	3.0	340	60	120



SPRAY GUNS AUTOMATIC LOW PRESSURE



SPRAY GUN RAR-1000

CODE	NOZZLE Ø MM	PRESSURE BAR	AIR CONSU. LT/MIN	FLUID OUTPUT ML/MIN	FAN WIDTH MM
RAR1000P07	0.7	2.0	280	180	180
RAR1000P11	1.1	2.0	280	200	230
RAR1000P14	1.4	2.0	280	220	260
RAR1000P17	1.7	2.0	280	250	290

SPRAY GUN RAR-2000

CODE	NOZZLE Ø MM	PRESSURE BAR	AIR CONSU. LT/MIN	FLUID OUTPUT ML/MIN	FAN WIDTH MM
RAR2000P07	Ø MM	2.0	280	180	180
RAR2000P11	1.1	2.0	280	200	230
RAR2000P14	1.4	2.0	280	220	260
RAR2000P17	1.7	2.0	280	250	290





SPRAY GUN RA 210

CODE	NOZZLE Ø MM	PRESSURE BAR	AIR CONSU. LT/MIN	FLUID OUTPUT ML/MIN	FAN WIDTH MM
RA210P08	0.8	2.5-3.0	480	400	360
RA210P10	1.0	2.5-3.0	500	450	380
RA210P012	1.2	2.5-3.0	530	500	400
RA210P15	1.5	2.5-3.0	330	270	340
RA210P18	1.8	2.5-3.0	330	330	340
RA210P20	2.0	2.5-3.0	360	400	320
RA210P25	2.5	2.5-3.0	360	500	330

SPRAY GUN RA 100

CODE	AIR NOZZLE	NOZZLE Ø MM	PRESSURE BAR	AIR CONSU. LT/MIN	FLUID OUTPUT ML/MIN	FAN WIDTH MM
RA10008	VES2B	0.8	2.5-3.0	270	150	190
RA1010P	VES2B	1.0	2.5-3.0	270	200	220
RA10010	VES1B	1.0	2.5-3.0	90	100	140
RA10013	VHS2B	1.3	2.5-3.0	260	250	230
RA10015	VHS2B	1.5	2.5-3.0	260	270	245
RA10018	VNS2B	1.8	2.5-3.0	190	310	230

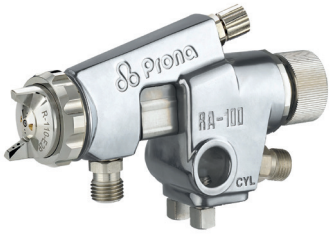

SPRAY GUNS AUTOMATIC LOW PRESSURE



PROTECTIVE CAP FOR RA 200
COD. RA200PC
Price:



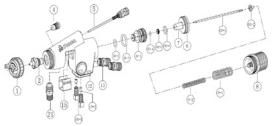

SPARE PARTS EXPLODED VIEW RA200
Pag. 361



PNEUMATIC FAN REGULATION
Cod. RAL00VTL
Price:

STANDARD SPARE PARTS:



NOZZLE KIT RA200
Cod. RA230XX
ø0.6/0.8/1.0
ø1.3/1.5/1.8/2.0



NOZZLE KIT RA200-Z
Cod. RA230XXZ

AUTOMATIC SPRAY GUN RA 200

CODE	AIR NOZZLE	NOZZLE Ø MM	PRESSURE BAR	AIR CONSUMPTION LT/MIN	FLUID OUTPUT ML/MIN	FAN WIDTH MM	PRICE
RA20006	VGS2BP	0.6	2.5-3.0	490	360	350	
RA20008	VGS2BP	0.8	2.5-3.0	510	400	360	
RA20010	VGS2BP	1.0	2.5-3.0	530	480	380	
RA20012	VLSVB2	1.2	2.5-3.0	450	480	380	
RA20015	VKS2B	1.5	2.5-3.0	330	270	340	
RA20018	VKS2B	1.8	2.5-3.0	330	330	340	
RA20020	VRS2B	2.0	2.5-3.0	360	400	320	
RA20025	VWS2B	2.5	2.5-3.0	360	500	330	

AUTOMATIC SPRAY GUN RA 200-Z

NOZZLE AND NEEDLE MADE OF HEAT TREATED NITRIDE

DESIGNED TO SPRAY ABRASIVE PRODUCTS SUCH AS CERAMICS, ANTI-CORROSION AND INORGANIC GALVANTS

CODE	AIR NOZZLE	NOZZLE Ø MM	PRESSURE BAR	AIR CONSUMPTION LT/MIN	FLUID OUTPUT ML/MIN	FAN WIDTH MM	PRICE
RA20012Z	VGS2BP	1.2	2.5-3.0	510	400	360	
RA20020Z	VRS2B	2.0	2.5-3.0	500	760	370	
RA20025Z	VWS2B	2.5	2.5-3.0	500	760	370	

SPRAY GUNS AUTOMATIC LOW PRESSURE



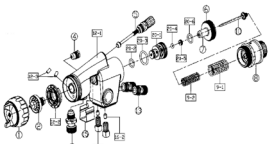

SPARE PARTS EXPLODED VIEW RA 4300
Pag. 362



PNEUMATIC FAN REGULATION
Cod. RAL43VTL
Price:

STANDARD SPARE PARTS:



NOZZLE KIT RA 4300
Cod. RA43KXX

AUTOMATIC SPRAY GUN RA 4300 MP

CODE	AIR NOZZLE	NOZZLE Ø MM	PRESSURE BAR	AIR CONSUMPTION LT/MIN	FLUID OUTPUT ML/MIN	FAN WIDTH MM	PRICE
RA430008	MP	0.8	2.0-2.5	360	360	280-400	
RA430010	MP	1.0	2.0-2.5	360	375	280-400	
RA430011	MP	1.1	2.0-2.5	360	385	280-400	
RA430012	MP	1.2	2.0-2.5	360	395	280-400	
RA430014	MP	1.4	2.0-2.5	360	410	280-400	
RA430015	MP	1.5	2.0-2.5	360	430	280-400	
RA430018	MP	1.8	2.0-2.5	360	465	280-400	
RA430020	MP	2.0	2.0-2.5	360	485	280-400	
RA430022	MP	2.2	2.0-2.5	360	500	280-400	

AUTOMATIC SPRAY GUN RA 4300 HVLP

CODE	AIR NOZZLE	NOZZLE Ø MM	PRESSURE BAR	AIR CONSUMPTION LT/MIN	FLUID OUTPUT ML/MIN	FAN WIDTH
RA400308H	HVLP	0.8	2.0	450	260	280-290
RA400310H	HVLP	1.0	2.0	450	270	280-290
RA400311H	HVLP	1.1	2.0	450	278	280-290
RA400312H	HVLP	1.2	2.0	450	285	280-290
RA400315H	HVLP	1.5	2.0	450	320	280-290

SPRAY GUNS AUTOMATIC LOW PRESSURE

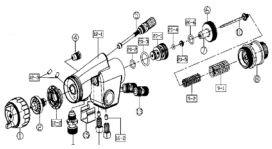

SPARE PARTS EXPLODED VIEW RA 4000
Pag. 363



High efficiency spray gun optimum adhesion rate and minimum product dispersion

Two atomization air inlets that provide a stable and sufficient air flow

Designed to be used at a lower pressureallowing the user to spray with gentle atomization

STANDARD SPARE PARTS



NOZZLE KIT RA4000
Cod. RA40KXX

AUTOMATIC SPRAY GUN RA 4000

CODE	AIR NOZZLE	NOZZLE Ø MM	PRESSURE BAR	AIR CONSUMPTION LT/MIN	FLUID OUTPUT ML/MIN	FAN WIDTH MM
RA400W10	MP	1.0	0.5 - 1.5	330 - 430	330	220 - 260
RA400W12	MP	1.2	0.5 - 1.5	330 - 430	340	220 - 260
RA400W14	MP	1.4	0.5 - 1.5	330 - 430	360	220 - 260

AUTOMATIC SPRAY GUNS



AUTOMATIC SPRAY GUN RAL 100

CODE	AIR NOZZLE	NOZZLE Ø MM	PRESSURE BAR	AIR CONSU. LT/MIN	FLUID OUTPUT ML/MIN	FAN WIDTH MM	PRICE
RAL1008	VES1B	0.8	2.0-3.0	430	140	200	**€ 470,00**
RAL1010	VES1B	1.0	2.0-3.0	430	150	200	**€ 470,00**
RAL1012	VGS2B	1.2	2.0-3.0	530	350	270	**€ 470,00**

AUTOMATIC SPRAY GUN RAL 200

CODE	AIR NOZZLE	NOZZLE Ø MM	PRESSURE BAR	AIR CONSU. LT/MIN	FLUID OUTPUT ML/MIN	FAN WIDTH MM	PRICE
RAL2008	VGS2B	0.8	2.0-3.0	430	140	200	**€ 525,00**
RAL2010	VGS2B	1.0	2.0-3.0	430	150	200	**€ 525,00**
RAL2012	VGS2B	1.2	2.0-3.0	530	350	270	**€ 525,00**







FUNCTIONALITY AND FEATURES

- Characterized by perfect atomization, high transfer efficiency, less air and paint consumption;
- The dipstick and nozzle are made of stainless steel;
- Suitable for spraying water-based materials and solvents;
- Body design is easy to disassemble, no adjustments are necessary after maintenance;
- The high performance spray gun is ideal for automotive, plastic, manufacturing, wood and ceramic industries etc...;

RAR-1000SW

CODE	AIR NOZZLE	NOZZLE Ø MM	PRESSURE BAR	AIR CONSU. LT/MIN	FLUID OUTPUT ML/MIN	FAN WIDTH MM
RAR1000SWP07	P	0.7	2.0-3.0	280 LT	180	180
RAR1000SWP11	P	1.1	2.0-3.0	280 LT	200	230
RAR1000SWP14	P	1.4	2.0-3.0	280 LT	220	260
RAR1000SWP17	P	1.7	2.0-3.0	280 LT	250	290

SPRAY GUNS AUTOMATIC LOW PRESSURE

AUTOMATIC SPRAY GUN RAR 101S



CODE	AIR NOZZLE	NOZZLE Ø MM	PRESSURE BAR	AIR CONSU. LT/MIN	FLUID OUTPUT ML/MIN	FAN WIDTH MM
RAR100108	VES2P	0.8	2.5-3.0	270	150	190
RAR100110E	VES2P	1.0	2.5-3.0	270	200	220
RAR1001113	VHS2B	1.3	2.5-3.0	260	250	230
RAR1001115	VHS2B	1.5	2.5-3.0	260	270	245
RAR1001118	VNS2B	1.8	2.5-3.0	190	310	240

AUTOMATIC SPRAY GUN RAR 200S

CODE	AIR NOZZLE	NOZZLE Ø MM	PRESSURE BAR	AIR CONSU. LT/MIN	FLUID OUTPUT ML/MIN	FAN WIDTH MM
RAR200SI08	VGS2B	1.2	2.5-3.0	530	500	400
RAR200SI15	VKS2B	1.5	2.5-3.0	330	270	340
RAR200SI18	VKS2B	1.8	2.5-3.0	330	330	340
RAR200SI20	VRS2B	2.0	2.5-3.0	360	400	320
RAR200SI25	VWS2B	2.5	2.5-3.0	360	500	330

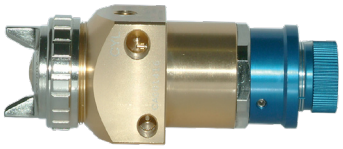

AUTOMATIC SPRAY GUN RA 60



CODE	AIR NOZZLE	NOZZLE Ø MM	PRESSURE BAR	AIR CONSU. LT/MIN	FLUID OUTPUT ML/MIN	FAN WIDTH MM
RA60008	VGS2P	0.8	2.0-3.0	300	180	220
RA6010P	VGS2P	1.0	2.0-3.0	310	190	230
RA60010	VES2P	1.0	2.0-3.0	270	150	190
RA60013	VHS2B	1.3	2.0-3.0	260	250	230
RA60015	VHS2B	1.5	2.0-3.0	260	270	245
RA60018	VNS2B	1.8	2.0-3.0	190	310	240

AUTOMATIC SPRAY GUN RA 80

CODE	AIR NOZZLE	NOZZLE Ø MM	PRESSURE BAR	AIR CONSU. LT/MIN	FLUID OUTPUT ML/MIN	FAN WIDTH MM
RA80012	VGS2P	1.2	2.0-3.0	530	500	400
RA80015	VKS2B	1.5	2.0-3.0	330	270	340
RA80018	VKS2B	1.8	2.0-3.0	330	330	340
RA80020	VRS2B	2.0	2.0-3.0	360	400	320
RA80025	VWS2B	2.5	2.0-3.0	360	500	330



EXTENDED SPRAY GUNS AUTOMATIC NOZZLE

DIFFERENT NOZZLE SIZES AVAILABLE ON REQUEST



FULL ROUND SPRAY PATTERN

SPRAY GUN RA503-L

CODE	NOZZLE Ø MM	EXTENSION LENGTH	AIR CONSUM. LT/MIN
RA503-L-P121	1.2	150 MM	150-200
RA503-L-P122	1.2	300 MM	150-200
RA503-L-P123	1.2	500 MM	150-200
RA503-L-P124	1.2	600 MM	150-200
RA503-L-P125	1.2	800 MM	150-200
RA503-L-P126	1.2	1000 MM	150-200
RA503-L-P127	1.2	1500 MM	150-200

SPRAY GUN LRA-PO8

CODE	NOZZLE Ø MM	EXTENSION LENGTH	AIR CONSUM. LT/MIN
LRA-PO80501	AVAILABLE MEASURES 0.8 -1.0 - 1.3 - 1.5	150 MM	270
LRA-PO805015		300 MM	270
LRA-PO80801		500 MM	270
LRA-PO80805		800 MM	270
LRA-PO81001		1000 MM	270
LRA-PO81501		1500 MM	270



FLEXIBLE FAN PATTERN 180°



SPRAY PATTERN FAN 45°

SPRAY GUN RA-12

CODE	NOZZLE Ø MM	EXTENSION LENGTH
RA-1218	0.6	180 MM
RA-1225	0.6	250 MM
RA-1235	0.6	350 MM

SPRAY GUN RA200-PX

CODE	NOZZLE Ø MM	EXTENSION LENGTH	AIR CONSUM. lt/min
RA20PX15	1.0	150 MM	140
RA20PX30	1.0	300 MM	140
RA20PX50	1.0	500 MM	140
RA20PX80	1.0	800 MM	140
RA20PX10	1.0	1000 MM	140
RA20PX25	1.0	1500 MM	140
RA20PX20	1.0	2000 MM	140



RADIAL ROUND SPRAY PATTERN



ADJUSTABLE CONE PATTERN

SPRAY GUN RA200-PS

CODE	NOZZLE Ø MM	LEXTENSION LENGTH	AIR CONSUM. LT/MIN
RA21PS18	0.8	150 MM	150-200
RA21PS25	0.8	300 MM	150-200
RA21PS30	0.8	500 MM	150-200
RA21PS40	0.8	800 MM	150-200
RA21PS50	0.8	1000 MM	150-200

AIRBRUSH



AIR BRUSH RH-CP

CODE	NOZZLE Ø MM	CUP CAPACITY	AIR CONSUMPTION LT/MIN	FLUID OUTPUT ML/MIN
RHCP	0.3	7 ml	14	12

AIR BRUSH RH-BS

CODE	NOZZLE Ø MM	CUP CAPACITY	AIR CONSUMPTION LT/MIN	FLUID OUTPUT ML/MIN
RHBS3	0.3	30 ml	14	12
RHBS5	0.5	30 ml	16	12

CODE	DESCRIPTION
RHBSW/2	Plastic cup 30 cc.





AIR BRUSH RH-BP

CODE	NOZZLE Ø MM	CUP CAPACITY	AIR CONSUMPTION lt/min	FLUID OUTPUT ML/MIN
RHBP	0.3	3 ml	11	12

AIR BRUSH RH-RDP

CODE	NOZZLE	CUP CAPACITY	AIR CONSUMPTION lt/min	FLUID OUTPUT ML/MIN
RHRDP	0.35	7/15 ml	15	12





COMPRESSOR ASC32

CODE	POWER	VOLTAGE	FLUID OUTPUT ML/MIN	SPEED
ASC1132	1/8 Hp	220/240 V	35	1450 Rpm

COMPRESSOR ASC12

CODE	POWER	VOLTAGE	FLUID OUTPUT ML/MIN	SPEED
ASC1112	1/8 Hp	220/240 V	23	1450 Rpm



DISPOSABLE CUPS



CORCUP

Disposable cup without the need of an external cup, complete with integrated product filter 125micron with standard inlet thread for Flexi cups.

CODE	CUP CAPACITY
235001	500 ml



CODE	DESCRIPTION
description	Adapter (check the list below)

ADAPTER MODEL	SPRAY GUN MODEL
913-B	AIRGUNSA AR3 -AZ3 - AZ30
913-B	IWATA Pininfarina W400
913-D	WALMEC Walcom Slim
913-M	SATA Jet 2000 - Jet 3000 - Jet 5000
913-E	SATA KLC - MCB - LM2000B - JET RP E DIGITAL - JET 2000 HVLP - NR 2000 DIGITAL - JET 90/S
913-E	VAL SPRAY VS703 - VS830 - VS4300 STAR SMV4000
913-E	WALMEC HTE GENESIS

ADAPTER MODEL	SPRAY GUN MODEL
913-A	AM5008 - VS 827 STAR S4000 VECCHIA
913-A	IWATA W400 - WR400 - LPA94 - VXL949 - LPH400
913-A	SATA NR92 HVLP - JET BGR - GET GR92B - JET B - GET B NR95 HVLP GET B NR92
913-D	WALMEC FX GEO - FX HVLP
913-D	ASTURO 9011 HVLP - 1011
913-C	DEVILBLISS Gti - GTi Pro - PRI - GFP - GFVGFHV-510

SPS CUP

Disposable cup of 650 cc
Graduated external cup and internal lid with 125 micron filter

CODE	REF.	DESCRIPTION
VSPR-03	1+2	External cup + ring nut + cap
VSPR-02	3	Disposable inner cup
VSPR-01	4	Adapter M 16x1.5 per VS 703 - VS 830 - VS 4300
VSPR-01W	5	Adapter F 16x1.5 for AM 5008 - VS 827

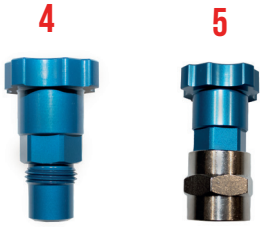



DISPOSABLE CUPS

1-2 3



SPS CUP

Disposable cup of 650 cc
Graduated external cup and internal lid with 125 micron filter

CODE	RIF.	DESCRIPTION
VSPR-012	1+2	External cup + ring nut + cap 180ml
VSPR-014	1+2	External cup + ring nut + cap 400ml
VSPR-016	1+2	External cup + ring nut + cap 650ml
VSPR-032	3	Disposable inner cup + cap 180ml
VSPR-034	3	Disposable inner cup + cap 400ml
VSPR-036	3	Disposable inner cup + cap 650ml

CUPS FOR SPRAY GUNS



CUP RC-6MRB

WITH INTEGRATED AGITATOR

CODE	CUP CAPACITY	FLUID INLET
RC6RCMB	600 cc	M 16x1.5

SUITABLE FOR MODELS:
VS 830 - VS 4300
VS 703

CUP RC-6R

SUITABLE FOR MODELS:
AM5008 - W400
H827

CODE	CUP CAPACITY	FLUID INLET
RARC6R	600 cc	F 16x1.5

CODE	DESCRIPTION
RC6RMP001	Anti-drip lid





CUP RC-6M

CODE	CUP CAPACITY	FLUID INLET
RC6RM	600 cc	M 16x1.5

CODE	DESCRIPTION
RC6RMP001	Anti-drip lid

SUITABLE FOR MODELS:
VS 830 - VS 4300
VS 703

CUP PRESSURE

SUITABLE FOR MODELS PRESSURE:
VS 830 - VS 4300 - VS 703
AM5008 - W400 IWATA - H827

CODE	CUP CAPACITY	FLUID INLET
RC6RMP	600 cc	luid inlet
RARC6RP	600 cc	F 16x1.5





CUP RC-1

CODE	CUP CAPACITY	FLUID INLET
RC114	1000 cc	1/4”
RC138	1000 cc	3/8”

CUP RC-2

CODE	CUP CAPACITY	FLUID INLET
RC214	600 cc	F 1/4”

CUP RCL-10B

AUTOCLAVE LOCK

CODE	CUP CAPACITY	FLUID INLET
RCL10B	1000 cc	3/8”

CUP RCL-7B

AUTOCLAVE LOCK

CODE	CUP CAPACITY	FLUID INLET
RCL7B	600 cc	F 1/4”

CODE	DESCRIPTION
10B150	Dropless cover



CUPS FOR SPRAY GUNS



CUP RC-P Stainless steel

Code	Cup capacity	Fluid inlet
RC6MIT	600 cc	M 16x1.5
RC10MIT	1000 cc	M 16x1.5

Suitable for models PRESSURE :
VS 830 - VS 4300
VS 703

Suitable for models:
VS 830 - VS 4300
VS 703

CUP RC-A Stainless steel

Code	Cup capacity	Fluid inlet
RC6AIT	600 cc	M 16x1.5
RC10AIT	1000 cc	M 16x1.5





CUP RC-4 Aluminium

Code	Cup capacity	Fluid inlet
RC-4SR00	400 cc	1/4”
RC-4R00	400 cc	3/8”



CUP RC-4 Nylon

Code	Cup capacity	Fluid inlet
RC4S14	400 cc	1/4”
RC438	400 cc	3/8”

CUP RC-51M

Code	Cup capacity	Fluid inlet
RC-51M00	150 cc	M 8x1.0



CUP RC-51SR

Code	Cup capacity	Fluid inlet
RC-51SR00	150 cc	1/4”





CUP RC-17R

Code	Cup capacity	Fluid inlet
RC-17R00	400 cc	1/4”



CUP AGITATOR RC-MB

Code
RCMBA



AIR FLOW REGULATOR

Code	Ø hose	Fluid inlet
RG00PRE	2x4	4xm5
RG01PRE	4x6	1/8”



PU HOSE FOR PRESSURE CUPS 1MT

Code	Dimensions
35024PU	2x4
35046PU	4x6

ACCESSORIES FOR SPRAY GUNS



CODE	MESH	DESCRIPTION	H	ØE
23003	30	Superior cup filter in nylon VS827	35MM	10MM
23003G	60	Superior cup filter in nylon VS703 - VS830	40MM	11MM
23003i	60	Superior cup filter with net in stainless steel	40MM	12MM

CODE	MESH	DESCRIPTION	H	ØE
23001	130	Universal filter in nylon	42MM	29MM
23007	100	Universal filter in stainless steel	42MM	29MM
23001M	80	Nylon mini inferior cup filter	37MM	19MM





23113 23001BI

CODE	MESH	DESCRIPTION	H	ØE
23113	80	Universal filter in nylon	85MM	19MM
23114	60	Universal filter in stainless steel	85MM	19MM
23001BI	120	Two-stage universal filter in nylon	70MM	15MM
23009	80	Inferior cup filter flat bottom with net in s.steel	41MM	25MM

CODE	DESCRIPTION
SH813W	Spray gun cleaning set 17 pcs
SH81500	Single brush



AR060



AR050



AR060



CODE	DESCRIPTION	THREAD
AR060	Air reguator with pressure gauge	FM 1/4”
AR050	Air regulator with knob	FM 1/4”
RP001G	Air regulator with pressure gauge 0-7 bar complete with second inlet	FM 1/4”

CODE	DESCRIPTION
SL5000	Cup 210µ stainer for cups 600cc (pkg of 5pcs)
SL5000E	Cup 210µ stainer for cups 600cc (pkg of 5pcs) with rubber band
C36000	Densimeter with brass hole DIN 4





CODE	DESCRIPTION	LENGHT
VSC01	Round cleaning brush	15CM
VSC02	Round cleaning brush	28CM
VSC03	Round cleaning brush	37CM

FILTERING AND PAINT PREPARATION

CODE	DESCRIPTION
C38700	Nylon Jug 1 lt
C39700	Nylon Jug 2 lt
C38600	Nylon Jug 3 lt
C39400	Nylon Jug 5 lt

CODE	MESH	DESCRIPTION
23576	576	Nylon sieve for cups
23011	1.100	Nylon sieve for cups
23002	2.000	Nylon sieve for cups
23005	5.000	Nylon sieve for cups
23100	10.000	Nylon sieve for cups





CODE	MICRON	DESCRIPTION	ØE
24125	125	Paper strainer 180gsm	16MM
24190	190	Paper strainer 180gsm	16MM
24224	224	Paper strainer 180gsm	16MM



CODE	DESCRIPTION
39T020	Plastic cup 200ml
39T050	Graded plastic cup with lid 500ml
39T100	Graded plastic cup with lid 1000ml
39T250	Graded plastic cup with lid 2500ml
39C050	Plastic cover for cup 500ml
39C100	Plastic cover for cup 1000ml
39C250	Plastic cover for cup 2500ml

CODE	DESCRIPTION	COME FROM
238020	Plastic mixer	20 LT
238025	Plastic mixer	2,5 LT
238010	Plastic mixer	1 LT
238045	Can opener	





CODE	DESCRIPTION
35T20	White plastic container 200 ml
35T21	Cover for plastic container 200 ml
35T50	White plastic container 500 ml
35T51	Cover for plastic container 500 ml
35T10	White plastic container 1000 ml
35T11	Cover for plastic container 1000 ml

THICKNESS GAUGE AND SPECTROCOLORMETER

ECONOMICAL NL COATING THICKNESS GAUGE

MEASURING RANGE 0 - 1,250 UM



CODE	DESCRIPTION
2201213352	NL FN series feeler gauge red, ferrous/non-ferrous substrate integrated probe
2201213362	nls fn series feeler gauge red, ferrous/non-ferrous substrate cable probe
2201213372	NL4500 FN series feeler gauge blue, ferrous/non-ferrous substrate integrated probe

DIGITAL THICKNESS GAUGE P6000

MEASURING RANGE 0 - 1.500 um



CODE	DESCRIPTION
220121335	Thickness gauge for ferrous substrates with integrated probe
220121336	Thickness gauge for ferrous substrates with cable probe
220121337	Thickness gauge for non ferrous substrates with integrated probe
220121338	Thickness gauge por non ferrous substrates with cable probe
220121339	Thickness gauge for ferrous and non-ferrous substrates with integrated probe
220121340	Thickness gauge for ferrous and non ferrous substrates with cable probe

CODE	DESCRIPTION
220120487	Manual thickness gauge in aluminum ARW 1150 Measuring range 25 - 2000 Lgm Conforms to ASTM D4414, BS3900, ISO2808



PORTABLE SPECTROPHOTOMETER



CODE	DESCRIPTION
22203010	Sphere portable spectrocolorimeter, with 8mm aperture area with display

WORKSHOP ACCESSORIES



Code	Description
FBVB0028	Neutral gun holder up to 10 kg capacity four pistols with accessories



code	Description
60130	Magnetic gun holder for wall for airbrushes with gravity tank. Suitable also for wall mounting using the special screws supplied.



code	Description
VSC930	Milk can holder both in metal and plastic with contents up to 30 kg. Equipped with suction tube for complete emptying of the can



CODICE	DESCRIZIONE
VSA22	Retractable air hose reel with automatic leveling system 20m Ø3/8''

AIR REGULATOR AND LUBRICATOR



CODE	DESCRIPTION
CARE14	Air reducer MR08 0-8 bar FF 1/4” + F 1/8”
REA1406	Air regulator 0-8 bar FF alluminium 1/4 + F 1/8"
CAKR14	Air regulator kit with base and pressure gauges 0-6 bar
CARE15	Single regulator with plug connection for base
CABR14	Base for regulators
CAKR16	Air regulator kit with base (Manometers excluded)

CODE	DESCRIPTION
AFR8014	Air regulator filter FF 1/4”
AFR8038	Air regulator filter FF 3/8”
AFR8012	Air regulator filter FF 1/2”
AFR8034	Air regulator filter FF 3/4”





CODE	DESCRIPTION
AFRL8014	Filter Regulator Lubricator system F 1/4”
AFRL8038	Filter Regulator Lubricator system F 3/8”
AFRL8012	Filter Regulator Lubricator system F 1/2”

CODE	DESCRIPTION
AF8014	Air regulator filter and lubricator F 1/4”
AF8038	Air regulator filter and lubricator F 3/8”
AF8012	Air separator filter FF 1/2"





CODE	DESCRIPTION
AL8014	Air lubricator filter FF 1/4”
AL8038	Air lubricator filter FF 3/8”
AL8012	Air lubricator filter FF 1/2”

CODE	DESCRIPTION
AR50001	Air regulator filter 1” 5000 lt/min
AF50001	Air separator filter F 1” 5000 lt/min







CODE	DESCRIPTION
MF80	Air filter for spray guns and small tools F 1/4”

PAINTING MASK



CODICE	DESCRIZIONE
600V003	Filtering mask FFP2 NR D with valve

CODE	DESCRIPTION
305000	Filtering mask 987 (filters not included)
306000	Filter for mask 987 type A1B1P2





CODE	DESCRIPTION
102900	Filtering mask Duetta (filters not included)
113740	Cartridge A1B1P1 for Duetta mask
109190	Prefilters for Duetta mask (Pack of 50 pcs)

CODE	DESCRIPTION
112240	TR 82 mask with complete anti-scratch and anti-solvent screen (filter not included)
123540	Filter A2B2P3
118010	Corrugated hose TUR 801
118280	Visor film (pack of 10 pcs)
903110	Visor in glass





CODE	DESCRIPTION
4038000VS	Hard helmet for painting VS Blast
4038001VS	Visor film (pack of 100 pcs)
4038002VS	Acetate visor
4038003VS	Collar
4038004VS	Neck protection hood (optional)
4038005VS	Silencer and fluid regulation kit

CODE	DESCRIPTION
1308200	Respirator with mask TR 2002 with anti-solvent screen complete with battery-powered turbine (filters excluded)
1308400	Respirator with TR82 mask with glass screen complete withbattery-powered turbine (filters excluded)
123540	Filter A2B2P3
1366200	Turbine battery charger
1431100	Turbine battery pack



PAINTING MASK



CODE	DESCRIPTION
AC190TR82VS	AC 190 TR82 mask set with flow regulator + filter

CODE	DESCRIPTION
AC190FUVS	Set AC 190 FU semi-soft mask with visor + flow regulator + filter





CODE	DESCRIPTION
AC190HVS	AC 190 H mask set with hood and flow regulator + filter

TOOLS AND AIR GUNS FOR WORKSHOP



CODE	DESCRIPTION
ADG101	Aluminum blow gun

CODE	DESCRIPTION
ABGB042	Plastic blow gun with 4” extension
ABGB102	Plastic blow gun with 10” extension





CODE	DESCRIPTION
APGB200	Aluminum inflating gun with pressure gauge
AUG188	Aluminum washing gun with 10 ”spout

CODE	DESCRIPTION
ASBG116	Manual sandblasting gun kit with internal nozzle in 2.5 mm brass, 6 mm tempered steel external nozzle and 16 × 22 mm mesh suction tube.





CODE	DESCRIPTION
A95300	Manual gun R2 for paint drying

CODE	DESCRIPTION
POL1001028	Polyurethane gun
SIL0028PT	Silicone gun





CODE	DESCRIPTION
A5024	Manual gun for soundproofing

CODE	DESCRIPTION
AS626	Manual anti-noise application spray gun



PAINT CAN HOLDER AND NEBULIZER

CODE	DESCRIPTION
3057024	Nebulizer in painted steel 24 L wheeled with funnel to facilitate filling, safety cap with vent for residual pressure, extensible tube and lance with shockproof and acid-resistant material nozzle
3057026	Nebulizer in stainless steel 24 L wheeled with funnel to facilitate filling, safety cap with vent for residual pressure, extensible tube and lance with shockproof and acid-resistant material nozzle



CODE	DESCRIPTION
15006021	PVC lance with fan nozzle Ø 1.1mm



DISPLAYS

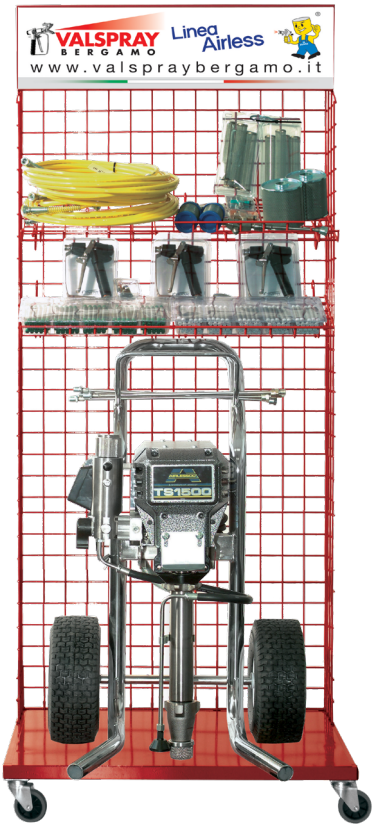

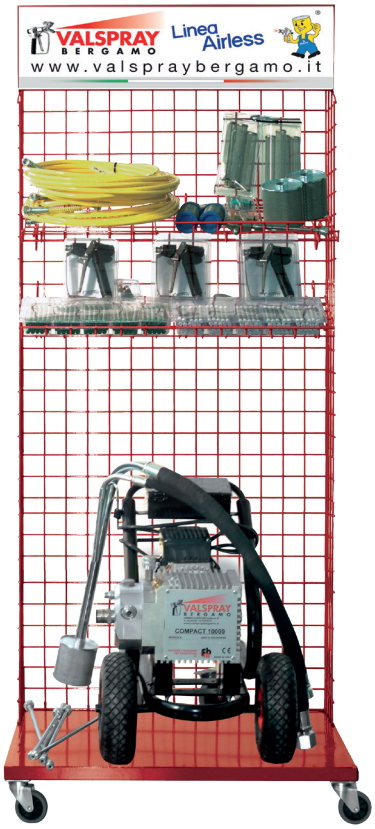



CODE	DESCRIPTION
EXSP-0023863	NEUTRAL DISPLAY DIMENSION 200X80 CM

LED DRYING LAMPS



CODE	DESCRIPTION
841050	LED lamp 1050W for drying 50 / 60 Hz 220 / 240V with base support 50x55 adjustable height from 0 to 168 cm and 360 ° rotating head for drying 40x60cm areas

CODE	DESCRIPTION
842100	LED lamp 2100 W for drying 50 / 60Hz 220 / 240V with base support 50x55 adjustable height from 0 to 182 cm and double 360 ° rotating head for drying 60x80cm areas







CODE	DESCRIPTION
844150	LED lamp 3150 W for drying 50/60 Hz 220 / 240V with base support 82x111 cm adjustable height from 165 to 230cm and four 360 ° rotating heads for drying 100x120cm areas

ORBITAL SANDERS



CODE	DESCRIPTION
RP-5155A	Pneumatic orbital sander 125mm with 5mm orbit and speed of 10.000 rpm without self-vacuum

CODE	DESCRIPTION
RP-5155CA	Pneumatic orbital sander 125mm with 5mm orbit and speed of 10.000 rpm



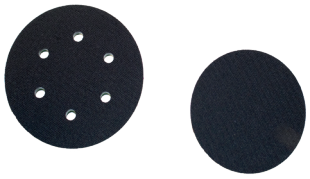

CODE	DESCRIPTION
RP-51R125	Pad 125 mm without holes
RP-51R150	Plate 150 mm 6 holes

ABRASIVE PAPERS



DIAMETER FROM 150Ø/125Ø

CODE	HOLES	DESCRIPTION
9006060	6	Self-gripping discs of abrasive paper with corundum grain 60
9006080	6	Self-gripping discs of abrasive paper with corundum grain 80
9006120	6	Self-gripping discs of abrasive paper with corundum grain 120
9006150	6	Self-gripping discs of abrasive paper with corundum grain 150
9006180	6	Self-gripping discs of abrasive paper with corundum grain 180
9006240	6	Self-gripping discs of abrasive paper with corundum grain 240
9081060	8 + 1	Self-gripping discs of abrasive paper with corundum grain 60
9081080	8 + 1	Self-gripping discs of abrasive paper with corundum grain 80
9081120	8 + 1	Self-gripping discs of abrasive paper with corundum grain 120
9081150	8 + 1	Self-gripping discs of abrasive paper with corundum grain 150
9081180	8 + 1	Self-gripping discs of abrasive paper with corundum grain 180
9081220	8 + 1	Self-gripping discs of abrasive paper with corundum grain 220
9081320	8 + 1	Self-gripping discs of abrasive paper with corundum grain 320
9081400	8 + 1	Self-gripping discs of abrasive paper with corundum grain 400
9081500	8 + 1	Self-gripping discs of abrasive paper with corundum grain 500

PAINT BOOTH FILTERS



Sky filter V500MR

CODE	HEIGHT	LENGHT
HFR500	1 MT	20 MT
HFR50015	1,5 MT	20 MT
HFR50020	2 MT	20 MT

Prefilter HFB200

CODE	HEIGHT	LENGHT
HFB2001	1 MT	20 MT
HFB20015	1,5 MT	20 MT
HFB20020	2 MT	20 MT





Prefilter HF150

CODE	HEIGHT	LENGHT
HF1501	1 MT	20 MT
HF15015	1,5 MT	20 MT
HF15020	2 MT	20 MT

UPON REQUEST WE SUPPLY FRAME CELL FILTERS, POCKET FILTERS AND NAY OTHER FILTERING MEDIA FOR SPRAY PAINTING BOOTHS

PAINT BOOTH FILTERS



Multilayer kraft filter with fiber glass filter

CODE	HEIGHT	LENGHT
SC13AE	1.14 MT	9.5 MT

8 layer kraft filter

CODE	HEIGHT	LENGHT
SC13GC	1.14 MT	9.5 MT





Paint stop filter in fiber glass 200g/m

CODE	HEIGHT	LENGHT	TOTAL M2 PER ROLL
HFG2205	50 CM	20 MT	10
HFG2206	60 CM	20 MT	12
HFG2207	75 CM	20 MT	15
HFG22010	100 CM	20 MT	20
HFG22015	150 CM	20 MT	30
HFG22020	200 CM	20 MT	40

UPON REQUEST WE SUPPLY FRAME CELL FILTERS, POCKET FILTERS AND NAY OTHER FILTERING MEDIA FOR SPRAY PAINTING BOOTHS

PAINT BOOTH FILTERS



Filter cell with cardboard frame

LONG GLASS FIBER FILTER MEDIA

Code	Efficiency	height	lenght	Thickness
AC11	G3	500 mm	500 mm	48 mm
AC105N	G3	500 mm	860 mm	48 mm
AC101N	G3	592 mm	592 mm	48 mm

Filter cell with cardboard frame

LONG GLASS FIBER FILTER MEDIA AND PRE-FILTER

Code	Efficiency	height	lenght	Thickness
AC12	G4	500 mm	500 mm	48 mm
AC37	G4	500 mm	660 mm	48 mm
AC102N	G4	592 mm	592 mm	48 mm





Filter cell with metal frame

PROGRESSIVE FILTER MEDIA IN POLYESTER

Code	Efficiency	height	lenght	Thickness
VZ285948	G4	280 mm	592 mm	48 mm
VZ505048	G4	500 mm	500 mm	48 mm
VZ595948	G4	592 mm	592 mm	48 mm

ON REQUEST WE SUPPLY CELLS, POCKETS AND MEDIUM FILTERS FOR PAINTING PLANTS

PAINT BOOTH FILTERS



Overspray collection filters

CODE	HEIGHT	LENGHT	DEPTH
CUB300	487 MM	487 MM	297 MM
CUB500	487 MM	487 MM	497 MM

Drop divider panel

AVAILABLE ON REQUEST IN VARIOUS SIZES AND TYPES OF PASSAGE

CODE	FILTRATION TYPE
SG200	Passage profile with 2 changes of direction
SG400	Passage profile with 4 changes of direction
SG210	Passage profile with 2 changes of direction
SG410	Passage profile with 4 changes of direction

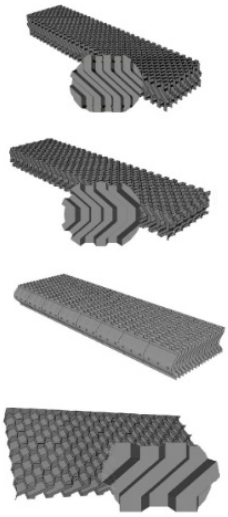

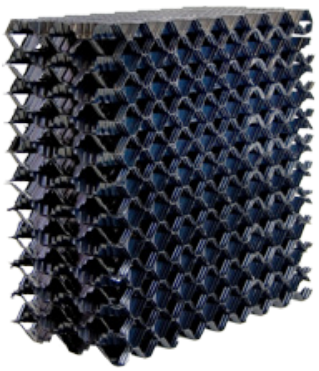



Soft pocket filters

SYNTHETIC FILTER MEDIA

CODE	EFFICIENCY	HEIGHT	LENGHT	DEPTH
TS6/8/5538	M6	592 MM	592 MM	380 MM
TS6/8/5550	M6	592 MM	592 MM	500 MM
TS4/6/5536	G4	592 MM	592 MM	360 MM
TS4/6/5550	G4	592 MM	592 MM	500 MM

ON REQUEST WE SUPPLY CELLS, POCKETS AND FILTER MEDIA FOR ANY PAINTING SYSTEMS

PAINT BOOTH FILTERS





Cardboard filter AF923 Andreae High Efficency with fiber glass

CODE	HEIGHT	LENGHT
CAAF923	90 CM	9.24 MT
CAAF123	100 CM	8 MT

SUITABLE FOR WATER BASE PRODUCTS WITH HIGH PERFORMANCE

Cardboard filter AF813 Andreae The Original

CODE	HEIGHT	LENGHT
CAAF813	90 CM	9.24 MT
CAAF113	100 CM	10 MT
SPECIAL PRICE FOR COMPLETE PALLET 60PZ		

SUITABLE FOR WATER BASE PRODUCTS









Cardboard filter AF803 Andreae Starter

CODE	HEIGHT	LENGHT
AF803	90 CM	9.24 MT
CAAF103	100 CM	10 MT
SPECIAL PRICE FOR PALETT 60PZ 803		

ONLY FOR SOLVENT BASE PRODUCTS

DRYING TROLLEY AND CART

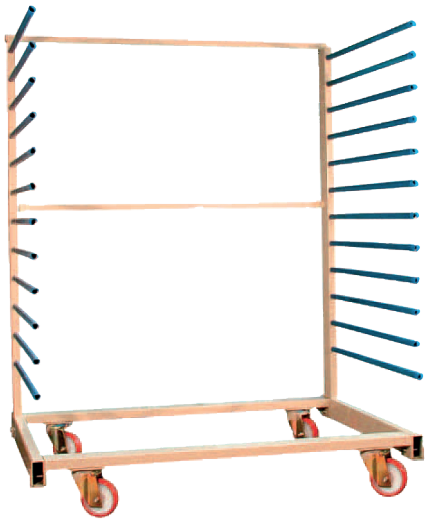

FEATURES

- Maximum distance between the uprights mm. 1500
- Arms length mm. 780
- Useful gap between the arms mm. 120
- Total trolley height mm. 1900
- 11 shelves
- 4 swivel wheels ø mm. 160 in rubber
- Arms covered with plastic U profile
- Capacity Kg. 300, weight each mast 15 kg

Fixed trolley C/4

CODE	HEIGHT	LENGHT
000CBC/4	201 CM	1140 CM

FEATURES:

- Minimum distance between the uprights mm. 260
- Maximum distance between the uprights mm. 1350
- Arms length per part mm. 780
- Useful gap between the arms mm. 120
- Total trolley height mm. 1900
- 22 shelves
- 4 swivel wheels ø mm. 160 in rubber
- Arms covered with plastic U profile
- Capacity Kg. 300

Cross trolley C / 6-1X

CODE	HEIGHT	LENGHT
000CBC/6-1X	188 CM	144 CM

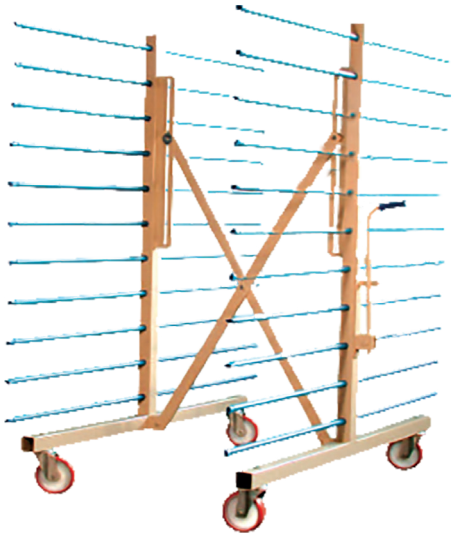



FEATURES:

- Minimum distance between the uprights mm. 260
- Maximum distance between the uprights mm. 1350
- Arms length per part mm. 780
- Useful gap between the arms mm. 120
- Total trolley height mm. 1900
- 11 shelves
- 4 swivel wheels ø mm. 160 in rubber
- Arms covered with plastic U profile
- Capacity kg 200

Adjustable trolley C/10

CODE	HEIGHT	LENGHT
000CBC/10	188 CM	160 CM

FEATURES:

- Shelf mm 500x1000
- Capacity KG 60
- Weight KG 10

Adjustable cart C/91

CODE	HEIGHT	LENGHT
000CBC/91	110 CM	50X100 CM



AUTOMATIC AIRLESS SPRAY GUNS

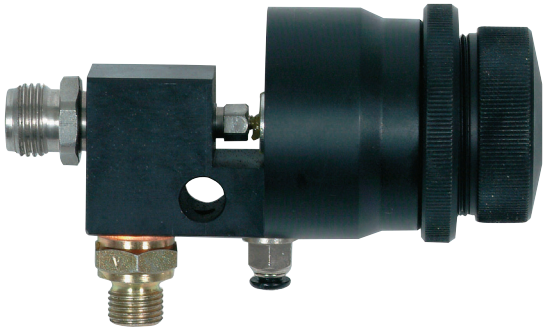

AUTOMATIC AIRLESS GUN VSA 81

CODE	FLUID INLET	HEAD	MAX PRESSURE
108100	inlet	11/16”	250 Bar

CODE	DESCRIPTION
VS00500A	Repair kit spray gun VSA 81

AUTOMATIC AIRLESS GUN VSA 81 STAINLESS STEEL

CODE	FLUID INLET	HEAD	MAX PRESSURE
108200	1/4”	11/16”	250 Bar
VSA81/2108100	1/4” + 1/4”	11/16”	250 Bar

CODE	DESCRIPTION
VS00500A	Repair kit spray gun VSA 81 INOX

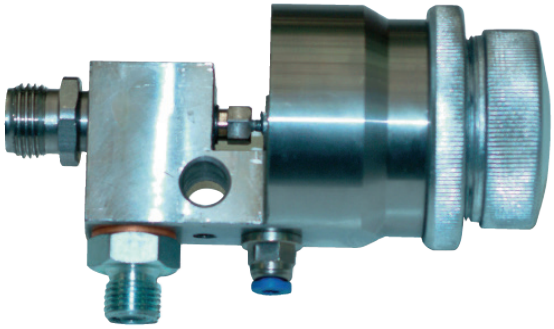



AUTOMATIC AIRLESS GUN HG 74S

CODE	FLUID INLET	HEAD	MAX PRESSURE
HG74S0	1/4”	7/8” and red.included 11/16”	250 Bar

CODE	DESCRIPTION
HRG740	Repair kit spray gun HG 74S

STANDARD ACCESSORIES:

CODE	DESCRIPTION
510012	Standard tip support retainer F 7/8”
109010	Standard tip support retainer 11/16”
109009	Stainless steel standard tip support retainer F 11/16”
AR8555051	Reversible tip guard F 11/16”
100030	ST gasket 11/16” ø15
100040	ST gasket ST 7/8” ø 20



AUTOMATIC AIRLESS SPRAY GUNS

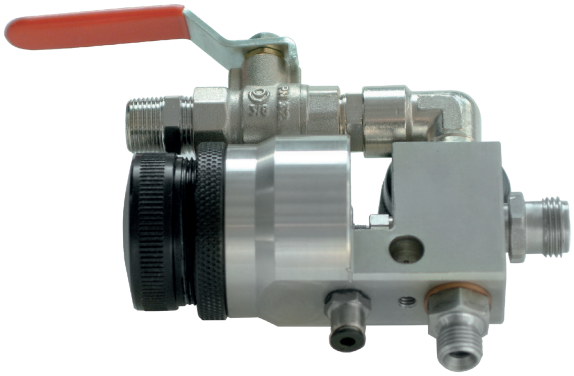

AUTOMATIC AIRLESS GUN FOR ABRASIVE PASTE VSA 81 SPECIAL

CODE	FLUID INLET	HEAD	MAX PRESSURE
VSA81001IS	1/4”	11/16”	250 Bar

CODE	DESCRIPTION
VS00500AT	Repair kit spray gun VSA 81 SPECIAL

AUTOMATIC AIRLESS GUN FOR SILICONE VSA 812A



CODE	FLUID INLET	HEAD	MAX PRESSURE
VS81002A	1/4”	11/16”	250 Bar

CODE	DESCRIPTION
VS00500S	Repair kit spray gun VSA 81 silicones

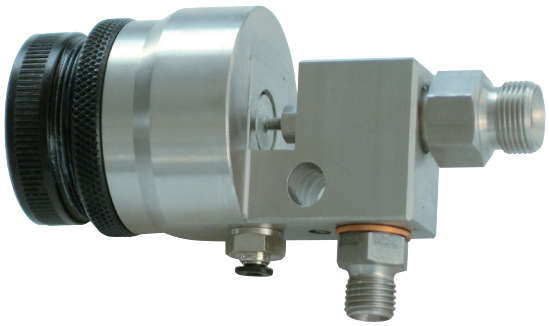

AUTOMATIC AIRLESS GUN FOR CATALYST INJECTION VSHA

CODE	FLUID INLET	HEAD	MAX PRESSURE
VS81005I (inox)	1/4”	3/8”	250 Bar
VSHAAINIZ	1/4”	3/8”	250 Bar

CODE	DESCRIPTION
VS00500AZ	Repair kit spray gun VSHA

STANDARD ACCESSORIES:

CODE	DESCRIPTION
510012	Standard tip support retainer F 7/8”
109010	Standard tip support retainer 11/16”
109009	Stainless steel standard tip support retainer F 11/16”
AR8555051	Reversible tip guard F 11/16”
100030	ST gasket 11/16” ø15
100040	ST gasket ST 7/8” ø 20



MANUAL AIRLESS SPRAY GUN



MANUAL AIRLESS GUN VS 500

CODE	FLUID INLET	HEAD	MAX PRESSURE	
VS80500	1/4"	11/16”	500 Bar	
VS90500	16X1.5	11/16”		
VS805007/8	1/4”	7/8”		
VS905007/8	16X1.5	7/8”		

CODE	DESCRIPTION
VS00500	Repair kit spray gun VS 500

EXPLODED VIEW PAGE 372

MANUAL AIRLESS GUN VS 500-5
WITH PRODUCT PASSAGE INCREASED TO 5MM

CODE	FLUID INLET	HEAD	MAX PRESSURE	
VS80500L	1/4”	11/16”	500 Bar	
VS90500L	16X1.5	11/16”		

CODE	DESCRIPTION
VS00500L	Repair kit spray gun VS 500-L





MANUAL AIRLESS GUN VS 300

CODE	FLUID INLET	HEAD	MAX PRESSURE	
VS300TV00	1/4”	11/16”	250 Bar	
VS300TV01	16X1.5	11/16”		

CODE	DESCRIPTION
KIT300VT0	Repair kit spray gun VS 300

EXPLODED VIEW PAGE 373

STANDARD ACCESSORIES:



FILTER SPRING
Cod. 350000
ST GASKET
Cod. 100030



REVERSIBLE TIP
Cod. ARVXXXA
ULTRA FINISH TIP
Cod. AFFXXX



TIP GUARD
Cod.AR8555051

MANUAL AIRLESS SPRAY GUN



MANUAL AIRLESS GUN VS 818

CODE	FLUID INLET	HEAD	MAX PRESSURE
VS81814	1/4”	7/8”	250 Bar
VS81816	16X1.5	7/8”	
VS818145	1/4”	11/16”	
VS818165	16X1.5	11/16”	

CODE	DESCRIPTION
818500	Repair kit spray gun VS 818

MANUAL AIRLESS GUN VS 360

CODE	FLUID INLET	HEAD	MAX PRESSURE
T503156	1/4”	11/16”	250 Bar
T503157X	16X1.5	11/16”	

CODE	DESCRIPTION
T503092	Repair kit spray gun VS 360

EXPLODED VIEW PAG. 371





MANUAL AIRLESS GUN VS 720

CODE	FLUID INLET	HEAD	MAX PRESSURE
T507155	inlet	11/16”	500 Bar
T50715578	1/4”	7/8”	

CODE	DESCRIPTION
T506092	Repair kit spray gun VS 720

EXPLODED VIEW PAGE. 376

STANDARD ACCESSORIES:



FILTER SPRING
Cod. 350000
ST GASKET
Cod. 100030



REVERSIBLE TIP
Cod. ARVXXXA
ULTRA FINISH TIP
Cod. AFFXXX



TIP GUARD
Cod.AR8555051

MANUAL AIRLESS SPRAY GUN



MANUAL AIRLESS GUN VS 650

CODE	FLUID INLET	HEAD	MAX PRESSURE
VS650TV00	1/4”	11/16”	250 Bar
VS650TV01	16x1.5	11/16”	250 Bar

CODE	DESCRIPTION
KIT650VT0	Repair kit spray gun VS 650

AIRLESS GUN PRO LIGHT 500

COMPLETE WITH BOX KIT WITH GUARD AND NOZZLE 517

CODE	FLUID INLET	HEAD	MAX PRESSURE
17N201	1/4”	7/8”	250 Bar

CODE	DESCRIPTION
G288817	Repair kit spray gun 500





MANUAL AIRLESS GUN MASTIC 24E

CODE	FLUID INLET	HEAD	MAX PRESSURE
24E470	1/4”	7/8”	280 Bar

CODE	DESCRIPTION
237260	Repair kit spray gun Mastic

STANDARD ACCESSORIES:



FILTER SPRING
Cod. 350000
ST GASKET
Cod. 100030



REVERSIBLE TIP
Cod. ARVXXXA
ULTRA FINISH TIP
Cod. AFFXXX



TIP GUARD
Cod.AR8555051

MANUAL AIRLESS SPRAY GUN



MANUAL AIRLESS GUN HG72P

CODE	FLUID INLET	HEAD	MAX PRESSURE
HG72P00	1/4”	7/8”	250 Bar

CODE	DESCRIPTION
HRG72P0	Repair kit spray gun HG72P

MANUAL AIRLESS SPRAY GUN HG76

CODE	FLUID INLET	HEAD	MAX PRESSURE	
HG7600	1/4”	11/16”	250 Bar	
HG760016	16X1.5	11/16”		
HG7500	1/4”	7/8”		
HG750016	16X1.5	7/8”		

CODE	DESCRIPTION
HG760010	Repair kit spray gun HG76



STANDARD ACCESSORIES



FILTER SPRING
Cod. 350000
ST GASKET
Cod. 100030



REVERSIBLE TIP
Cod. ARVXXXA
ULTRA FINISH TIP
Cod. AFFXXX



TIP GUARD
Cod.AR8555051

MANUAL GUN TWO COMPONENTS



MANUAL AIRLESS GUN TWO COMPONENTS 1:1 AB2

CODE	FLUID INLET	HEAD	MAX PRESSURE
FB0345VS	1/4”	11/16”	250 Bar



TWO-COMPONENT LOW-PRESSURE GLA GLUE GUN

Code	Fluid fitting	HEAD	MAX PRESSURE
FB0345VSBP	1/4”	11/16”	20 Bar

MANUAL AIRLESS GUN TWO COMPONENTS 1:1 RE S12

For wall injections and resins

CODE	FLUID INLET	HEAD	MAX PRESSURE
RES12300	1/4”	11/16”	200 Bar



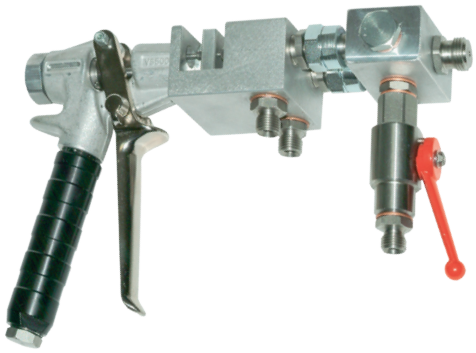

MANUAL AIRLESS GUN TWO COMPONENTS 1:1 AB2MIX

CODE	FLUID INLET	HEAD	MAX PRESSURE
FB0348VS	1/4”	11/16”	200 Bar

STANDARD ACCESSORIES:



FILTER SPRING
Cod. 350000
ST GASKET
Cod. 100030



REVERSIBLE TIP
Cod. ARVXXXA
ULTRA FINISH TIP
Cod. AFFXXX



TIP GUARD
Cod.AR8555051

MIX SPRAY GUN



PISTOLA MIX VS 23

WITH PROFESSIONAL SWIVEL FILTER HOLDER

COMPLETE WITH REVERSIBLE TIP AND GUARD

CODE	FLUID INLET	MAX PRESSURE
0023VS1	1/4”	250 bar

MIX SPRAY GUN VS 23

WITH LONG FILTER HOLDER

COMPLETE WITH REVERSIBLE TIP AND GUARD

CODE	FLUID INLET	MAX PRESSURE
0023VS2	1/4”	250 Bar





MIX SPRAY GUN VS 23

WITH TIP FILTER HOLDER

COMPLETE WITH REVERSIBLE TIP AND GUARD

CODE	FLUID INLET	MAX PRESSURE
0023VS3LM	1/4”	250 Bar
0023VS3LMG	1/4”	250 Bar

STANDARD ACCESSORIES:



FILTER SPRING
Cod. 350000 ST
GASKET
Cod. 100030



ULTRA FINISH TIP
Cod. TUFXXX



TIP GUARD
Cod. VDA001

MIX SPRAY GUNS

THE VS 21 SPRAY GUN MOUNTS NOZZLE AND AIR CAP COMPATIBLE WITH SPRAY GUN WAGNER GM 4600



MIX SPRAY GUN VS 21

WITH PROFESSIONAL SWIVEL FILTER HOLDER

COMPLETE WITH TYPE WAGNER AIR NOZZLE AND AIR CAP

CODE	FLUID INLET	MAX PRESSURE
0021VS1	1/4”	250 Bar

MIX SPRAY GUN VS 21

WITH LONG STAINLESS STEEL FILTER HOLDER

COMPLETE WITH TYPE WAGNER AIR NOZZLE AND AIR CAP

CODE	FLUID INLET	MAX PRESSURE
0021VS2	1/4”	250 Bar





MIX SPRAY GUN VS 21

WITH TIP FILTER HOLDER

COMPLETE WITH TYPE WAGNER AIR NOZZLE AND AIR CAP

CODE	FLUID INLET	MAX PRESSURE
0021VS3LM	1/4”	250 bar
0021VS3LMG	1/4”	250 Bar

STANDARD ACCESSORIES:



AIR CAP RED
Cod. VRWA18R
AIR CAP BLU
Cod. VBWA18S



NOZZLE TYPE WAGNER GM3000/4600
Cod. E460XXX

SPRAY GUNS MIX MANUAL

THE VS 22 SPRAY GUN MOUNTS NOZZLE AND AIR CAP COMPATIBLE WITH SPRAY GUN OPTIMA 2000



MIX SPRAY GUN VS 22

WITH PROFESSIONAL SWIVEL FILTER HOLDER

COMPLETE WITH TYPE OPTIMA 2000 AIR NOZZLE AND AIR CAP

CODE	FLUID INLET	MAX PRESSURE
0022VS1	1/4”	250 Bar

MIX SPRAY GUN VS 22

WITH LONG STAINLESS STEEL FILTER HOLDER

COMPLETE WITH TYPE OPTIMA 2000 AIR NOZZLE AND AIR CAP

CODE	FLUID INLET	MAX PRESSURE
0022VS2	1/4”	250 Bar





MIX SPRAY GUN VS 22

WITH TIP FILTER HOLDER

COMPLETE WITH TYPE OPTIMA 2000 AIR NOZZLE AND AIR CAP

CODE	FLUID INLET	MAX PRESSURE
0022VS3LM	1/4”	250 Bar
0022VS3LMG	1/4”	250 Bar

STANDARD ACCESSORIES:



AIR CAP OPTIMA 2000
Cod. OPTCXXX
RING OPTIMA 2000
Cod. OPTGXXX



NOZZLE TYPE
OPTIMA 2000
Cod. OPTXXX

SPRAY GUNS MIX MANUAL

THE VS 41 SPRAY GUN MOUNTS NOZZLE AND AIR CAP COMPATIBLE WITH SPRAY GUN KREMLIN



MIX SPRAY GUN VS 41 LIGHT

WITH SWIVEL TIP FILTER HOLDER

COMPLETE WITH TYPE KREMLIN AIR NOZZLE AND VX 24 AIR CAP

CODE	FLUID INLET	MAX PRESSURE
10200241	1/4”	250 Bar

MIX SPRAY GUN VS 41 LIGHT

WITH LONG STAINLESS STEEL FILTER HOLDER

COMPLETE WITH TYPE KREMLIN AIR NOZZLE AND VX 24 AIR CAP

CODE	FLUID INLET	MAX PRESSURE
102000VWG	FG 1/4”	250 Bar
10200041	1/4”	250 Bar
102000JIC	1/2 JIC	250 Bar
102000165	16x1.5	250 Bar





MIX SPRAY GUN VS 41 LIGHT

WITH TIP FILTER HOLDER

COMPLETE WITH TYPE KREMLIN AIR NOZZLE AND VX 24 AIR CAP

CODE	FLUID INLET	MAX PRESSURE
102000LM	1/4”	250 Bar
102000LMG	1/4”	250 Bar

STANDARD ACCESSORIES:



AIR CAP TYPE VX 24
Cod. UKSVT01



NOZZLE TYPE KREMLIN
Cod. E554XXXX

SPRAY GUNS MIX MANUAL

THE R2200 AND R210 SPRAY GUN MOUNTS NOZZLE AND AIR CAP COMPATIBLE WITH SPRAY GUN KREMLIN



MIX SPRAY GUN R-2200AC

WITH TIP FILTER HOLDER TYPE KREMLIN

COMPLETE WITH TYPE KREMLIN AIR NOZZLE AND VX 24 AIR CAP

CODE	FLUID INLET	MAX PRESSURE
R2200ACVS	1/4”	200 Bar

MIX SPRAY GUN R-210AC

WITH TIP FILTER HOLDER

COMPLETE WITH TYPE KREMLIN AIR NOZZLE AND VX24 AIR CAP

CODE	FLUID INLET	MAX PRESSURE
R210ACVS	1/4”	100 Bar



STANDARD ACCESSORIES:



AIR CAP TYPE VX 24
Cod. UKSVT01



NOZZLE TYPE KREMLIN
Cod. E554XXXX



FILTER HOLDER TYPE KREMLIN
Cod. PF2200AC

SPRAY GUNS MIX AUTOMATIC

THE RAR 2200 AC SPRAY GUN MOUNTS NOZZLE AND AIR CAP COMPATIBLE WITH SPRAY GUN KREMLIN



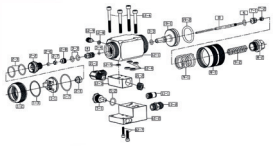

SPARE PARTS EXPLODED VIEW RAR2200AC
PAG. 391

RAR 2200 AC SUPER FINISH SPRAY GUN

The RAR 2200 AC spray gun is the new mix auctomatic spray gun in our range, complete with base with
product recycling and air cap type VX24

CODE	NOZZLE TYPE	TRANSFER EFFICENCY	MAX FLUID PRESSURE	AIR INLET	FLUID INLET	WEIGHT
RAR2200AC	E554XXXX	89 %	200 bar	1/4”	1/4”	820 gr

PRICE INCLUDES KR TYPE MIX NOZZLE

STANDARD ACCESSORIES:



AIR CAP TYPE VX 24
Cod. UKSVT01



NOZZLE TYPE KREMLIN
Cod. E554XXXX

MIX NOZZLES



CODE	DESCRIPTION
OPTXXX	Mix nozzle type Optima 2000

CODE	DESCRIPTION
OP2XXX	Mix nozzle type Optima 2100





CODE	DESCRIPTION
E554XXXX	Mix nozzle type Kremlin for MVX
E552XXXX	Pre atomized mix nozzle type Kremlin for MVX

CODE	DESCRIPTION
E560XXX	Mix nozzle type Graco





CODE	DESCRIPTION
E611XXX	Mix nozzle type Graco G40

CODE	DESCRIPTION
E598XXX	Mix nozzle type Wagner AC2000





CODE	DESCRIPTION
E460XXX	Mix nozzle type Wagner GM 3000 / 4600

CODE	DESCRIPTION
200110	Needles for nozzle cleaning pkg. 12 pcs



UPON REQUEST WE SUPPLY ORIGINAL AND COMPATIBLE FLUID NOZZLES OF THE MAJOR BRANDS ON THE MARKET

OPTIMA TYPE NOZZLES AND AIR CAPS



Cappa aria/ Air cap

CODE

OPTCXXX



Cappa aria/ Air cap

CODE

OP2CXXX

Ghiera/ Lock nut

CODE

OPTGXXX



Ghiera/ Lock nut

CODE

OP2GXXX





CODE	DESCRIPTION
OPTXXX	Mix nozzle type Optima 2000

CODE	DESCRIPTION
OP2XXX	Mix nozzle type Optima 2100



NOZZLE NR.	FAN ANGLE	OPENING 0.000"	OPENING MM
218	20°	0.007	0.18
318	30°	0.007	0.18
418	40°	0.007	0.18
518	50°	0.007	0.18
618	60°	0.007	0.18
223	20°	0.009	0.23
323	30°	0.009	0.23
423	40°	0.009	0.23
523	50°	0.009	0.23
623	60°	0.009	0.23
228	20°	0.011	0.28
328	30°	0.011	0.28
428	40°	0.011	0.28
528	50°	0.011	0.28
628	60°	0.011	0.28
233	20°	0.013	0.33
333	30°	0.013	0.33
433	40°	0.013	0.33
533	50°	0.013	0.33
633	60°	0.013	0.33
238	20°	0.015	0.38
338	30°	0.015	0.38
438	40°	0.015	0.38
538	50°	0.015	0.38
638	60°	0.015	0.38
243	20°	0.017	0.43
343	30°	0.017	0.43
443	40°	0.017	0.43
543	50°	0.017	0.43
643	60°	0.017	0.43

YOU MAY ALSO BE INTERESTED:

SPARE PARTS OPTIMA 2000

COMPLETE SPARE PARTS LIST PAGE: 389

CODE	DESCRIPTION
102003	Gasket Air Cap
1196-24	Mix nozzle gasket
1230-U4	Dipstick

SPARE PARTS OPTIMA 2100

COMPLETE SPARE PARTS LIST PAGE: 388

CODE	DESCRIPTION
1233-9	Air cap gasket
1240-58	Mix nozzle gasket

GRACO NOZZLES AND AIR CAPS

NOZZLE Nr.	FAN ANGLE	OPENING 0.000"	OPENING MM
107	10°	0.007	0.18
207	20°	0.007	0.18
307	30°	0.007	0.18
109	10°	0.009	0.23
209	20°	0.009	0.23
309	30°	0.009	0.23
409	40°	0.009	0.23
509	50°	0.009	0.23
111	10°	0.011	0.28
211	20°	0.011	0.28
311	30°	0.011	0.28
411	40°	0.011	0.28
511	50°	0.011	0.28
611	60°	0.011	0.28
213	20°	0.013	0.33
313	30°	0.013	0.33
413	40°	0.013	0.33
513	50°	0.013	0.33
613	60°	0.013	0.33
713	70°	0.013	0.33
215	20°	0.015	0.38
315	30°	0.015	0.38
415	40°	0.015	0.38
515	50°	0.015	0.38
615	60°	0.015	0.38
715	70°	0.015	0.38
815	80°	0.015	0.38
217	20°	0.017	0.43
317	30°	0.017	0.43
417	40°	0.017	0.43
517	50°	0.017	0.43
617	60°	0.017	0.43
717	70°	0.017	0.43
817	80°	0.017	0.43
917	90°	0.017	0.43
219	20°	0.019	0.48
319	30°	0.019	0.48
419	40°	0.019	0.48
519	50°	0.019	0.48
619	60°	0.019	0.48
719	70°	0.019	0.48
819	80°	0.019	0.48
919	90°	0.019	0.48
321	30°	0.021	0.53
421	40°	0.021	0.53
521	50°	0.021	0.53
621	60°	0.021	0.53
721	70°	0.021	0.53
821	80°	0.021	0.53
921	90°	0.021	0.53



CODE	DESCRIPTION
E611XXX	Mix nozzle type Graco G40
E611GTXXX	Mix nozzle gasket



CODE	DESCRIPTION
611C40	Air cap type Graco G40

YOU MAY ALSO BE INTERESTED IN:

SPARE PARTS GRACO G15 - G40

CODE	DESCRIPTION	REF.GRACO
G40116	Front sleeve gasket G40-G15	111116
G40450	Middle sleeve gasket G40-G15	109450
G40320	PTFE air cap gasket	15G320
G40213	PTFE air cap gasket	109213
G24180	Pre-tip filter 150M ø9mm	241804



WAGNER TYPE NOZZLES AND AIR CAPS



CODE	DESCRIPTION
E460XXX	Mix nozzle type Wagner GM 3000 / 4600

NOZZLE NR.	OPENING 0.000" - MM	FAN ANGLE
07/10	0.007-0.18	100
07/20	0.007-0.18	200
09/20	0.009-0.23	200
09/30	0.009-0.23	300
09/40	0.009-0.23	400
09/50	0.009-0.23	500
11/10	0.011-0.28	100
11/20	0.011-0.28	200
11/30	0.011-0.28	300
11/40	0.011-0.28	400
11/50	0.011-0.28	500
11/60	0.011-0.28	600
13/20	0.013-0.33	200
13/30	0.013-0.33	300
13/40	0.013-0.33	400
13/50	0.013-0.33	500
13/60	0.013-0.33	600
15/10	0.015-0.38	100
15/20	0.015-0.38	200
15/30	0.015-0.38	300
15/40	0.015-0.38	400
15/50	0.015-0.38	500
15/60	0.015-0.38	600
17/20	0.017-0.43	200
17/30	0.017-0.43	300
17/40	0.017-0.43	400
17/50	0.017-0.43	500
17/60	0.017-0.43	600
17/80	0.017-0.43	800
19/20	0.019-0.48	200
19/30	0.019-0.48	300
19/40	0.019-0.48	400
19/50	0.019-0.48	500
19/60	0.019-0.48	600
19/80	0.019-0.48	800
21/20	0.021-0.53	200
21/40	0.021-0.53	400
21/50	0.021-0.53	500
21/60	0.021-0.53	600
21/80	0.021-0.53	800

CODE	DESCRIPTION
VRWA18R	Air cap RED complete compatible with guns GM 3000 - GM 4600AC - GM 4700AC



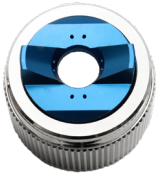

CODE	DESCRIPTION
VBWA18S	Air cap BLU complete compatible with guns GM 3000 - GM 4600AC - GM 4700AC

CODE	DESCRIPTION
VBWA10067S	Ring type GM 3000 - GM 4600 - GM 4700





CODE	DESCRIPTION
VBWA10078S	Air cap gasket type GM 3000 - GM 4600 - GM 4700

CODE	DESCRIPTION
VBWA10018S	Air nozzle RED compatible with gun GM 3000 - GM

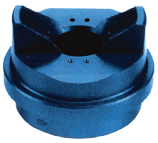



CODE	DESCRIPTION
VRWA10018S	Air nozzle RED compatible with gun GM 3000 - GM 4600AC - GM 4700AC

WAGNER TYPE NOZZLES AND AIR CAPS



CODE	DESCRIPTION
E598XXX	Mix nozzle type Wagner AC2000

Ugello Nr.	Apertura 0.000" - mm	Angolo getto
07/10	0.007-0.18	100
07/20	0.007-0.18	200
09/20	0.009-0.23	200
09/30	0.009-0.23	300
09/40	0.009-0.23	400
09/50	0.009-0.23	500
11/10	0.011-0.28	100
11/20	0.011-0.28	200
11/30	0.011-0.28	300
11/40	0.011-0.28	400
11/50	0.011-0.28	500
11/60	0.011-0.28	600
13/20	0.013-0.33	200
13/30	0.013-0.33	300
13/40	0.013-0.33	400
13/50	0.013-0.33	500
13/60	0.013-0.33	600
15/10	0.015-0.38	100
15/20	0.015-0.38	200
15/30	0.015-0.38	300
15/40	0.015-0.38	400
15/50	0.015-0.38	500
15/60	0.015-0.38	600
17/20	0.017-0.43	200
17/30	0.017-0.43	300
17/40	0.017-0.43	400
17/50	0.017-0.43	500
17/60	0.017-0.43	600
17/80	0.017-0.43	800
19/20	0.019-0.48	200
19/30	0.019-0.48	300
19/40	0.019-0.48	400
19/50	0.019-0.48	500
19/60	0.019-0.48	600
19/80	0.019-0.48	800
21/20	0.021-0.53	200
21/40	0.021-0.53	400
21/50	0.021-0.53	500
21/60	0.021-0.53	600
21/80	0.021-0.53	800

Compatible:

CODE	DESCRIPTION
VRWA28R	Air cap RED complete compatible GA 3000 - AC 2000



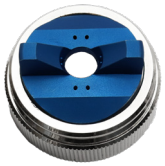

CODE	DESCRIPTION
VBWA28S	Air cap BLU complete compatible GA 3000 - AC 2000

CODE	DESCRIPTION
VBWA10068S	Ring type AC 2000 compatible GA 3000 - AC 2000





CODE	DESCRIPTION
VBWA10028S	Air nozzle BLU compatible GA 3000 - AC 2000

CODE	DESCRIPTION
VRWA10028S	Air nozzle RED compatible GA 3000 - AC 2000



KREMLIN TYPE NOZZLES AND AIR CAPS



CODE	DESCRIPTION
E554XXXX	Mix nozzle type Kremlin for MVX - XCITE
E552XXXX	Pre atomized mix nozzle type Kremlin for MVX - XCITE



CODE	MESH	PRICE	Ø
VSBKR001	75	Filter for Kremlin type nozzle (min.pkg. 10 pcs)	7 MM
VSBKR002	140	Filter for Kremlin type nozzle (min.pkg. 10 pcs)	7 MM
VSBKR003	100	Filter for Kremlin type nozzle (min.pkg. 10 pcs)	7 MM
554GCXX		Mix nozzle gasket type Kremlin	

SIZES FOR NOZZLE E554XXXX

STANDARD SIZE	OPNENING CALIBER	MM	FAN (FAN WIDTH IN CM / DEGREES OPENING) 20° 9	25° 12	30° 17	40° 21	50° 25	55° 29	60° 33	70° 37	80° 44
X07	03	0.18	03034	03054	03074			03134			
X09	04	0.23	04034	04054	04074	04094	04114	04134			
X11	06	0.28	06034	06054	06074	06094	06114	06134	06154		
X13	09	0.33	09034	09054	09074	09094	09114	09134	09154	09174	
X15	12	0.38			12074	12094	12114	12134	12154	12174	
X16	14	0.41		14054	14074	14094	14114	14134	14154	14174	
X18	18	0.48						18134	18154	18174	
X20	20	0.50			20074						
X22	25	0.56						25134			
X24	30	0.61					30114	30134	30154	30174	30194
X28	40	0.72								40174	

SIZES FOR PRE ATOMIZED NOZZLE E552XXXX

STANDARD SIZE	DIAMETRI FORO CALIBER	MM	FAN (FAN WIDTH IN CM / DEGREES OPENING) 20° 9	25° 12	30° 17	40° 21	50° 25	55° 29	60° 33	70° 37
X09	04	0.23	04032	04052	04072	04092	04112	04132		
X11	06	0.28	06032	06052	06072	06092	06112	06132	06152	
X12	07	0.30							07152	
X13	09	0.33	09032	09052	09072	09092	09112	09132	09152	09172
X15	12	0.38			12072	12092	12112	12132	12152	12172
X16	14	0.41			14072	14092	14112	14132	14152	14172



CODE	DESCRIPTION
UKSVT01	Air cap type VX24
UKSVT02	Air cap type BX16
UKSVT03	Air cap type VX114
UKSVT04	Air cap type BX116
UKSVT05	Air cap type VX124

KREMLIN TYPE GASKETS AND O-RINGS



CODE	DESCRIPTION
VSKR0S1	10 O-ring package type ATX-AVX Kremlin cod. 129.251.991

CODE	DESCRIPTION
VSKR0S2	10 O-ring package type ATX Kremlin cod. 129.525.092





CODE	DESCRIPTION
VSKR0S3	10 O-ring package type ATX-AVX Kremlin cod. 129.529.903

CODE	DESCRIPTION
VSKR0S4	10 O-ring package type AVX Kremlin cod. 150.040.329





CODE	DESCRIPTION
VSKR0S5	2 flat gasket package type Kremlin cod. 129.720.075

CODE	DESCRIPTION
VSKR0S6	10 O-ring package type Kremlin cod. 129.729.913





CODE	DESCRIPTION
VSKR0S7	10 O-ring package type Kremlin cod. 150.040.328

CODE	DESCRIPTION
VSKR0S8	10 O-ring package type Kremlin cod. 129.629.914





CODE	DESCRIPTION
VSKR0S9	10 O-ring package type ATX-AVX tipo Kremlin cod. 150.040.330

KREMLIN TYPE MIX SPARE PARTS



CODICE	DESCRIZIONE
VS101065	Head kit with gaskets compatible with Xcite - ref. 129.729.907
VSKN1066	Front gasket sleeve type Xcite - 5 pcs ref. 129.729.912

CODE	DESCRIPTION
VSKN1060	Complete needle catridge compatible with Xcite 200bar - rif. 129.720.250





CODE	DESCRIPTION
VS101068	Head kit with gaskets compatible with ATX - ref. 129.626.400

CODE	DESCRIPTION
VS101009	Complete needle compatible with ATX - ref. 129.626.100





CODE	DESCRIPTION
VS101040	Stainless steel seat with gasket 2 pcs compatible with ATX - ref. 129.629.923

CODE	DESCRIPTION
VS101021	Head kit with gaskets compatible with AVX - MVX - ref. 129.679.907





CODE	DESCRIPTION
VS101011	Complete needle compatible with AVX - MVX - ref. 129.690.050

CODE	DESCRIPTION
VS101039	Stainless steel seat with gasket 2 pcs compatible with AVX - MVX - rif. 129.679.905



REVERSIBLE TIPS AND GUARDS



CODE	DESCRIPTION
T93RXXX	Rev tip T93R Contractor (self-cleaning)

CODE	DESCRIPTION
TUFXXX	Rev tip T93R Ultra Finish (self-cleaning pre atomized)





CODE	DESCRIPTION
TISC6XXX	Rev tip SC 6 Titan (self-cleaning)

CODE	DESCRIPTION
TSLXXX	Rev tip TSL Tritech Sharp Liner for line striper





CODE	DESCRIPTION
AFFXXX	Airlesco AFF pre-atomized tip (self-cleaning)

CODE	DESCRIPTION
ARVXXXA	Rev tip Airlessco ARV (self-cleaning)





CODE	DESCRIPTION
FFLPXXX	RAC X FF LP SwitchTip

NOZZLES AIRLESS VALSPRAY

MADE IN ITALY

NEW PERFORMANCE NOZZLES VALSPRAY



CODE	DESCRIPTION
NSTXXX	Reversible Valtip nozzle (self-cleaning)

NEW CLASSIC SELF-CLEANING NOZZLE



CODE	DESCRIPTION
NUFXXX	Valtip ultra finish nozzle (self-cleaning)

NEW ULTRA-FINISH VALTIP NOZZLE IDEAL FOR WOOD AND METAL FINISHES



CODE	DESCRIPTION
NSLXXX	Valtip super stripe nozzle (self-cleaning)

NEW SUPER STRIPE VALTIP NOZZLE IDEAL FOR PROFESSIONALS TO DRAW LINES



CODE	DESCRIPTION
NLPXXX	Low pressure Valtipnozzle (self-cleaning)

NEW LOW PRESSURE VALTIP NOZZLE
IDEAL FOR EXCELLENT FINISHES FOR INDOOR HYDROPAINTS - NO OVER-SPRAYNG

AIRLESS TIP GUARDS



CODE	DESCRIPTION
AR8555051	Airlessco tip guard 11/16”
AR8555052	Airlessco tip guard 7/8”
AR85GG	Coupling and gasket kit

CODE	DESCRIPTION
VDB002	Nozzle holder body VS 11/16” brass fitting
VDB001	Nozzle holder body VS 7/8” brass fitting
VDB004	Nozzle holder body VS 11/16” stainless steel fitting
VDB003	Nozzle housing VS stainless steel fitting 7/8"
VDB003	Gasket kit and joint for nozzle port vs





CODE	DESCRIPTION
T93R002	Tritech tip guard 7/8”
T93R003	Tritech tip guard 11/16”
T93R004	Coupling and gasket kit

CODE	DESCRIPTION
246437	Graco 11/16” RAC X nozzle holder body
246215	RAC X Graco VS 7/8” nozzle holder body
2462GG	Joint and gasket kit





CODE	DESCRIPTION
T93FXXX	Nozzle T93F standard
T93FUXXX	Nozzle T93F Ultra finish (pre atomized)

CODE	DESCRIPTION
163XXXG	Nozzle 163 standard Graco (pre atomized)





CODE	DESCRIPTION
TUMOXX	Pre atomizer Size 07-09-11-13-15-17-18-19-21
TUMOGX	Pre atomizer gasket



CODE	DESCRIPTION
450960T1	Nozzle with tungsten carbide orifice pattern empty cone T1 for internal painting of pipes up to ø 82 mm
450960T2	Nozzle with tungsten carbide orifice pattern empty cone T1 for internal painting of pipes up to ø 115 mm
450960T3	Nozzle with tungsten carbide orifice pattern empty cone T1 for internal painting of pipes up to ø 152 mm

TIPS SIZES

TIP SIZE TABLE T93R AND T93F

INCHES	MM.	2 - 4	4 - 6	6 - 8	8 - 10	10 - 12	12 - 14	14 - 16	16 - 18	18 - 20
.007”	0,18	107	207	307	407					
.009”	0,23	109	209	309	409	509	609			
.011”	0,28	111	211	311	411	511	611			
.013”	0,33	113	213	313	413	513	613	713	813	
.015”	0,38	115	215	315	415	515	615	715	815	
.017”	0,43	117	217	317	417	517	617	717	817	917
.019”	0,48		219	319	419	519	619	719	819	919
.021”	0,53		221	321	421	521	621	721	821	921
.023”	0,58		223	323	423	523	623	723	823	923
.025”	0,63		225	325	425	525	625	725	825	925
.027”	0,69			327	427	527	627	727	827	927
.029”	0,74			329	429	529	629	729	829	929
.031”	0,79			331	431	531	631	731	831	931
.033”	0,84			333	433	533	633	733	833	933
.035”	0,89			335	435	535	635	735	835	935
.039”	0,99			339	439	539	639	739	839	939
.043”	1,09			343	443	543	643	743	843	943
.045”	1,14				445	545	645	745		
.047”	1,19				447	547	647	747		
.049”	1,24				449	549	649	749		
.051”	1,30				451	551	651	751		
.053”	1,35				453	553	653	753		
.055”	1,40				455	555	655	755		
.063”	1,60				463	563	663	763		
.065”	1,65				465	565	665	765		









TIP SIZE TABLE TUF AND T93FU

INCHES	2 - 4	4 - 6	6 - 8	8 - 10	10 - 12	12 - 14
.008”	108	208	308	408		
.010”	110	210	310	410	510	
.012”	112	212	312	412	512	612
.014”	114	214	314	414	514	614
.016”					516	616
.018”					518	618

TIP SIZE TABLE TSL

INCHES	2” LINE	4” LINE	8” LINE	12” LINE
.013”	213	313	413	
.015”	215	315	415	
.017”	217	317	417	
.019”		319	419	
.021”			421	621
.023”			423	623
.025”			425	625
.027”			427	627
.029”			429	629
.031”			431	631
.035”			435	635

NOZZLE SIZE TABLE 163



INCHES	2 - 4	4 - 6	6 - 8	8 - 10	10 - 12	12 - 14	14-16	16-18	18-20
.008”	108	208		408					
.010”		210	310	410	510	610			
.012”		212	312	412	512	612	712		912
.014”		214	314	414	514	614	714	814	
.016”		216	316	416	516	616	716	816	
.018”			318	418	518	618	718	818	918
.020”				420	520	620		820	
.022”					522	622		822	922
.024”				424		624		824	924
.026”						626		826	
.032”				432				832	

AIRLESS TIP SIZES

TABLE OF ARV AIRLESSCO NOZZLE SIZES

INCHES	MM.	2 - 4	4 - 6	6 - 8	8 - 10	10 - 12	12 - 14	14 - 16	16 - 18
.007”	0,18		207	307					
.009”	0,23	109	209	309	409	509	609		
.011”	0,28	111	211	311	411	511	611		
.013”	0,33	113	213	313	413	513	613		
.015”	0,38	115	215	315	415	515	615	715	815
.017”	0,43		217	317	417	517	617	717	817
.019”	0,48	119	219	319	419	519	619		819
.021”	0,53		221	321	421	521	621	721	821
.023”	0,58		223	323	423	523	623	723	
.025”	0,63		225	325	425	525	625	725	
.027”	0,69		227	327	427	527	627		827
.029”	0,74				429	529	629	729	
.031”	0,79			331	431	531	631		831
.033”	0,84				433	533	633		833
.035”	0,89		235		435	535	635	735	835
.037”	0,93						637		
.039”	0,99						639		
.043”	1,09				443	543	643		
.045”	1,14				445		645		
.051”	1,30				451	551			
.055”	1,40				455	555	655		

TABLE OF NOZZLE SIZES AFF

INCHES	2 - 4	4 - 6	6 - 8	8 - 10	10 - 12
.010”	110	210	310	410	510
.012”	112	212	312	412	512
.014”		214	314	414	514



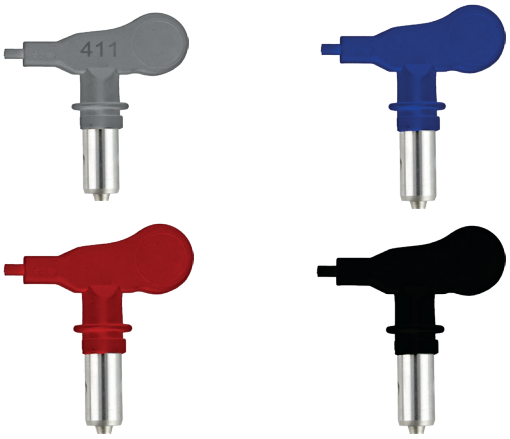

NOZZLE SIZE TABLE NSL VALTIP

INCHES	10CM	15CM	20CM
.015”	215	315	
.017”	217	317	
.019”	219	319	419
.021”		321	421
.027”		327	427

TIP SIZE TABLE NST VALTIP

INCHES	MM.	5CM	10CM	15CM	20CM	25CM	30CM
.007”	0,18	107	207	307	407		
.009”	0,23	109	209	309	409	509	609
.011”	0,28	111	211	311	411	511	611
.013”	0,33	113	213	313	413	513	613
.015”	0,38	115	215	315	415	515	615
.017”	0,43	117	217	317	417	517	617
.019”	0,48		219	319	419	519	619
.021”	0,53		221	321	421	521	621
.023”	0,58		223	323	423	523	623
.025”	0,63		225	325	425	525	625
.027”	0,69		227	327	427	527	627
.029”	0,74		229	329	429	529	629
.031”	0,79		231	331	431	531	631
.033”	0,84		233	333	433	533	633
.035”	0,89		235	335	435	535	635
.039”	0,99				439	539	639
.043”	1,09				443	543	643
.045”	1,14				445	545	645
.047”	1,19				447	547	647
.049”	1,24				449	549	649
.051”	1,30				451	551	651

NOZZLE SIZE TABLE NUF VALTIP

INCHES	5CM	10CM	15CM	20CM	25CM
.008”	108	208	308	408	
.010”	110	210	310	410	510
.012”	112	212	312	412	512
.014”		214	314	414	514
.016”					516

NOZZLE SIZE TABLE NLP VALTIP

INCHES	10CM	15CM	20CM	25CM	30CM
.011”	211	311	411		
.013”	213	313	413		
.015”		315	415	515	615
.017”			417	517	617
.019”			419	519	619
.021”			421	521	621
.023”			423	523	623

EXTENSIONS, JUNCTION AND ROLLERS





CODE	DESCRIPTION
510150	Mini stainless steel extension cm 15 fitting 11/16"
510300	Mini stainless steel extension cm 30 fitting 11/16"
510450	Mini stainless steel extension cm 45 fitting 11/16”
510600	Mini stainless steel extension cm 60 fitting 11/16”
510800	Mini stainless steel extension cm 80 fitting 11/16”
510100	Mini stainless steel extension cm 100 fitting 11/16”
511000	Maxi stainless steel extension cm 100 fitting 11/16”
512000	Maxi stainless steel extension cm 200 fitting 11/16”
510150G	Mini stainless steel extension cm 15 fitting 7/8”
510300G	Mini stainless steel extension cm 30 fitting 7/8””
510450G	Mini stainless steel extension cm 45 fitting 7/8”
510600G	Mini stainless steel extension cm 60 fitting 7/8”
510800G	Mini stainless steel extension cm 80 fitting 7/8”
510100G	Mini stainless steel extension cm 100 fitting 7/8”
511000G	Maxi stainless steel extension cm 100 fitting 7/8”
512000G	Maxi stainless steel extension cm 200 fitting 7/8”
51015AG	Aluminium extension cm 15 fitting 7/8”
51030AG	Aluminium extension cm 30 fitting 7/8”
51050AG	Aluminium extension cm 50 fitting 7/8”
51075AG	Aluminium extension cm 75 fitting 7/8”
51100AG	Aluminium extension cm 100 fitting 7/8”
51150AG	Aluminium extension cm 150 fitting 7/8”
51200AG	Aluminium extension cm 200 fitting 7/8”
52015AG	Aluminium extension cm 15 fitting 11/16”
52030AG	Aluminium extension cm 30 fitting 11/16”
52050AG	Aluminium extension cm 50 fitting 11/16”
52075AG	Aluminium extension cm 75 fitting 11/16”
52100AG	Aluminium extension cm 100 fitting 11/16”
52150AG	Aluminium extension cm 150 fitting 11/16”
52200AG	Aluminium extension cm 200 fitting 11/16”

CODE	DESCRIPTION
24V490	50cm Jet Roller with in-line gun for 18cm roller, nozzle and nozzle holder (roller excluded)
24V491	50cm Jet Roller with in-line gun for 25cm roller, nozzle and nozzle holder (roller excluded)





CODE	DESCRIPTION
T401200	230 mm roller complete with 7/8 “ gun connection
T401201	Replacement roller 230mm with 13mm synthetic coating
T401202	Replacement roller 230mm with 9.5mm synthetic coating
T401203	Replacement roller 230mm with 19mm synthetic coating

EXTENSIONS, JUNCTION AND ROLLERS

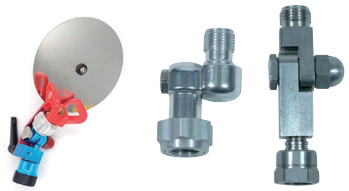

CODE	DESCRIPTION
T101520	Articulated joint TriTech 11/16"
T101515	Articulated joint TriTech 7/8"
111800	Economic articulated joint 7/8"
111801	Economic articulated joint 11/16"
T106042	Fixed 90° joint TriTech 11/16"
T106041	Fixed 90° joint TriTech 7/8"
637800	Articulated joint 7/8” with profile guide



CODE	DESCRIPTION
510010	Adapter F 7/8" x M 11/16"
510009	Adapter F 11/16" x M 7/8"
510011	Adapter F 1/2 UNF x M 7/8"
510211	Adapter F 11/16 UNF x M 7/8”
510012	Standard tip support retainer F 7/8"
109010	Standard tip support retainer F 11/16"
109009	Standard tip support retainer F 11/16" stainless steel

CODE	DESCRIPTION
100030	ST gasket 11/16” ø15
100040	ST gasket 7/8” ø 20

PRESSURE REGULATORS



CODE	DESCRIPTION
400970	Liquid pressure regulator 0-6 bar
400972	Pneumatic liquid pressure regulator 0-6 bar
400974	Stainless steel liquid pressure regulator 0-6 bar
400975	Stainless steel pneumatic liquid pressure regulator 0-6 bar
400977N	Nylon liquid pressure regulator 0-6 bar for acids
400978	Nylon pneumatic liquid pressure regulator 0-6 bar

CODE	DESCRIPTION
RPR500	Liquid pressure regulator 0-6 bar
RPI500	Liquid pressure regulator 0-6 bar with stainless steel passage





CODE	DESCRIPTION
400977	Liquid pressure regulator 0-50 bar

CODE	DESCRIPTION
126001	Liquid pressure regulator 0-25 bar





CODE	DESCRIPTION
HA6100	Liquid pressure regulator 70-200 bar FF 3/8”
HA6900	Liquid pressure regulator for mastic and thick products up to 25 lt / min pressure 7 - 310 bar M 3/4”

CODE	DESCRIPTION
RPR-6S-R1	High precision pneumatic regulator R1 1:1
RPR-6S-R2	High precision pneumatic regulator R2 2:1
RPR-6S-R4	High precision pneumatic regulator R4 4:1



LINE FILTERS



COME WITH CAP, NIPPLES, SWIVEL FITTING

CODE	DESCRIPTION
300000	HA 570 line filter complete with 60M filter and fittings

CODE	REF.	DESCRIPTION
300001	1	Aluminium superior body
300005	2	AVP inferior body
300002	3	PTFE Gasket
300003	4	Aluminium support
300004	5	Stainless steel spring
310XXX	6	Manifold filter
R183800i	7	Spacing washer

CODE	DESCRIPTION
301000	Stainless steel HA 570 line filter complete with 60M filter and fittings

CODE	REF.	PRICE
301001	1	S. steel superior body
301005	2	S. steel inferior body
300002	3	PTFE Gasket
300006R	4	Nylon support
300004	5	Stainless steel spring
310XXX	6	Manifold filter



COME WITH CAP, NIPPLES, SWIVEL FITTING



CODE	DESCRIPTION
300500	FB Mini line filter H 240 mm in aluminum complete with 60M filter and fittings
300501	FB Maxi line filter H 340 mm in aluminum complete with 60M filter and fittings

CODE	DESCRIPTION
300502	PTFE Gasket
300004V	Support with screw
310XXX	Manifold filter

CODE	DESCRIPTION
302000	HA570 stainless steel MAXI line filter H 240 mm in alluminium complete with 60M filter and fittings

CODE	DESCRIPTION
302001	S. steel Maxi inferior body
302005	S. steel Maxi superior body
302002	PTFE Gasket
300004V	Support with screw
310XXX	Manifold filter



LINE FILTERS

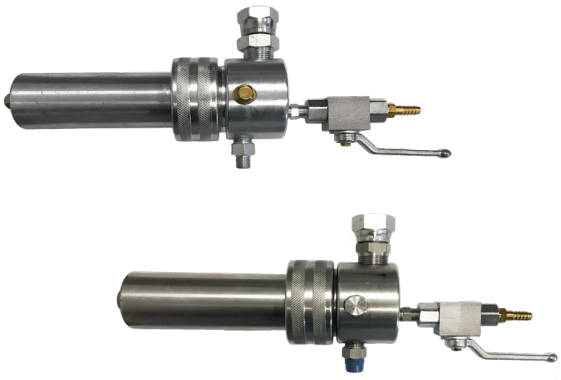

CODE	DESCRIPTION
HA560SCOI	Stainless steel HP 560 line filter complete, pressure up to 500 bar
HA560SCON	AVP HP 560 line filter complete, pressure up to 500 bar

CODE	DESCRIPTION
FB1/201/403PL	Filter PP for catalysts 1/4” F x 1/4” M
FB77003PL	Filter PP for catalysts 1/4” F x 1/4” F
FB1/201/403	Filter S.Steel for catalysts 1/4” M
FB77003	Filter S.Steel for catalysts 3/8” M





CODE	DESCRIPTION
VSBFM62006	Aluminium line filter type T 400 bar

CODE	DESCRIPTION
VSB300001T	Inferior body
VSB300005T	Superior body
300002	PTFE Gasket
VSB300003T	Aluminium support with grain and screw
VSB300004T	Internal filter support nut
310XXX	Manifold filter

CODE	DESCRIPTION
AABB124	PP line filter anti-chip FF 3/4”
AABB125	PP line filter anti-chip FF 1”
AABB126	PP line filter anti-chip FF 1 1/4”
AABB127	PP line filter anti-chip FF 1 1/2”



CODE	DESCRIPTION
CP16905	Anti-chip manifold filter 16 M 3/4” - 1”
CP16903	Anti-chip manifold filter 30 M 3/4” - 1”
CP16906	Anti-chip manifold filter 50 M 3/4” - 1”
CP26905	Anti-chip manifold filter 16 M 1 1/4” - 1 1/2”
CP26903	Anti-chip manifold filter 30 M 1 1/4” - 1 1/2”
CP26906	Anti-chip manifold filter 50 M 1 1/4” - 1 1/2”
CP77170	O-ring gasket



FILTER HOLDER



CODE	DESCRIPTION
300014	Stainless steel filter holder FG 1/4" x M 1/4" STRAIGHT
300038	Stainless steel filter holder FG 3/8" x M 3/8" STRAIGHT
300034	Stainless steel filter holder FG 3/8" x M 1/4" STRAIGHT
300014C	Stainless steel filter holder FG 1/4" x M 1/4" CURVED
300038C	Stainless steel filter holder FG 3/8" x M 3/8" CURVED

CODE	DESCRIPTION
300104	Lower part M 1/4"
300105	Lower part M 3/8"
300101	Upper part FG 1/4"
300106	Upper part FG 3/8"
300103	Central screw
300102	Teflon seal
350000	Filter spring

CODE	DESCRIPTION
300401	Lamellar filter holder INOX FG 1/4" X M 1/4"
300400	Lamellar filter holder INOX FG 3/8" X M 1/4"
RFC-2N	Swivel lamellar filter holder INOX FG 1/4" X M 1/4"
300200	Filter holder BP lamellar F 3/8" X M 1/4"



300200 30040X RFC-2N



CODE	DESCRIPTION
300401J	Lamellar filter holder INOX FG 7/16" X M 1/4"
300400J	Lamellar filter holder INOX FG 1/2 Jic x M 1/2 Jic
300402J	Lamellar filter holder INOX FG 7/16" X M 1/2 Jic

COMPATIBLE WITH KREMLIN THREAD GUNS

CODE	DESCRIPTION
3001134J	Stainless steel filter holder FG 1/2 Jic x M 1/2 Jic
300014J	Stainless steel filter holder FG 1/2 Jic x M 1/4"
300038J	Stainless steel filter holder FG 1/4" x M 1/2 Jic
300105J	Prolonged lamellar filter holder FG 1/4" x M 1/4"
3001134JGC	Stainless steel filter holder FG 1/2 Jic x M 1/2 Jic swivel
300014JGC	Stainless steel filter holder FG 14" x M 1/4" swivel
300038JGC	Stainless steel filter holder FG 1/4" x M 1/2 Jic swivel
300016JGC	Stainless steel filter holder FG 1/4" x M 16x1.5 swivel

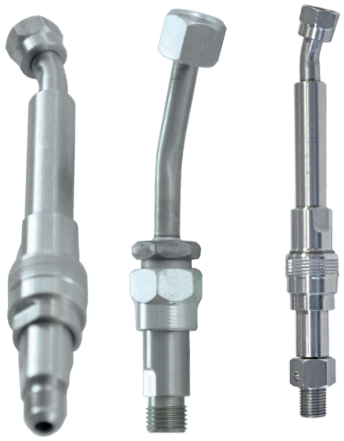

300014J 300105J GC

FILTER HOLDER

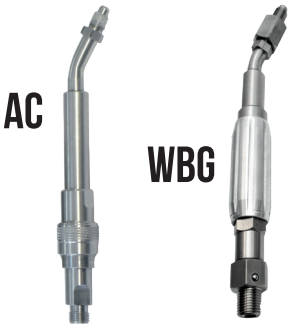

CODE	DESCRIPTION
300G4700AC	Wagner 4700 AC compatible long stainless steel filter holder M 10x1.5 x M 1/4"
02WBG003	FAST stainless steel filter holder compatible Wagner 4700 AC M 10x1.5 x M 1/4"

CODE	DESCRIPTION
WBG001	FAST compatible stainless steel filter holder VS 21-22-23-41 M 10 x M 1/4"
LMG001	LMG compatible lamellar filter holder VS 21-22-23-41 F 1/4" x M 1/4"



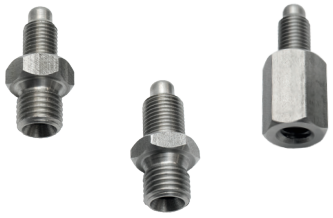

CODE	DESCRIPTION
471015	Nipple thread type Wagner fluid GM 2000 and GM 4700 M 10x1.5 x M 1/4"
301215	Nipple thread type Wagner fluid GM 3000 M 12.15 x M 1/4"
300W470	Wagner fluid thread reduction GM 4700 M 10x1.5 x F 10x1
411012J	Nipple thread type Kremlin fluid Xcite M 10 x M 1/2 Jic

CODE	DESCRIPTION
PF2200AC	Kremlin compatible extended lamellar filter holder model 2200AC FG 7/16 x M 1/4"
300J103J	Kremlin Xcite and ATX thread reduction F 7/16 Jic x M 1/4"



GUN FILTERS



CODE	MESH	DESCRIPTION	H	Ø
350030	30	Green universal gun filter	10 cm	10 mm
350060	60	White universal gun filter	10 cm	10 mm
350080	80	Black universal gun filter	10 cm	10 mm
350100	100	Yellow universal gun filter	10 cm	10 mm
350150	150	Blue universal gun filter	10 cm	10 mm
350200	200	Red universal gun filter	10 cm	10 mm
350300	300	Silver universal gun filter	10 cm	10 mm
350000		Gun filter spring		

CODE	DESCRIPTION
350VXXX	Old model universal gun filter

CODE	MESH	DESCRIPTION	H	Ø
355100	80	White Optima mini gun filter	5 cm	7 mm
355150	150	Yellow Optima mini gun filter	5 cm	7 mm
355295	295	Red Optima mini gun filter	5 cm	7 mm

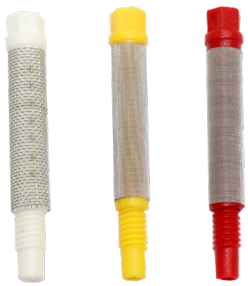



CODE	MESH	DESCRIPTION
14-2664	60	Black Graco type gun filter
14-2665	100	Blue Graco type gun filter
14-2666	150	Orange Graco type gun filter

CODE	MESH	DESCRIPTION
352050	50	Spring tipe filter Graco Blue
352100	100	Spring tipe filter Graco Orange

CODE	MESH	DESCRIPTION
14-2171	30	Green Titan type gun filter
14-2172	60	White Titan type gun filter
14-2173	100	Yellow Titan type gun filter
14-2174	150	Red Titan type gun filter



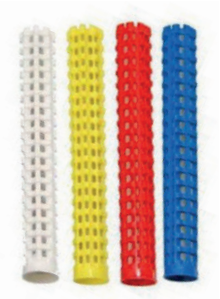

CODE	MESH	DESCRIPTION
2315726	50	Cage white gun filter Wagner pkg. 10 pcs
2315725	100	Cage yellow gun filter Wagner pkg. 10 pcs
2315724	150	Cage blue gun filter Wagner pkg. 10 pcs
2315723	200	Cage red gun filter Wagner pkg. 10 pcs

MANIFOLD FILTERS



CODE	MESH	DESCRIPTION
2315050	50	Wagner cage filter gun stock filter
2315100	100	Wagner cage filter gun stock filter
2315150	150	Wagner cage filter gun stock filter
2315200	200	Wagner cage filter gun stock filter

CODE	MESH	DESCRIPTION
IWS2007	50	Filter type Iwata rif. 3860120
IWS2008	100	Filter type Iwata rif. 3860100



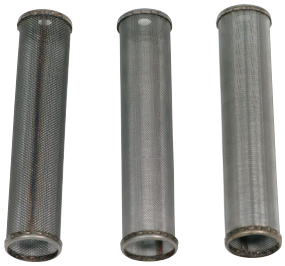

CODE	MESH	DESCRIPTION	H	Ø
310030	30	Manifold filter with hole without fins	144 мм	26,5 мм
310060	60	Manifold filter with hole without fins	144 мм	26,5 мм
310100	100	Manifold filter with hole without finse	144 мм	26,5 мм
310150	150	Manifold filter with hole without fins	144 мм	26,5 мм
310200	200	Manifold filter with hole without fins	144 мм	26,5 мм
310300	300	Manifold filter with hole without fins	144 мм	26,5 мм

CODE	MESH	DESCRIPTION	H	Ø
310030W	30	Manifold filter without hole type Wagner	144 мм	27 мм
310060W	60	Manifold filter without hole type Wagner	144 мм	27 мм
310100W	100	Manifold filter without hole type Wagner	144 мм	27 мм
310200W	200	Manifold filter without hole type Wagner	144 мм	27 мм



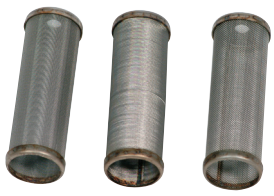

CODE	MESH	DESCRIPTION	H	Ø
315030	30	Mini manifold filter with hole	75 мм	26,5 мм
315060	60	Mini manifold filter with hole	75 мм	26,5 мм
315100	100	Mini manifold filter with hole	75 мм	26,5 мм
315200	200	Mini manifold filter with hole	75 мм	26,5 мм

CODE	MESH	DESCRIPTION	H	Ø
330030	30	Blue maniflod filter	155 мм	25 мм
330060	60	Black maniflod filter	155 мм	25 мм
330100	100	Yellow maniflod filter	155 мм	25 мм
330150	150	Red maniflod filter	155 мм	25 мм
330200	200	White maniflod filter	155 мм	25 мм
330300	300	Orange maniflod filter	155 мм	25 мм



MANIFOLD FILTERS



CODE	MESH	DESCRIPTION	H	Ø
320050	50	Hubner type orange maniflod filter	53 мм	26 мм
320070	70	Hubner type yellow maniflod filter	53 мм	26 мм
320100	100	Hubner type black maniflod filter	53 мм	26 мм
320150	150	Hubner type red maniflod filter	53 мм	26 мм
320200	200	Hubner type white maniflod filter	53 мм	26 мм

CODE	MESH	DESCRIPTION	H	Ø
340200	200	Kremlin type manifold filter 02	115 мм	27 мм
340140	140	Kremlin type manifold filter 04	115 мм	27 мм
340100	100	Kremlin type manifold filter 05	115 мм	27 мм
340085	85	Kremlin type manifold filter 06	115 мм	27 мм
340070	70	Kremlin type manifold filter 08	115 мм	27 мм
340055	55	Kremlin type manifold filter 12	115 мм	27 мм
340045	45	Kremlin type manifold filter 14	115 мм	27 мм





CODE	MESH	DESCRIPTION	H	Ø
300030W	30	Blue Wagner type manifold filter	53 мм	35,5 мм
300060W	60	Black Wagner type manifold filter	53 мм	35,5 мм
3000100W	100	White Wagner type manifold filter	53 мм	35,5 мм
3000200W	150	Red Wagner type manifold filter	53 мм	35,5 мм

CODE	MESH	DESCRIPTION	H	Ø
ZMZFB3101Z	50	Binks type manifold filter	99,5 мм	32 мм
ZMZFB3102Z	100	Binks type manifold filter	99,5 мм	32 мм
ZMZFB3103Z	150	Binks type manifold filter	99,5 мм	32 мм
ZMZFB3104Z	200	Binks type manifold filter	99,5 мм	32 мм





CODE	DESCRIPTION	H	Ø
300006R	Nylon filter support	**150** мм	**22,5** мм
300003	Aluminium filter support with insert	**150** мм	**22,5** мм
300003T	Aluminium filter support without insert	**140** мм	**22,5** мм
300004T	Filter support with cap for colora type filters	**175** мм	**18** мм
300004V	Filter support with screw	**160** мм	**18** мм

CODE	DESCRIPTION	H	Ø
300006RG	Graco type filter support	150 мм	21 мм
300013	Wagner - Titan type spring filter support	141 мм	22 мм
300012	Kremlin type spring filter support	114 мм	21 мм

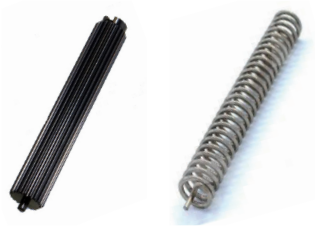

MANIFOLD FILTERS

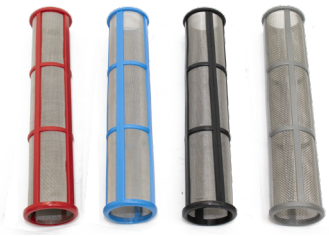

CODE	MESH	DESCRIPTION	H	Ø
14-2694	30	Grey long type Graco manifold filter	180 MM	31 MM
14-2695	60	Black long type Graco manifold filter	180 MM	31 MM
14-2696	100	Blue long type Graco manifold filter	180 MM	31 MM
14-2697	200	Red long type Graco manifold filter	180 MM	31 MM

CODE	MESH	DESCRIPTION	H	Ø
14-2685	60	Graco medium lung filter Black	114 MM	31 MM
14-2686	100	Medium lung filter type Graco Blu	114 MM	31 MM
14-2687	200	Graco Red medium lung filter	114 MM	31 MM

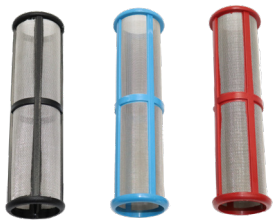

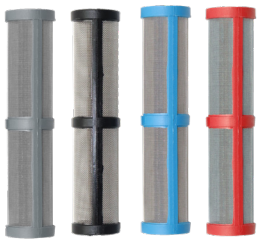

CODE	MESH	DESCRIPTION	H	Ø
14-2674	30	Grey short type Graco manifold filter	91 MM	20 MM
14-2675	60	Black short type Graco manifold filter	91 MM	20 MM
14-2676	100	Blue short type Graco manifold filter	91 MM	20 MM
14-2677	200	Red short type Graco manifold filter	91 MM	20 MM

CODE	MESH	DESCRIPTION	H	Ø
BFM3901WB	60	Sagola type manifold filter	100 MM	22 MM
BFM3902WB	100	Sagola type manifold filter	100 MM	22 MM

CODE	MESH	DESCRIPTION	H	Ø
14-2097	60	Titan type manifold filter	140 MM	20,5 MM

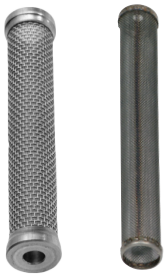

TIP FILTERS KREMLIN TYPE



STANDARD MODEL THICKNESS 1.7MM

CODE	MESH	DESCRIPTION	Ø
VSBKR001	75	Kremlin type tip filter 1,7MM (min. pkg. 10 pcs)	7 MM
VSBKR002	140	Kremlin type tip filter 1,7MM (min. pkg. 10 pcs)	7 MM
VSBKR003	100	Kremlin type tip filter 1,7MM (min. pkg. 10 pcs)	7 MM
VSABKR001	75	Kremlin type tip filter 1,7MM (min. pkg. 500 pcs)	7 MM
VSABKR002	140	Kremlin type tip filter 1,7MM (min. pkg. 500 pcs)	7 MM
VSABKR003	100	Kremlin type tip filter 1,7MM (min. pkg. 500 pcs)	7 MM

NEW MODEL THICKNESS 2.5MM

CODE	MESH	DESCRIPION	Ø
VSBKR004	75	Kremlin type tip filter 2,5MM (min. pkg. 10 pcs)	7 MM
VSBKR005	140	Kremlin type tip filter 2,5MM (min. pkg. 10 pcs)	7 MM
VSBKR006	100	Kremlin type tip filter 2,5MM (min. pkg. 10 pcs)	7 MM
VSABKR004	75	Kremlin type tip filter 2,5MM (min. pkg. 500 pcs)	7 MM
VSABKR005	140	Kremlin type tip filter 2,5MM (min. pkg. 500 pcs)	7 MM
VSABKR006	100	Kremlin type tip filter 2,5MM (min. pkg. 500 pcs)	7 MM

TIP FILTERS



CODE	MESH	DESCRIPTION
390060	60	White tip filter
390080	80	Blue tip filter
390100	100	Black tip filter
390150	150	Red tip filter
390200	200	Yellow tip filter

CODE	DESCRIPTION
390XXX	Tip filter 60 / 80 / 100 M - MOQ 300 pcs

CODE	MESH	DESCRIPTION
380050	60	Nylon tip filter with stainless steel net 14mm
380100	100	Nylon tip filter with stainless steel net 14mm
380200	200	Nylon tip filter with stainless steel net 14mm
BE3800		Stainless steel tip filter support
BE3801		Nylon cap for tip filter support
381050	60	Stainless steel net 14mm
381100	100	Stainless steel net 14mm
381200	200	Stainless steel net 14mm





CODE	MESH	DESCRIPTION	H	Ø
BEFM280103		Nylon tip filter support type ATX		
BEFM280043	50	Stainless steel net for tip filter ATX	11 мм	9,5 мм
BEFM28053	70	Stainless steel net for tip filter ATX	11 мм	9,5 мм
BEFM28063	85	Stainless steel net for tip filter ATX nr. 6	11 мм	9,5 мм
BEFM28073	100	Stainless steel net for tip filter ATX	11 мм	9,5 мм
BEFM28083	140	Stainless steel net for tip filter ATX nr. 4	11 мм	9,5 мм
BEFM28093	200	Stainless steel net for tip filter ATX nr. 2	11 мм	9,5 мм

COMPATIBLE WITH KREMLIN ATX SPRAY GUN

CODE	MESH	DESCRIPTION	H	Ø
BEFM28056Z		Stainless steel tip filter support type AVX		
BEFM28050Z	50	Stainless steel net for tip filter AVX nr. 12	17,5 мм	9,5 мм
BEFM28051Z	60	Stainless steel net for tip filter AVX	17,5 мм	9,5 мм
BEFM28052Z	85	Stainless steel net for tip filter nr. 6	17,5 мм	9,5 мм
BEFM28053Z	100	Stainless steel net for tip filter AVX	17,5 мм	9,5 мм
BEFM28054Z	140	Stainless steel net for tip filter AVX nr. 4	17,5 мм	9,5 мм
BEFM28055Z	200	Stainless steel net for tip filter AVX	17,5 мм	9,5 мм



COMPATIBLE WITH KREMLIN ATX SPRAY GUN

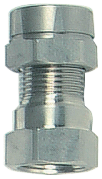

CODE	DESCRIPTION
300300	Tip filter holder 11/16”

SUCTION FILTER



CODE	MESH	DESCRIPTION	Ø
370015	30	Suction filter assembly F 15x1	89 MM
370012	30	Suction filter assembly F 1/2”	89 MM
370115		Bare suction filter holder F 15x1	89 MM
370112		Bare suction filter holder F 1/2”	89 MM
370001		Angular spring for suction filter ø87/89	



CODE	MESH	DESCRIPTION	Ø
370030P	30	Red nylon disk filter with stud	89 MM
370050P	50	Yellow nylon disk filter with stud	89 MM
370100P	100	White nylon disk filter with stud	89 MM

CODE	MESH	DESCRIPTION	Ø
370030F	30	Orange nylon disk filter type FM with stud	87 MM
370050F	50	Red nylon disk filter type FM with stud	87 MM
370100F	100	White nylon disk filter type FM with stud	87 MM



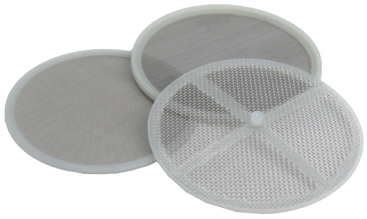

CODE	MESH	DESCRIPTION	Ø
371030EP	30	Nylon disk filter with metallic net for VS25	89 MM
371050EP	50	Nylon disk filter with metallic net for VS25	89 MM
371100EP	100	Nylon disk filter with metallic net for VS25	89 MM

CODE	MESH	DESCRIPTION	Ø
37C000	50	Colora type suction filter assembly F 16mm	57 MM
37C001	50	Colora type suction filter assembly F 15x1.5	57 MM
37C002	50	Colora type suction filter assembly F 1/2”	57 MM
371030C	30	Colora type metallic disk filter	57 MM
371040C	40	Colora type metallic disk filter	57 MM
371050C	50	Colora type metallic disk filter	57 MM
371070C	70	Colora type metallic disk filter	57 MM
371100C	100	Colora type metallic disk filter	57 MM
37C0011		Round spring for suction filter	57 MM



SUCTION FILTER

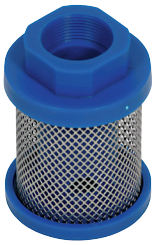

CODE	MESH	DESCRIPTION	Ø
365030	30	Mini suction filter complete F 28x1.5	55 MM
365060	60	Mini suction filter complete F 28x1.5	55 MM
365130	30	Net for mini suction filter	45 MM
365160	60	Net for mini suction filter	45 MM
365000		Body for mini suction filter F 28x1.5	

CODE	MESH	DESCRIPTION	Ø
361515	15	Metallic suction filter F 15 x 1	48 MM
361530	30	Metallic suction filter F 15 x 1	48 MM
361560	60	Net for mini suction filter F 15 x 1	48 MM
361215	15	Net for mini suction filter F 1/2”	48 MM
361230	30	Net for mini suction filter F 1/2”	48 MM
361260	60	Net for mini suction filter F 1/2”	48 MM
363430	30	Net for mini suction filter F 3/4”	48 MM
363460	60	Net for mini suction filter F 3/4”	48 MM
362815	15	Net for mini suction filter F 28 x 1.5	48 MM
362830	30	Net for mini suction filter F 28 x 1.5	48 MM
362860	60	Net for mini suction filter F 28 x 1.5	48 MM
361015	15	Net for mini suction filter 1 inch	48 MM





CODE	MESH	DESCRIPTION	Ø
360030	30	Big metallic suction filter F 28x1.5	100 MM
360060	60	Big metallic suction filter F 28x1.5	100 MM
360130	30	Net for big suction filter	95 MM
360160	60	Net for big suction filter	95 MM

CODE	MESH	DESCRIPTION	Ø
14-2843	32	Plastic suction filter M 3/4”GH for SP 380	288716
14-2649	30	Plastic suction filter F 7/8” for Ultra 395/495/695	246385
14-1428	10	Metallic suction filter F 3/4” NPT for Ultramax 695	183770
14-223S	10	Metallic suction filter F 1” in stainless steel for Ultramax 795/1095/1595	181072
14-1223	10	Plastic suction filter F 1” for Ultramax 795/1095/1595	
14-3064	10	Plastic suction filter F 3/4” 16 UNF for Airlessco MP - LP	331217
14-2179	8	Metallic suction filter F 1” NPT for Airlessco SL 1250 - TS 1750 - HSS 9950	189920





CODE	MICRON	DESCRIPTION
SL9000		Filtering sock support
SL1000	210	White paint filtering socks (5 pcs/pack)
SL4000	300	Yellow dispersion filtering socks (5 pcs/pack)
SL4001	300	25 lt tank filtering socks (3 pcs/pack)

MEMBRANES AND CARTS

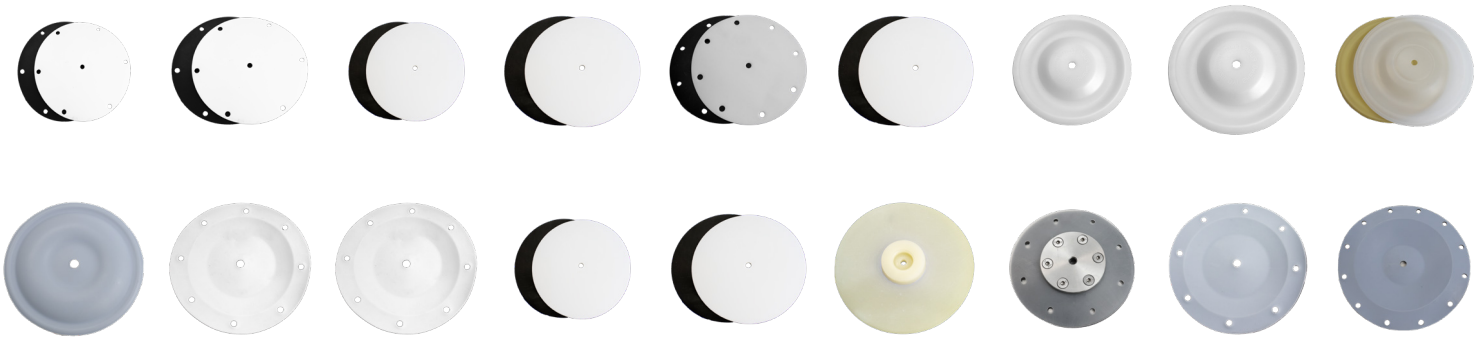

CODE	DESCRIPTION	HOLES	Ø
040120	Membrane kit type COLORA PM 120 da 1 PTFE + 1 Rubber fabric	6+1	138MM
040140	Membrane kit type COLORA PM 500 da 1 PTFE + 1 Rubber fabric	6+1	212MM
040135	Membrane kit type IWATA DDP 90 da 1 PTFE + 1 Rubber fabric	1	108MM
040136	Membrane kit type IWATA DDP 120 da 1 PTFE + 1 Rubber fabric	1	138MM
040125	Membrane kit type KREMLIN PMP 150 da 1 PTFE + 1 Rubber fabric	8+1	150MM
212490	Membrane kit VS 24 da 1 PTFE + 1 Rubber fabric	1	149MM
PB0029	Membrane VS 50 - VAPA20U	1	121MM
PB0032	Membrane VS 50 - VAPA20U	1	143MM
PB0033	Membrane VS 180 - VAPA31U	1	223MM
040101	Joint membrane type Wagner ZIP 52	1	117MM
040102	Joint membrane type Sinaer 2002	8+1	142MM
040100	Joint membrane type Monomix	8+1	142MM
FA00C1	Membrane kit type FALCIONI da 1 PTFE + 1Rubber fabric	1	111MM
040116	Membrane kit type VERIND da 1 PTFE + 1 Rubber fabric	1	125MM
T040116	Membrane TAIVER Boxer nylon 11	1	148MM
28005L	Membrane kit type VS 28 3:1 a 1 nylon 11 + 1 Rubber fabric	8+1	148MM
25005	Joint membrane VS 25	8+1	140MM
02012	Joint membrane VS 36i	12+1	163MM

GUSSETS



CODICE	DESCRIZIONE
SL9000SOF	7-edge soft teflon gusset hole Ø 17,60mm
SL1000SOF	7-edge soft nylon gusset hole Ø 17,60mm

COMPATIBLE PUMPING GASKET



CODE	DESCRIPTION	REF. OEM	Ø INT	Ø EST	THICKNESS
913010	PTFE gasket Maves K 25	142570R-142571R	15 MM	28 MM	5 MM
913012	PTFE gasket Maves K 30	143080-143081	20 MM	28 MM	4 MM
912302	PTFE gasket Graco 23:1 sup.	164912	15 MM	28 MM	5 MM
912301	PTFE gasket Graco 23:1 inf.	164913	13 MM	21 MM	3 MM
913014	PTFE gasket Graco 30:1	164862	20 MM	28 MM	4 MM
914512	PTFE gasket Graco 45:1	223480	35 MM	52 MM	4,5 MM
916012	PTFE gasket Graco 60:1	164918	32 MM	46 MM	4 MM
912304	PTFE gasket Larius 23:1 sup.	91031	15 MM	28 MM	5 MM
912303	PTFE gasket Larius 23:1 inf.	91022	14 MM	22 MM	3 MM
913001	PTFE gasket Larius 30:1	96074	20 MM	28 MM	4,5 MM
914510	PTFE gasket Larius 45:1	95010	35 MM	50 MM	5 MM
916010	PTFE gasket Larius 60:1	95504	32 MM	46 MM	5 MM
913312	PTFE gasket Iwata 331 sup.	0493210000	16 MM	33 MM	5 MM
913311	PTFE gasket Iwata 331 inf.	0493010000	12 MM	24 MM	4,50 MM
914312	PTFE gasket Iwata 431 sup.	0494015000	20 MM	32 MM	5 MM
914311	PTFE gasket Iwata 431 inf.	0494215000	19 MM	29 MM	4 MM
950782	PTFE gasket Falcioni 78 sup.	20-30-056	19 MM	29 MM	4 MM
950781	PTFE gasket Falcioni 78 inf.	20-30-057	12 MM	28 MM	4 MM
950102	PTFE gasket Falcioni H 100 sup.		19 MM	35,5 MM	5,5 MM
950101	PTFE gasket Falcioni H 100 inf.		14 MM	28 MM	5,5 MM
950202	PTFE gasket Falcioni H 200 sup.	20-30-081	28 MM	40 MM	5,5 MM
950201	PTFE gasket Falcioni H 200 inf.	20-30-080	20 MM	32,5 MM	5,5 MM
913201	PTFE gasket Val Spray TN sup.		22 MM	35 MM	5,5 MM
913203	PTFE gasket Val Spray TN inf.		30 MM	42 MM	6,5 MM
913202	Leather gasket al Spray TN sup.		22 MM	35 MM	5,5 MM
913204	Leather gasket Val Spray TN inf.		30 MM	42 MM	6,5 MM
913205	PTFE gasket Val Spray TS sup.		28 MM	41 MM	4,5 MM
913207	PTFE gasket Val Spray TS inf.		40 MM	54 MM	6,5 MM
913206	Leather gasket Val Spray TS sup.		27,5 MM	41 MM	4,5 MM
913208	Leather gasket Val Spray TS inf.		40 MM	54 MM	6,5 MM
913501	PTFE Gasket Cima 30:1 sup.		19 MM	30 MM	5 MM
913502	PTFE Gasket Cima 30:1 inf.		21 MM	33,5 MM	5 MM
913801	PTFE Gasket Sinaer 32:1 sup.		18 MM	28 MM	6 MM
913802	PTFE Gasket Sinaer 32:1 inf.		22 MM	31 MM	6 MM
913701	PTFE Gasket 32/12		25 MM	40 MM	4 MM

COMPATIBLE PUMPING GASKETS



CODE	DESCRIPTION	REF. OEM	Ø INT	Ø EST	THICKNESS
963282	PTFE gasket Binks H 328 sup.	0114-016003	12 MM	25 MM	6 MM
963281	PTFE gasket Binks H 328 inf.	0114-016004	17MM	30 MM	6 MM
964322	PTFE gasket Binks H 432 sup.	0114-014559	14 MM	27 MM	5 MM
964321	PTFE gasket Binks H 432 inf.	0114-014558	20 MM	36 MM	6 MM
966342	PTFE gasket Binks H 634/660 sup.	0114-018924	17 MM	30 MM	6 MM
966341	PTFE gasket Binks H 634/660 inf.	0114-018925	24 MM	37 MM	6 MM
961032	PTFE gasket Binks H 1032/1018 sup.	0114-016000	24 MM	37 MM	6 MM
961031	PTFE gasket Binks H 1032/1018 inf.	0114-016001	34 MM	47 MM	6 MM
962542	PTFE gasket Binks H 2548 sup.	0114-016011	28 MM	41 MM	6 MM
962541	PTFE gasket Binks H 2548 inf.	0114-016012	39 MM	53 MM	6 MM
963284	Leather gasket Binks H 328 sup.	0114-014491	12 MM	25 MM	4 MM
963283	Leather gasket Binks H 328 inf.	0114-014493	17MM	30 MM	4 MM
964324	Leather gasket Binks H 432 sup.	0114-014513	14 MM	27 MM	4 MM
964323	Leather gasket Binks H 432 inf.	0114-014559	20 MM	35 MM	4 MM
966344	Leather gasket Binks H 634/660 sup.	0114-014477	17 MM	30 MM	4 MM
966343	Leather gasket Binks H 634/660 inf.	0114-014476	24 MM	37 MM	4 MM
961034	Leather gasket Binks H 1032/1018 sup.	0114-014505	24 MM	37 MM	4 MM
961033	Leather gasket Binks H 1032/1018 inf.	0114-014498	34 MM	47 MM	4 MM
962544	Leather gasket Binks H 2548 sup.	0114-013692	28 MM	41 MM	4 MM
962543	Leather gasket Binks H 2548 inf.	0114-013694	39 MM	53 MM	4 MM
913601	PTFE Gasket Macver 30/50 sup.		23 MM	39 MM	6 MM
913602	PTFE Gasket Macver 30/50 inf.		32 MM	44 MM	4,5 MM
913611	PTFE Gasket Macver 33/110 sup.		33 MM	45 MM	5 MM
913612	PTFE Gasket Macver 33/110 inf.		47 MM	59 MM	5 MM
941181	PTFE Gasket Colora 181/201/301 inf.				
941281	PTFE Gasket Colora 181/201/281/301 sup. 401 inf.		18 MM	29 MM	4,5 MM
942281	PTFE Gasket Colora 281 inf.		25 MM	36 MM	4,5 MM
941371	PTFE Gasket Colora 371 sup.		23 MM	37,5 MM	6 MM
942371	PTFE Gasket Colora 371 inf.		32 MM	45,5 MM	6 MM
941401	PTFE Gasket Colora 401 sup.		13 MM	25 MM	3,5 MM
913901	PTFE Gasket Wiwa 4032 / 5032 sup.	1311553	15 MM	27 MM	5,5 MM
913501	PTFE Gasket Wiwa 4032 inf.	1311588	19 MM	30 MM	5 MM
950201	PTFE Gasket Wiwa 6030 / 6530 sup.	1634479	20 MM	32,5 MM	5,5 MM
913205	PTFE Gasket Wiwa 6030 / 6530 inf.	1634478	28 MM	41 MM	4,5 MM
913902	PTFE Gasket Wiwa 4233 sup.	1644396			
913903	PTFE Gasket Wiwa 4233 inf.	1644214	20 MM	31,5 MM	5,5 MM

COMPATIBLE PUMPING GASKET KIT



COMPATIBLE LARIUS

CODE	REF.	QTY.	DESCRIPTION
930123	40045	4+4	VEGA 23:1
930130	40055	5+5	GHIBLI 30:1
930145	40070	5+5	NOVA 45:1 / OMEGA 23:1
930160	40075	5+5	NOVA 60:1 / OMEGA 30:1

COMPATIBLE MAVES

CODE	REF.	QTY.	DESCRIPTION	
930025		12	K 25	
930030	143080K	12	K 30	

COMPATIBLE IWATA

CODE	REF.	QTY.	DESCRIPTION	
930331		6+6	331 / 333	
930431		6+6	431 / 433	

COMPATIBLE BINKS / HUBNER

CODICE	RIF	DESCRIZIONE
014511	0114-014513/2	H 432
014475	0114-014477/6	H 634 / 660
014500	0114-014505/498	H 1032 / 1018
013690	0114-013692/4	H 2548





COMPATIBLE MACVER

Code	RIF.	QTY.	Description
013350	Pos. 13+16	5+5	30/50
033110	Pos. 13+16	5+5	33/110

COMPATIBLE MECART

Code	RIF.	Description
032125	Gasket + holder	32/12

VAL SPRAY

CODE	DESCRIPTION
930321	Gasket kit VTN 321/401/ECO 401/S-ECO 25 (5 inf + 7 sup)
930323	Gasket kit VTN 010/201 + VTS 301 (5 inf + 7 sup)
930325	Gasket kit VTX 051



COMPATIBLE PUMPING GASKET GRACO





GRACO REPAIR KIT COMPLETE WITH SPHERES AND GASKETS

CODE	REF. GRACO	DESCRIPTION
20-1856	235703	395st - 495st - 390st - 455st - 490st - Ultra 600 - 590st 595 st - Ultra 600 plus - 600 Ultimate - Line Lazer 3000
20-2428	244194	295st - 395st - 495st - Ultra 395 - 495 - St Max 495 Ultimate Mx II 495 - Ultramax II 490 - 490st Pro Ultramax II 495 - 595st Max - 595st Max II - Ultra 595 Ultramax II 595 - 695 Ultimate - 695 Ultimate Mx Ultra 695 - Ultramax 695 - Line Lazer 3400
20-2662	248212	SL 1250 - Ultimate Mx II 695 - Ultramax II 695 Ultimate Mx 795 - Ultramax 795 - Ultramax II 795 Ultramax 1095 - Ultimate Mx 1095 Line Lazer 3900 - Line Lazer 3900 II
20-2663	248213	TS 1750 - UltraMax II 1095 - UltraMax 1595 Ultramax II 1595 - Ultimate Mx II 1095 - GMax 5900 Ultimate Mx 1595 - Ultimate Mx II 1595 - Mark V
20-2917	249123	Mark X (stainless steel spheres) - Ultramax II 1895 -Gmax II 7900 - Texspray 7900 HD
20-3193	16X431	Mark X (ceramic spheres) - Gmax II 7900 Texspray 7900 HD
20-3194	24N012	EH 200DI - DutyMax EH 230 - GH 200DI DutyMax EH 300
20-3195	24V063	Mark IV - Texspray Mark IV
20-1499	222588	Line Lazer 3500 - Ultra 333 - Ultra 433 - Ultra 1000 GM 3500 - EM 590
20-2639	246341	GH 200 - GMax 7900 - Hydramax 225
20-3047	24F965	250cc Xtreme 1045
20-3009	24F967	220cc Xtreme 900
20-2914	287813	EH 200 - GH 200 - GH 230 - GH 300
20-3200	24A253	Merkur 75cc LW075A
20-380	206733	MONARK 15:1 / PRESIDENT 30:1
20-1084	218135	MONARK 23:1
20-983	207729	BULLDOG 10:1 / KING 20:1
20-855	207966	BULLDOG 20:1 / KING 45:1
20-381	206735	BULLDOG 30:1 / KING 63:1
20-2294	237239	BULLDOG 33:1 / KING 68:1

AIRLESSCO REPAIR KIT COMPLETE WITH SPHERES AND GASKETS

CODE	REF. GRACO	DESCRIPTION
20-1999	331210	LP 400 - LP 460 - LP 540 - LP 690
20-1815	865672	SL 810 - SL 1100
20-2662	248212	SL 1250
20-2663	248213	TS 1750
20-3194	24N012	HSS 9950



COMPATIBLE SPARE PARTS GRACO





PUMP SLEEVE

CODE	REF.GRACO	DESCRIPTION
57-2099	235708	395st - 490st - 495st - 590st - 595 st - Ultra 600 Ultra 600 plus - Ultimate 600- Line Lazer 3000
57-2775	243176	395st Pro - St Max 395 - Ultramax 495 - St Max 490 595st Max II - Ultra 595 - Ultramax II 595 - 695 Ultimate Ultra 695 - Line Lazer 3400
57-2273	240521	Ultramax II 695 - Ultimate Mx 795 - Ultramax 795 - Ultramax II 795 - Ultramax 1095 - Ultimate Mx 1095 Line Lazer 3900 - Line Lazer 3900 II - Mark IV
57-2529	240525 - 248210	Ultimate Mx 1595 - Ultimate Mx II 1595 - GMax 5900 Ultiramax 1595 - Ultramax II 1595 - Mark V GMax 5900HD - IronMan 300E - 1500
57-3185	248980	HSS 9000 - HSS 9950 - GH300

PISTON ROD AND KIT

CODE	REF. GRACO	DESCRIPTION
57-1946	235709	Piston 395st - 490st - 495st - 590st - 595 st - Ultra 600 Ultimate 600 - Line Lazer 3000
57-3042	249125	Repair kit piston 190ES - 390 - St Max 595 - Ultramax II 495 - St Max 595 - Ultra 595 - Ultramax II 595 - Ultra plus 600 - Ultimate 695 Ultimate Mx 695 - Ultra 695 Ultra max 695 - Line Lazer 3400
57-2670	240518	Piston Ultramax II 695 - Ultimate Mx 795 - Ultimate Mx II 795 - Ultramax 795 - Ultramax II 795 - Ultramax 1095 Ultimate Mx 1095 - Line Lazer II 3900 - Line Lazer III 3900
57-2672	240517	Piston Ultramax 1095 - Ultimate Mx II 1095 - GMax 5900 - Ultimate Mx 1595 - Ultimate Mx II 1595 Ultramax 1595 - Ultramax II 1595 for MARK V
57-3072	249028	Mark V - GMax 5900HD - Iron Man 300E







GUNS REPAIR KIT

CODE	REF. GRACO	DESCRIPTION
20-1502	218070	Contractor - FTx - ST - SG3
20-2701	287031	Contractor II / FTx-II

VALVES

CODE	REF. GRACO	DESCRIPTION
20-2324	235014	Bleed valve (bare)
58-2564	239932	Piston valve Ultramax 795 - Ultramax 1095
58-2567	240150 24U993	Piston valve GMax 5900 - Mark IV
20-2757	246429	Valve kit





COMPATIBLE SPARE PARTS TITAN

TITAN REPAIR KIT COMPLETE WITH SPHERES AND GASKETS





CODE	REF. TITAN	DESCRIPTION
20-2397	704-113	340 - Epic 300HP
20-2242	730-401	440i - Epic 440HP - Epic 440i - Epic 440 xc - 660 HPX 660 xc - 640i
20-2209	702-140	440e - Epic 440e - 447 ex - 660 ex - 690 gx
20-2727	704-586	Impact 440 - 440ix - impact 540 - 540ix - Impact 640 640ix - 600ix
20-2810	800-450	740ix - Epic 470i - PowrLiner 2800M
20-2849	800-273	Impact 740 - Impact 840 - 840ix - 840i -1140ix Epic 1140i - 1140i
20-3192	0558740	Impact 1040 - Impact 1140

SPEEFLO REPAIR KIT COMPLETE WITH SPHERES AND GASKETS

CODE	REF. TITAN	DESCRIPTION
20-1857	107-051	Powr Liner 4900 - Powr Twin 4900
20-1853	143-050	Powr Liner 6900 - Powr Twin 6900
20-2152	144-050	Powr Liner 8900 - Powr Twin 8900 / 1200
20-1318	185-050	HydraPro III - IV - Super
20-2396	245-050	Hydra M 4000

REPAIR KIT PISTON ROD TITAN AND SPEEFLO

CODE	REF. TITAN	DESCRIPTION
57-2720	704-560	340 - 440i - 640i -Impact 540 - Impact 440 - 440ix Epic 440 HP - 540ix - Impact 640 - 640ix - 660ix - 660HPX
57-2780	75-120A	740i - 740ix - Power Liner 2800M
57-2820	800-246	Epic 840i - Epic 1040i - 840ix - 1140ix
57-3038	805-235A	Impact 740 - Impact 840
57-3294	805-247A	Impact 1040 - Impact 1140
57-2270	107-029	Power Liner 4900 - Power Twin 4900
57-2274	143-117	Power Liner 6900 - Power Twin 6900 - Taiver HTP 21000
57-2594	144-117	Power Liner 8900 - Power Twin 8900 / 1200





PUMP SLEEVE SPEEFLO



CODE	REF. TITAN	DESCRIPTION
57-3219	107-946	Power Liner 4900 - Power Twin 4900
57-2329	143-822	Power Liner 6900 - Power Twin 6900
57-2587	144-822	Power Liner 8900 - Power Twin 8900 / 1200

COMPATIBLE SPARE PARTS TITAN



TITAN COMPATIBLE SPARE PARTS

CODE	REF. TITAN	DESCRIPTION
57-2437T	762-137	Intake valve seat 340 - 440i - 640i
20-7776	800-241	Intake valve seat 740i - 840i - 1140i
58-2435	704-558	Compression valve seat 440i - 640i
58-2761	800-243	Compression valve seat 740i - 840i - 1140i
29-2600	700-258	Complete bleed valve assembly (Viton)
29-2835	800-915	Complete bleed valve assembly (Solvent resistant)
20-2095	580-034	Repair kit LX 80
20-2088	520-025	Repair kit S 5 - SGX 20

SPEEFLO COMPATIBLE SPARE PARTS

CODE	REF. TITAN	DESCRIPTION
58-2437	762-137	Intake valve seat PowrTwin 4900
58-2405	106-011	Compression valve seat PowrTwin 4900
58-2327	193-945	Complete bleed valve assembly PowrTwin 4900 / 6900
29-2580	944-620	Complete bleed valve assembly PowrTwin 4900 / 6900
14-2299	103-627	Suction filter 1 1/4”
14-2344	930-005	Manifold filter 5M with sphere
20-2439	235-050	Air motor repair kit PT 4900 / 6900 / 8900 / 12000

COMPATIBLE SPARE PARTS WAGNER

WAGNER COMPATIBLE PUMP GASKET KIT

CODE	REF. WAGNER	TYPE	DESCRIPTION
930121	T946.00	COMPLETE	Colora C 121
930181	T922.00	COMPLETE	Colora C 181 - 201 - 301
930251	T914.00	COMPLETE	Colora C 251
930281	T940.00	COMPLETE	Colora C 281
930371	T936.00	COMPLETE	Colora C 371
930401	T919.00	COMPLETE	Colora C 401
20-3187	0508221	COMPLETE	Repair kit Pro Spray 27 - 30 - 31 - 34 - 3.29 - 3.31
932840	115805+367991	GASKETS ONLY	Puma 28/40
931515	368991+367991	GASKETS ONLY	Puma 15/150 W35/70 - 35/150 Leopard
934015	T919.00E	GASKETS ONLY	Evomotion 40/15
932030	T922.00E	GASKETS ONLY	Evomotion 20/30
COL32030	T6154.001	PISTON 281 STAINLESS STEEL	Colora
COL34015	T6159.001	PISTON 371 STAINLESS STEEL	Colora



PUMPING AND REPAIR KIT VAL SPRAY

GRACO XTREME COMPATIBLE PUMPING AND KIT





CODE	DESCRIPTION
GX45200	Displacement pump compatible with Xtreme 250cc Rif. L250C1
RX45200	Pump repair kit Xtreme 250cc complete with spheres and gaskets ref. 25D264

CODE	DESCRIPTION
GX56200	Displacement pump compatible with Xtreme 220cc Rif. L220C1
RX56200	Pump repair kit Xtreme 220cc complete with spheres and gaskets ref. 25D263









CODE	DESCRIPTION
GX68200	Displacement pump compatible with Xtreme 180cc Rif. L180C1
RX68200	Pump repair kit Xtreme 180cc complete with spheres and gaskets ref. 25D262

PUMPING AND KIT VALSPRAY

CODE	DESCRIPTION
H23200	Stainless steel displacement pump for 23:1
R23200	Pump repair kit for 231 complete with spheres and gaskets

CAMPATIBLE: GRACO MONARK 23:1 - LARIUS VEGA 23:1 - MAVES K25

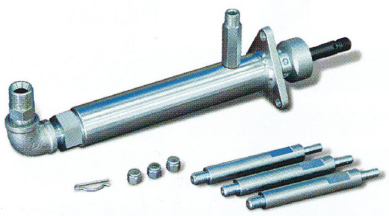



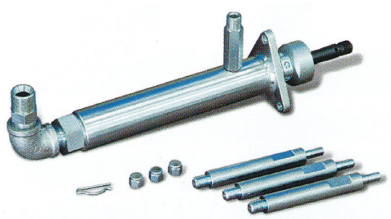



CODE	DESCRIPTION
H28200	Stainless steel displacement pump for PRO 301 FE
R28200	Pump repair kit for 301 complete with spheres and gaskets

COMPATIBLE: GRACO PRESIDENT 30:1 - GHIBLI 30:1 - MAVES K30

CODE	DESCRIPTION
H28S200	Stainless steel displacement pump FOR PRO WIN 281
R28S200	Pump repair kit for 281 complete with spheres and gaskets

COMPATIBLE: GRACO PRESIDENT 30:1 INOX
GHIBLI 30:1 INOX - MAVES K30 INOX

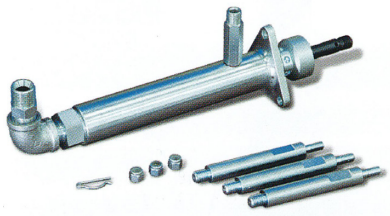



PUMPING AND REPAIR KIT VAL SPRAY

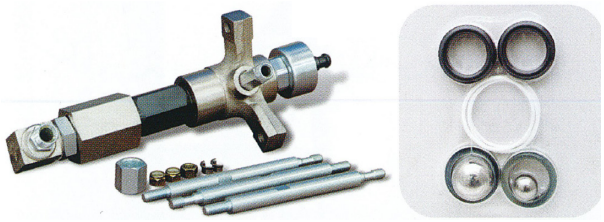

CODE	DESCRIPTION
H68200	Displacement pump for pump 68:1
R68200	Pump repair kit for 681 complete with spheres and seals

COMPATIBLE: HANDOK 68:1 - BULLDOG 41:1 - BULLDOG 33:1

CODE	DESCRIPTION
H68S200	Stainless steel displacement pump for PRO TEC 681
R68S200	Pump repair kit for 681 in stainless steel complete with spheres and seals

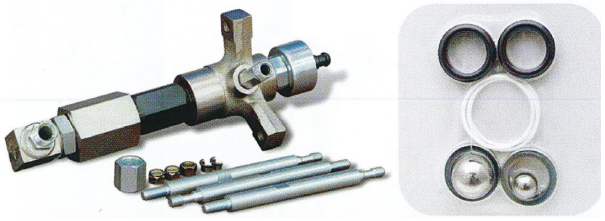

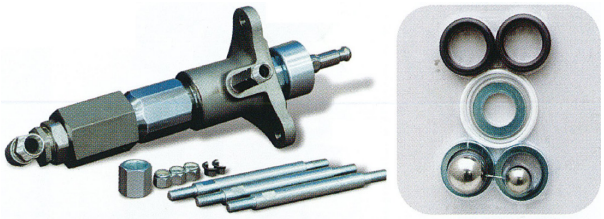

CODE	DESCRIPTION
H63D200	Displacement pump for pump PRO MAX H72
R63D200	Pump repair kit for 731 complete with spheres and seals
H45D200	Displacement pump for pump PRO MAX H56
R45D200	Pump repair kit for 561 complete with spheres and seals
H45S200	Stainless steel displacement pump for pump PRO TEC 451 - PRO MAX H56 INOX
R45S200	Pump repair kit for 451 and 561 in stainless steel complete with spheres and seals

CODE	DESCRIPTION
H63200	Displacement pump for pump PRO 631 FE
R63S200	Pump repair kit for 631 INOX complete with spheres and seals

COMPATIBLE: GRACO 63:1 - LARIUS NOVA 60:1

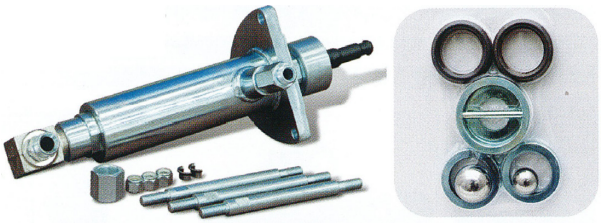

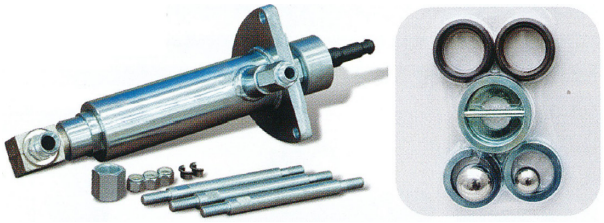

CODE	DESCRIPTION
H45200	Displacement pump for pump PRO 451 FE
R45200	Pump repair kit for 451 complete with spheres and seals

COMPATIBLE: GRACO 45:1 - LARIUS NOVA 45:1

AIR MOTOR KIT VAL SPRAY



CODE	DESCRIPTION
R281100-W	Pneumatic motor repair kit Nare 28100-W Compatible with PRO 301 FE - PRO WIN 281 - Graco President

CODE	DESCRIPTION
R45100	Pneumatic motor repair kit Nuri 45100 Compatible with PRO 451 FE - PRO TEC 451 - PRO 631 FE - Graco King

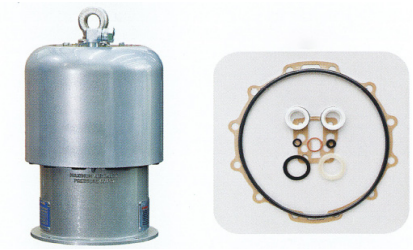



CODE	DESCRIPTION
R68100	Pneumatic motor repair kit Mir 68100 Compatible with PRO 681 FE - PRO TEC 681 - Graco Quite King

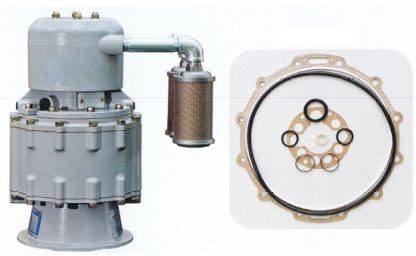

CODE	DESCRIPTION
R72100	Pneumatic motor repair kit 72100 Compatible with PRO MAX H56 - PRO MAX H72

PISTONS GRINDING

Thanks to a specialized center, our company offers a piston grinding and chrome plating service for all models and brands.



CODE	DESCRIPTION
RCPG	Large piston grinding and chrome plating
RCPM	Medium piston grinding and chrome plating
RCPP	Small piston grinding and chrome plating

MAINTENANCE ACCESSORIES

CODE	DESCRIPTION
TTL001	Trilube lubrificant for airless machine's piston 236 ml
TTT001	Tritector cleans lubricates and protects the equipment 946 ml





CODE	DESCRIPTION
867670	Throat Seal lubrificant for airless machine's piston 0.2 lt
865714	Pump conditioner prevents internal corrosion, lubricates the spheres and protects equipment 1 lt

CODE	DESCRIPTION
601000	Hydraulic oil iso 46 lt.1
601001	Diathermic oil for solvent regenerators
10W40	Motor oil



SPARE PARTS FOR HP MEMBRANE PUMPS



CODE	DESCRIPTION
400080	Suction valve assembly 80 mm

CODE	REF.	DESCRIPTION
400083	1	Conical stem valve
400084	2	Stem valve guide
400088	3	Seal sleeve
400086	4	Spring with nut and washer
400089	5	Washer seal
408081	1+2+4	Kit otturatore conico

CODE	DESCRIPTION
400004	Compression valve

CODE	REF.	DESCRIPTION
400446	1	Copper gasket for cap
400442	2	Copper gasket for cap
400443	3	Sphere spring
400444	4	Sphere TC 11mm
400445	5	Sphere seat gasket
400441	6	Stainless steel cap
400447	7	Support gasket





CODE	DESCRIPTION
040300	Membrane kit VS 4500 - 6000
041000	Membrane kit VS 10000 - 20000
050353	Membrane spacer VS 4500 - 6000
050017	Membrane spacer VS 10000 - 20000
045000	Membrane type Tecnover 5000
043000	Membrane type Larius 3000
4030	Membrane kit type Tecnover 4000 - K300

CODE	DESCRIPTION
400005	Pressure regulating valve Val Spray
400300	Pressure relief valve
400006	O-ring

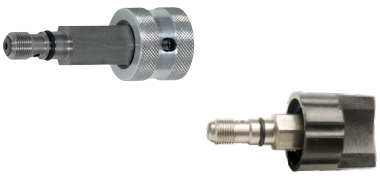



CODE	DESCRIPTION
400800	Stroke compensator kit with pressure gauge 0-400 bar
400801	Stroke compensator F 18x1.5
151416	Nipple M 1/4” x M 18x1.5
400802	4-way junction FFFF 1/4”
400810	3-way junction for pressure gauge FM 1/4” AVP
401810	3-way junction for pressure gauge FM 1/4” Stainless steel
400811	3-way junction for pressure gauge F 1/4” M 16x1,5

HIGH PRESSURE VALVES



CODE	DESCRIPTION
023010	High pressure valve BIG FF 1/4”
023011	High pressure valve BIG HA with nipples M 1/4” x M 20x2
023015	High pressure valve BIG FF 3/8”
023015A	High pressure valve BIG FF 1/2”
023015B	High pressure valve BIG FF 3/4”
023015C	High pressure valve BIG FF 1”

CODE	DESCRIPTION
023010A	High pressure valve BIG FF 1/4” stainless steel
023010B	High pressure valve BIG FF 3/8” stainless steel
023010C	High pressure valve BIG FF 1/2” stainless steel
023010D	High pressure valve BIG FF 3/4” stainless steel
023010E	High pressure valve BIG FF 1” stainless steel

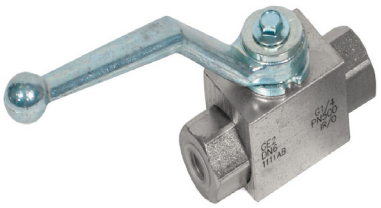



CODE	DESCRIPTION
023025	3-way high pressure valve BIG FFF 1/4”
023030	3-way high pressure valve BIG FFF 3/8”
023025A	3-way high pressure valve BIG FFF 1/2”
023025B	3-way high pressure valve BIG FFF 3/4”
023025C	3-way high pressure valve BIG FFF 1”

CODE	DESCRIPTION
023030A	3-way high pressure valve BIG FFF 1/4” stainless steel
023030B	3-way high pressure valve BIG FFF 3/8” stainless steel
023030C	3-way high pressure valve BIG FFF 1/2” stainless steel
023030D	3-way high pressure valve BIG FFF 3/4” stainless steel
023030E	3-way high pressure valve BIG FFF 1” stainless steel





CODE	DESCRIPTION
023005	Mini high pressure valve FF 1/4”
023006	Mini high pressure valve with nipples M 1/4” x M 20x2

CODE	DESCRIPTION
023050	Mini high pressure valve FF 1/4” stainless steel
023050F	Mini high pressure valve with nipples M 1/4” x M 20x2 stainless steel





CODE	DESCRIPTION
120114	Needle flow regulation high pressure valve 400 Bar FF 1/4”
120138	Needle flow regulation high pressure valve 400 Bar FF 3/8’’

NON-RETURN VALVES



CODE	DESCRIPTION
R3V2B	3 way full bore diverter ball valve - threding FFF 1/4” with steel lever for VS 2B

CODE	DESCRIPTION
127600102	L-shaped 3-way 1/2” ball valve with aluminum lever
127600304	L-shaped 3-way 3/4” ball valve with aluminum handle

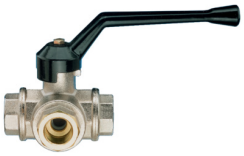



CODE	DESCRIPTION
383114	Mini low pressure ball valve FM 1/4”
383214	Mini low pressure ball valve FF 1/4”

CODE	DESCRIPTION
383014	Ball valve with low pressure lever FF 1/4”
383314	Ball valve with low pressure butterfly FF 1/4”
383038	Ball valve with low pressure lever FF 3/8”
383338	Ball valve with low pressure butterfly FF 3/8”
383012	Ball valve with low pressure lever FF 1/2”
383034	Ball valve with low pressure lever FF 3/4”
383100	Ball valve with low pressure lever FF 1”
383141	Ball valve with low pressure lever FF 1 1/4”



NON-RETURN VALVES



CODE	DESCRIPTION
383518	Stainless steel medium pressure check valve F 1/8"
383514	Stainless steel medium pressure check valve F 1/4"
383538	Stainless steel medium pressure check valve F 3/8"
383512	Stainless steel medium pressure check valve F 1/2"
383534	Stainless steel medium pressure check valve F 3/4"

NON-RETURN VALVE



CODE	DESCRIPTION
383714	High pressure non-return valve F 1/4"
383738	High pressure non-return valve F 3/8"
3837381/2	High pressure non-return valve F 1/2"
3837383/4	High pressure non-return valve F 3/4"
383738/1	High pressure non-return valve F 1"
383814	High pressure non-return valve F 1/4" S. steel
383838	High pressure non-return valve F 3/8" S. steel
3838381/2	High pressure non-return valve F 1/2" S. steel
3838383/4	VHigh pressure non-return valve F 3/4" S. steel
383838/1	High pressure non-return valve F 1" S. steel

CODE	DESCRIPTION
FB1/4001	Inspectable high pressure non-return valve M 1/4"
30200	Inspectable high pressure non-return valve M 3/8”
FB1/2003	Inspectable high pressure non-return valve M 1/2”

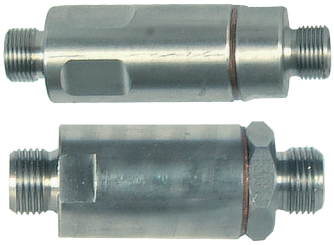

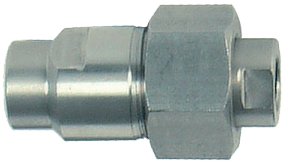

CODE	DESCRIPTION
FBL1/4000	Inspectable high pressure non-return valve F 1/4”
FBL3/8000	Inspectable high pressure non-return valve F 3/8”

SWIVEL FITTING

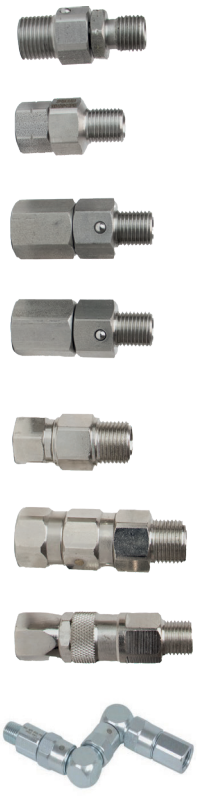

CODE	DESCRIPTION
107000HT	Swivel fitting M 1/4” NPS x M 14x1mm - L45mm
107001HT	Swivel fitting M 3/8” NPS x M 14x1mm - L46mm
107002HT	Swivel fitting M 16X1.5 NPS x M 14x1mm - L46mm
109030	Swivel fitting M 1/4” BPS x M 14x1mm - L45mm
109023	Swivel fitting M 16x1,5mm x M 14x1mm - L47mm
107009HT	Swivel fitting M 1/4” BSP x F 1/4” BSP - L37mm
107012HT	Swivel fitting M 1/4” NPT x F 1/4” NPT - L37mm
107013HT	Swivel fitting M 1/4” BSP x F 1/4” NPS - L37mm
10700GU	PTFE conical gasket for swivel fitting 1090XX
HD0200	Swivel fitting M 1/4” BSP x F 1/4” BSP
HD0200-N	Swivel fitting M 1/4” NPS x F 1/4” BSP
HD020038	Swivel fitting M 3/8” BSP x F 3/8” BSP
HD020038-N	Swivel fitting M 3/8” NPS x F 3/8” BSP
HD021438	Swivel fitting M 1/4” BSP x F 3/8” BSP
HD10200	Long swivel fitting M 1/4” BSP x F 1/4” BSP ø5mm
HD1020038	Long swivel fitting M 3/8” BSP x F 3/8” BSP ø5mm
HDZ014	Z swivel fitting M 1/4” BSP x F 1/4” BSP
HDZ038	Z swivel fitting M 3/8” BSP x F 3/8” BSP

HEADS FOR AIRLESS MEMBRANE PUMPS



CODE	DESCRIPTION
4524	Head type VS 4500 - 6000

CODE	DESCRIPTION
AS00BZZ1	Head type Asturo K500 in stainless steel
AS00BZZ2	Head type Asturo K1000 in stainless steel
AS00BAZ1	Head type Asturo K500 in aluminium
AS00BAZ2	Head type Asturo K1000 in aluminium







CODE	DESCRIPTION
10024S	Head type VS 10000 Vertical

COMPATIBILE WITH PUMPS:
TECNOVER SUPERDIECIMILA - SUPER QUINDICIMILA
MECART VERTIGO V10000

CODE	DESCRIPTION
10024SL	Head type VS 10000 Horizontal

COMPATIBILE WITH PUMPS:
TECNOVER SUPERDIECIMILA - SUPER QUINDICIMILA LATERALE
MECART AURORA SS10000





CODE	DESCRIPTION
80024	Head type Larius Giotto 8000

CODE	DESCRIPTION
70024	Head type Sinaer 7000 - 10000

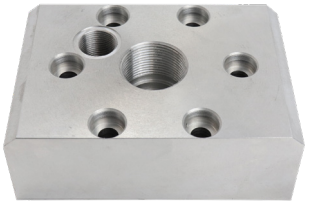

PRESSURE GAUGES FOR LIQUID



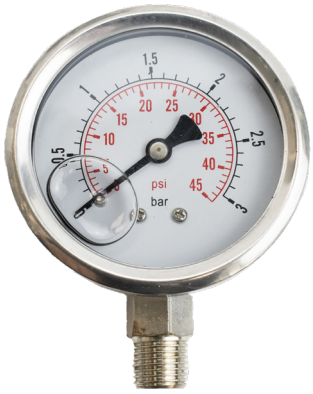









CODE	RANGE (BAR)	DESCRIPTION	FITTING	Ø
M001D63R14P	0-1	Glycerine filled pressure gauge with radial connection	1/4”	63 MM
M025D63R14P	0-2,5	Glycerine filled pressure gauge with radial connection	1/4”	63 MM
M003D68R14P	0-3	Glycerine filled pressure gauge with radial connection	1/4”	68 MM
400961	0-6	Glycerine filled pressure gauge with radial connection	1/4”	68 MM
M016D65R14P	0-16	Glycerine filled pressure gauge with radial connection	1/4”	63 MM
M020D68R14P	0-20	Glycerine filled pressure gauge with radial connection	1/4”	68 MM
M050D68R14P	0-50	Glycerine filled pressure gauge with radial connection	1/4”	68 MM
M060D65R14P	0-60	Glycerine filled pressure gauge with radial connection	1/4”	63 MM
M100D63R14P	0-100	Glycerine filled pressure gauge with radial connection	1/4”	63 MM
13002P	0-400	Flanged glycerine pressure gauge with back connection	1/4”	85 MM
130001	0-400	Glycerine filled pressure gauge with radial connection	1/4”	68 MM
130002	0-400	Glycerine filled pressure gauge with back connection	1/4”	68 MM

AIR PRESSURE GAUGES













CODE	RANGE (BAR)	DESCRIPTION	FITTING	Ø
M025D50P18P	0-2,5	Plastic air pressure gauge with back connection	1/8”	50 мм
M004D63R14R	0-4	Plastic air pressure gauge with radial connection	1/4”	63 мм
M004D50P18P	0-4	Plastic air pressure gauge with back connection	1/8”	50 мм
M006D63R14R	0-6	Plastic air pressure gauge with radial connection	1/4”	63 мм
M007D40R18R	0-7	Plastic air pressure gauge with radial connection	1/8”	40 мм
212484	0-12	Glass air pressure gauge with back connection	1/8”	50 мм

TANKS AND SIEVES





CODE	DESCRIPTION
521000	Stainless steel tank 25 lt F 1"
521001	Stainless steel tank 25 lt F 36x2
521003	Nylon tank 35 lt M 2”
52103G	Adapter M 2” F36x2 + Filter + Gasket

CODE	DESCRIPTION
520009	Nylon tank 6 lt F 1”
520001	Nylon tank 6 lt F 36x2
520011	Black nylon tank 6 lt F 36x2 for UV paint
SLV4004	Bent return pipe for low pressure return hose 6x8





CODE	DESCRIPTION
520003	Nylon tank kit 6 lt for pump VS 36/50 - Complete with tank, cover, return hose and L-adapter FS 1/2” in iron
520005	Nylon tank kit 6 lt for pump VS 25 - Complete with tank, cover, return hose and L-adapter FS 3/4” in stainless steel
520001RTBP	Nylon tank kit 6 lt for pump VS K1 - Complete with tank, cover and return hose pipe with low pressure hose

CODE	DESCRIPTION
520001RT	Nylon tank kit 6 lt for pump - Complete with tank, cover and high pressure return hose 20x2
520001RTA	Nylon tank kit 6 lt for pump - Complete with tank, cover, high pressure return hose 20x2 and U-adapter FS 36x2 x M 36x2 in stainless steel





CODE	DESCRIPTION
520002	Nylon tank 2 lt F 3/8"
520007	Nylon tank 2 lt F 1/2"
520002LL	Nylon tank 3 lt F 1"
520007LL	Nylon tank 3 lt F 36 x 2

CODE	DESCRIPTION
23006	Can sieve 30 M
23008	Can sieve 60 M
SL4002	Support for tank filters 6 lt
SL4003	Filter 210 micron for 6 lt tank (pkg 5 pcs)





ADAPTORS AND LOW PRESSURE VALVES

CODE	DESCRIPTION
47500	Aluminium reduction F 1/2” x M 36x2
47600	Aluminium reduction F 3/4” x M 36x2
47700	Aluminium reduction F 1” x M 36x2
47800	Aluminium reduction F 28x1.5 x M 1/2”
47900	Stainless steel reduction Larius type F 22x3 x M 36x2
365001	Stainless steel reduction F 15x1 x M 28x1.5
365002	Stainless steel reduction F 1/2” x M 28x1.5
365003	Stainless steel reduction F 1” x M 28x1.5
365004	Stainless steel reduction F 3/4” x M 28x1.5
365005	Stainless steel reduction F 28x1.5 x M 1/2”
365006	Stainless steel reduction F 18x1.25 x M 1/2”
365007	Stainless steel reduction F 36x2 x M 3/4”
365008	Stainless steel reduction F 1/2" x M 1”





CODE	DESCRIPTION
021030	Iron L-adapter FS 1/2” x M 36x2
021040	Stainless steel L-adapter FS 36x2 x M 36x2
021045	Stainless steel L-adapter FS 1/2” x M 36x2
021050	Stainless steel L-adapter FS 3/4” x M 36x2
021060	Stainless steel L-adapter FS 26x1.25 x M 36x2

CODE	DESCRIPTION
021055	Stainless steel U-adapter FS 3/4” x M 36x2
021057	Stainless steel U-adapter FS 36x2 x M 36x2
021058	Stainless steel U-adapter FS 1/2” x M 36x2
021056	Stainless steel U-adapter FG 26x1.25 x M 36x2

CODE	DESCRIPTION
FB400088C	Short sleeve seal





CODE	DESCRIPTION
355606	Reduction for 1000 L F S60x6 x F 2” aluminium tank

CARTS





CODE	DESCRIPTION
30800	Cart complete with wheels for VTN - S
CRF05	Plate for VTN - S cart or wall fixing
CRE25	Cart woth wheels for S-ECO25
25502C	Cart complete with wheel for VS 24 - 25 - 36 - 50
25502P	Plate for VS 24 - 25 - 36 - 50 cart
CRS05	Stool trolley with 4 feet and plate





CODE	DESCRIPTION
212472	Wheel for VS 24 - 25 - 36 - 50 cart
TNCRF02	Wheel for VTN - S cart
757558	Pneumatic wheel for VS 4500 - 6000 - 10000 cart
021051	Rotating wheel for VS 4500 - 6000 - 10000 cart

HIGH PRESSURE HOSES

SINGLE METALLIC BRAID HOSE



CODE	HOSE DIAMETER	WORKING PRESSURE	BURST PRESSURE
616000	3/16”	350 bar	467 bar
614000	1/4”	300 bar	400 bar
638000	3/8”	225 bar	300 bar
612000	1/2”	190 bar	254 bar

DOUBLE METALLIC BRAID HOSE



CODE	HOSE DIAMETER	WORKING PRESSURE	BURST PRESSURE
814000	1/4”	400 bar	534 bar
838000	3/8”	330 bar	440 bar

POSSIBILITY TO REQUEST YELLOW OR BLUE

SINGLE TEXTILE BRAID HOSE

CODE	HOSE DIAMETER	WORKING PRESSURE	BURST PRESSURE
71400316	3/16”	210 bar	300 bar
714000	1/4”	200 bar	225 bar
738000	3/8”	175 bar	200 bar
712000	1/2”	140 bar	180 bar





SINGLE TEXTILE BRAID HOSE TYPE GRACO FOR AIRLESS PUMPS 15 MT

CODE	HOSE DIAMETER	WORKING PRESSURE	BURST PRESSURE
914154	1/4”	225 bar	250 bar
938158	3/8”	225 bar	250 bar

SINGLE TEXTILE BRAID GRACO HOSE FOR AIRLESS PUMPS 15 MT

CODE	HOSE DIAMETER	WORKING PRESSURE	BURST PRESSURE
865674	1/4”	200 bar	230 bar
865675	3/8”	200 bar	230 bar



DOUBLE STAINLESS STEEL BRAID HOSE WITH PTFE INTERIOR



CODE	HOSE DIAMETER	WORKING PRESSURE	BURST PRESSURE
5316000	3/16”	365 bar	1250 bar
514000	1/4”	365 bar	1100 bar
538000	3/8”	285 bar	850 bar
512000T	1/2”	280 bar	750 bar
534000T	3/4”	200 bar	600 bar

SINGLE METALLIC BRAID FITTED HOSES

CODE	Ø TUBE	FITTING	LENGHT
616000	HA 3/16"		per meter
616054	HA 3/16"	FG 1/4"	mt. 5
616754	HA 3/16"	FG 1/4"	mt. 7,5
616104	HA 3/16"	FG 1/4"	mt. 10
616154	HA 3/16"	FG 1/4"	mt. 15
616204	HA 3/16"	FG 1/4"	mt. 20
616055	HA 3/16"	FG 16x1,5	mt. 5 type Wagner
616755	HA 3/16"	FG 16x1,5	mt. 7,5 type Wagner
616105	HA 3/16"	FG 16x1,5	mt. 10 type Wagner
616155	HA 3/16"	FG 16x1,5	mt. 15 type Wagner
616205	HA 3/16"	FG 16x1,5	mt. 20 type Wagner
614000	HA 1/4"		per meter
614054	HA 1/4"	FG 1/4"	mt. 5
614754	HA 1/4"	FG 1/4"	mt. 7,5
614104	HA 1/4"	FG 1/4"	mt. 10
614154	HA 1/4"	FG 1/4"	mt. 15
614204	HA 1/4"	FG 1/4"	mt. 20
614055	HA 1/4"	FG 16x1,5	mt. 5 type Wagner
614755	HA 1/4"	FG 16x1,5	mt. 7,5 typeWagner
614105	HA 1/4"	FG 16x1,5	mt. 10 typeWagner
614155	HA 1/4"	FG 16x1,5	mt. 15 type Wagner
614205	HA 1/4"	FG 16x1,5	mt. 20 type Wagner
614058	HA 1/4"	FG 3/8"	mt. 5
614758	HA 1/4"	FG 3/8"	mt. 7,5
614108	HA 1/4"	FG 3/8"	mt. 10
614158	HA 1/4"	FG 3/8"	mt. 15
614208	HA 1/4"	FG 3/8"	mt. 20
638000	HA 3/8"		x meter
638055	HA 3/8"	FG 16x1,5	mt. 5 type Wagner
638755	HA 3/8"	FG 16x1,5	mt. 7,5 type Wagner
638105	HA 3/8"	FG 16x1,5	mt. 10 type Wagner
638155	HA 3/8"	FG 16x1,5	mt. 15 type Wagner
638205	HA 3/8"	FG 16x1,5	mt. 20 type Wagner
638058	HA 3/8"	FG 3/8"	mt. 5
638758	HA 3/8"	FG 3/8"	mt. 7,5
638108	HA 3/8"	FG 3/8"	mt. 10
638158	HA 3/8"	FG 3/8"	mt. 15
638208	HA 3/8"	FG 3/8"	mt. 20

AVP FITTING

FITTINGS AVAILABILITY:
NPT - NPS - JIC



STANDARD HOSE

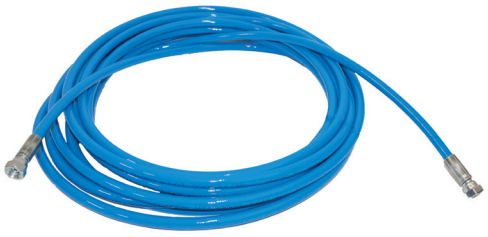

TUBE WITH BLUE COLOUR ON REQUEST

HIGH PRESSURE HOSE TYPE KREMLIN FITTED 1/2" JIC

CODE	Ø HOSE	FITTING	LENGHT
638055JIC	HA 3/16"	FG 1/2" JIC	mt. 5
638755JIC	HA 3/16"	FG 1/2" JIC	mt. 7,5
638105JIC	HA 3/16"	FG 1/2" JIC	mt. 10
638155JIC	HA 3/16"	FG 1/2" JIC	mt. 15
638205JIC	HA 3/16"	FG 1/2" JIC	mt. 20
638058JIC	HA 1/4"	FG 1/2" JIC	mt. 5
638758JIC	HA 1/4"	FG 1/2" JIC	mt. 7,5
638108JIC	HA 1/4"	FG 1/2" JIC	mt. 10
638158JIC	HA 1/4"	FG 1/2" JIC	mt. 15
638208JIC	HA 1/4"	FG 1/2" JIC	mt. 20

SINGLE METALLIC BRAID FITTED HOSES

INOX FITTING

CODE	Ø HOSE	FITTING	LENGHT
616000	HA 3/16"		per meter
616054i	HA 3/16"	FG 1/4"	mt. 5
616754i	HA 3/16"	FG 1/4"	mt. 7,5
616104i	HA 3/16"	FG 1/4"	mt. 10
616154i	HA 3/16"	FG 1/4"	mt. 15
616204i	HA 3/16"	FG 1/4"	mt. 20
616055i	HA 3/16"	FG 16x1,5	mt. 5 type Wagner
616755i	HA 3/16"	FG 16x1,5	mt. 7,5 type Wagner
616105i	HA 3/16"	FG 16x1,5	mt. 10 type Wagner
616155i	HA 3/16"	FG 16x1,5	mt. 15 type Wagner
616205i	HA 3/16"	FG 16x1,5	mt. 20 type Wagner
614000	HA 1/4"		per meter
614054i	HA 1/4"	FG 1/4"	mt. 5
614754i	HA 1/4"	FG 1/4"	mt. 7,5
614104i	HA 1/4"	FG 1/4"	mt. 10
614154i	HA 1/4"	FG 1/4"	mt. 15
614204i	HA 1/4"	FG 1/4"	mt. 20
614055i	HA 1/4"	FG 16x1,5	mt. 5 type Wagner
614755i	HA 1/4"	FG 16x1,5	mt. 7,5 type Wagner
614105i	HA 1/4"	FG 16x1,5	mt. 10 type Wagner
614155i	HA 1/4"	FG 16x1,5	mt. 15 typeWagner
614205i	HA 1/4"	FG 16x1,5	mt. 20 type Wagner
614058i	HA 1/4"	FG 3/8"	mt. 5
614758i	HA 1/4"	FG 3/8"	mt. 7,5
614108i	HA 1/4"	FG 3/8"	mt. 10
614158i	HA 1/4"	FG 3/8"	mt. 15
614208i	HA 1/4"	FG 3/8"	mt. 20
638000	HA 3/8"		per meter
638055i	HA 3/8"	FG 16x1,5	mt. 5 type Wagner
638755i	HA 3/8"	FG 16x1,5	mt. 7,5 type Wagner
638105i	HA 3/8"	FG 16x1,5	mt. 10 type Wagner
638155i	HA 3/8"	FG 16x1,5	mt. 15 type Wagner
638205i	HA 3/8"	FG 16x1,5	mt. 20 type Wagner
638058i	HA 3/8"	FG 3/8"	mt. 5
638758i	HA 3/8"	FG 3/8"	mt. 7,5
638108i	HA 3/8"	FG 3/8"	mt. 10
638158i	HA 3/8"	FG 3/8"	mt. 15
638208i	HA 3/8"	FG 3/8"	mt. 20

FITTING AVAILABILITY:
NPT - NPS - JIC



STANDARD HOSE



TUBE WITH BLUE COLOUR ON REQUEST

High pressure tube fitting Kremlin type 1/2 Jic

Code	Ø TUBO	RACCORDI	LUNGHEZZA
638055JICi	HA 3/16"	FG 1/2" JIC	mt. 5
638755JICi	HA 3/16"	FG 1/2" JIC	mt. 7,5
638105JICi	HA 3/16"	FG 1/2" JIC	mt. 10
638155JICi	HA 3/16"	FG 1/2" JIC	mt. 15
638205JICi	HA 3/16"	FG 1/2" JIC	mt. 20
638058JICi	HA 1/4"	FG 1/2" JIC	mt. 5
638758JICi	HA 1/4"	FG 1/2" JIC	mt. 7,5
638108JICi	HA 1/4"	FG 1/2" JIC	mt. 10
638158JICi	HA 1/4"	FG 1/2" JIC	mt. 15
638208JICi	HA 1/4"	FG 1/2" JIC	mt. 20

DOUBLE METALLIC BRAID FITTED HOSES

FITTING IN AVP

CODE	Ø HOSE	FITTING	LENGHT
814000	HA 1/4"		per meter
814054	HA 1/4"	FG 1/4"	mt. 5
814754	HA 1/4"	FG 1/4"	mt. 7,5
814104	HA 1/4"	FG 1/4"	mt. 10
814154	HA 1/4"	FG 1/4"	mt. 15
814204	HA 1/4"	FG 1/4"	mt. 20
814055	HA 1/4"	FG 16x1,5	mt. 5
814755	HA 1/4"	FG 16x1,5	mt. 7,5
814105	HA 1/4"	FG 16x1,5	mt. 10
814155	HA 1/4"	FG 16x1,5	mt. 15
814205	HA 1/4"	FG 16x1,5	mt. 20
814058	HA 1/4"	FG 3/8"	mt. 5
814758	HA 1/4"	FG 3/8"	mt. 7,5
814108	HA 1/4"	FG 3/8"	mt. 10
814158	HA 1/4"	FG 3/8"	mt. 15
814208	HA 1/4"	FG 3/8"	mt. 20
838000	HA 3/8"		per meter
838055	HA 3/8"	FG 16x1,5	mt. 5
838755	HA 3/8"	FG 16x1,5	mt. 7,5
838105	HA 3/8"	FG 16x1,5	mt. 10
838155	HA 3/8"	FG 16x1,5	mt. 15
838205	HA 3/8"	FG 16x1,5	mt. 20
838058	HA 3/8"	FG 3/8"	mt. 5
838758	HA 3/8"	FG 3/8"	mt. 7,5
838108	HA 3/8"	FG 3/8"	mt. 10
838158	HA 3/8"	FG 3/8"	mt. 15
838208	HA 3/8"	FG 3/8"	mt. 20

FITTING RANGE:
NPT - NPS - JIC

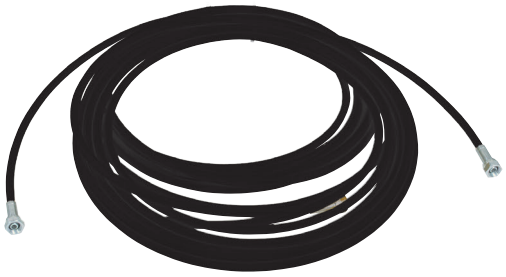



CODE	DESCRIPTION
HS23GUAI-4A	SHEATH Ø 40
HS23GUAI-5A	Sheath Ø 55
HS23GUAI-6A	Sheath Ø 65
HS23GUAI-9A	Sheath Ø 90

SINGLE TEXTILE BRAID FITTED HOSES

CODE	ø HOSE	FITTING	LENGHT
71400316	HA3/16"		per meter
714316	HA 3/16"	FG 1/4"	mt. 5
714317	HA 3/16"	FG 1/4"	mt. 7,5
714318	HA 3/16"	FG 1/4"	mt. 10
714319	HA 3/16"	FG 1/4"	mt. 15
714320	HA 3/16"	FG 1/4"	mt. 20
714000	HA 1/4"		per meter
714054	HA 1/4"	FG 1/4"	mt. 5
714754	HA 1/4"	FG 1/4"	mt. 7,5
714104	HA 1/4"	FG 1/4"	mt. 10
714154	HA 1/4"	FG 1/4"	mt. 15
714204	HA 1/4"	FG 1/4"	mt. 20
714055	HA 1/4"	FG 16x1,5	mt. 5
714755	HA 1/4"	FG 16x1,5	mt. 7,5
714105	HA 1/4"	FG 16x1,5	mt. 10
714155	HA 1/4"	FG 16x1,5	mt. 15
714205	HA 1/4"	FG 16x1,5	mt. 20
714058	HA 1/4"	FG 3/8"	mt. 5
714758	HA 1/4"	FG 3/8"	mt. 7,5
714108	HA 1/4"	FG 3/8"	mt. 10
714158	HA 1/4"	FG 3/8"	mt. 15
714208	HA 1/4"	FG 3/8"	mt. 20
738000	HA 3/8"		per meter
738055	HA 3/8"	FG 16x1,5	mt. 5
738755	HA 3/8"	FG 16x1,5	mt. 7,5
738105	HA 3/8"	FG 16x1,5	mt. 10
738155	HA 3/8"	FG 16x1,5	mt. 15
738205	HA 3/8"	FG 16x1,5	mt. 20
738058	HA 3/8"	FG 3/8"	mt. 5
738758	HA 3/8"	FG 3/8"	mt. 7,5
738108	HA 3/8"	FG 3/8"	mt. 10
738158	HA 3/8"	FG 3/8"	mt. 15
738208	HA 3/8"	FG 3/8"	mt. 20

NON-CONDUCTIVE

FITTING IN
STAINLESS STEEL

FITTING RANGE:
NPT - NPS - JIC





HIGH PRESSURE HOSE GRACO TYPE
AMERICAN FITTING NPS

CODE	Ø TUBE	FITTING	LENGHT
638055N	HA 3/16"	FG 1/4" NPS	mt. 5
638105N	HA 3/16"	FG 1/4" NPS	mt. 10
638058N	HA 1/4"	FG 1/4" NPS	mt. 5
614104N	HA 1/4"	FG 1/4" NPS	mt. 10
614154N	HA 1/4"	FG 1/4" NPS	mt. 15
614204N	HA 1/4"	FG 1/4" NPS	mt. 20





SINGLE TEXTILE BRAID HOSE TYPE GRACO FOR AIRLESS PUMPS 15 MT

CODE	HOSE DIAMETER	WORKING PRESSURE	BURST PRESSURE
914154	1/4"	225 bar	250 bar
938158	3/8"	225 bar	250 bar

HOSES: LOW PRESSURE

RILSAN PA 12 HOSE



CODE	HOSE DIAMETER	WORKING PRESSURE	BURST PRESSURE
35024	2x4	44 bar	pressure
35046	4x6	27 bar	80 bar
35068	6x8	19 bar	57 bar
35810	8x10	15 bar	44 bar
35112	10x12	12 bar	36 bar
35114	12x14	22 bar	67 bar

RILSAN HOSE PA 12 BLACK FOR UV



CODE	HOSE DIAMETER	WORKING PRESSURE	BURST PRESSURE
35046N	4x6	27 bar	80 bar
35068N	6x8	19 bar	57 bar
35810N	8x10	15 bar	44 bar

TUBO POLIURETANICO PU SH 98

CODE	HOSE DIAMETER	WORKING PRESSURE	BURST PRESSURE
35024PU	2x4	44 bar	133 bar
35046PU	4x6	27 bar	80 bar
35068PU	6x8	19 bar	57 bar
35810PU	8x10	15 bar	44 bar
35112PU	10x12	12 bar	36 bar



RUBBER AIR HOSE



CODE	HOSE DIAMETER	WORKING PRESSURE	BURST PRESSURE
350106	6x14	20 bar	60 bar
350108	8x17	20 bar	60 bar
350113	13x23	20 bar	60 bar
350116	16x26	20 bar	60 bar
350119	19x30	20 bar	60 bar
350125	24x37	20 bar	60 bar
351125	25x39	25 bar	60 bar

PU BRAIDED AIR HOSE



CODE	HOSE DIAMETER	WORKING PRESSURE	BURST PRESSURE
340812	8x12	20 bar	60 bar
341015	10x15	20 bar	60 bar

ANTISOLVENT SUCTION HOSE

CODE	HOSE DIAMETER	WORKING PRESSURE	BURST PRESSURE
100013	13x23	10 bar	30 bar
100016	16x26	10 bar	30 bar
100019	19x29	10 bar	30 bar
100025	25x37	10 bar	30 bar



LOW PRESSURE HOSES

SOLVENT-RESISTANT RUBBER HOSE



CODE	HOSE DIAMETER	WORKING PRESSURE	BURST PRESSURE
810170	10x17	10 bar	30 bar

HOSE COMPLETE WITH FITTINGS

CODE	HOSE DIAMETER	FITTING	LENGHT
810177	10x17	FG 3/8”	mt. 7,5
180171	10x17	FG 3/8”	mt. 10
810175	10x17	FG 3/8”	mt. 15
810172	10x17	FG 3/8”	mt. 20

PTFE HOSE FOR ELECTROSTATIC SYSTEMS

CODE	HOSE DIAMETER	WORKING PRESSURE	BURST PRESSURE
VSZBT00TB8	4x8	35 bar	110 bar
VSZBT00TB3	5x9	31 bar	95 bar
VSZBT00TB2	6x8	28 bar	85 bar
VSZBT00TB1	6x10	28 bar	85 bar
VSZBT00TB9	8x10	28 bar	85 bar





OVERSIZED DOUBLE HOSE FOR WATER AND SOLVENT BASED PAINTS

CODE	HOSE DIAMETER	WORKING PRESSURE	BURST PRESSURE
816000	6.5x10 + 8x11	20 bar	50 bar

DOUBLE HOSE

CODE	HOSE DIAMETER	WORKING PRESSURE	BURST PRESSURE
886868	6x8	15 bar	30 bar
884646	4x6	15 bar	30 bar
884242	2x4	15 bar	30 bar



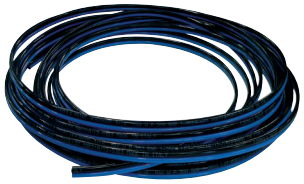

DOUBLE MIX HOSE

CODE	HOSE DIAMETER	WORKING PRESSURE	BURST PRESSURE
661000	3/16”	200 bar	267 bar
	5x8	10 bar	17 bar

BRAIDED PVC HOSE

CODE	HOSE DIAMETER	WORKING PRESSURE	BURST PRESSURE
DA12908	8x14	15 bar	45 bar
DA12910	10x16	15 bar	45 bar
DA12913	13x20	15 bar	45 bar
DA12919	19x26	10 bar	30 bar



DOUBLE FITTED HOSES

DOUBLE HOSE LOW PRESSURE

CODE	Ø TUBE	FITTING	LENGHT
886805	6x8	FG 1/4"	mt. 5
886875	6x8	FG 1/4"	mt. 7,5
886810	6x8	FG 1/4"	mt. 10
886815	6x8	FG 1/4"	mt. 15
886820	6x8	FG 1/4"	mt. 20
886805J	6x8	FG 1/2 Jic	mt. 5
886875J	6x8	FG 1/2 Jic	mt. 7,5
886810J	6x8	FG 1/2 Jic	mt. 10
886815J	6x8	FG 1/2 Jic	mt. 15
886820J	6x8	FG 1/2 Jic	mt. 20
883805	6x8	FG 3/8"	mt. 5
883875	6x8	FG 3/8"	mt. 7,5
883810	6x8	FG 3/8"	mt. 10
883815	6x8	FG 3/8"	mt. 15
883820	6x8	FG 3/8"	mt. 20





OVERSIZED DOUBLE HOSE FOR WATER AND SOLVENT BASED PAINTS

CODE	Ø TUBE	FITTING	LENGHT
816005	6.5x10 + 8x11	FG 3/8” + FG 1/4”	mt. 5
816075	6.5x10 + 8x11	FG 3/8” + FG 1/4”	mt. 7,5
816100	6.5x10 + 8x11	FG 3/8” + FG 1/4”	mt. 10
816150	6.5x10 + 8x11	FG 3/8” + FG 1/4”	mt. 15
816200	6.5x10 + 8x11	FG 3/8” + FG 1/4”	mt. 20

DOUBLE MIX FITTED HOSES



MIX HOSE

CODE	Ø TUBE	FITTING	LENGHT
661005	HA3/16”+BP6X8	FG 1/4”	mt. 5
661675	HA3/16”+BP6X8	FG 1/4”	mt. 7,5
661610	HA3/16”+BP6X8	FG 1/4”	mt. 10
661615	HA3/16”+BP6X8	FG 1/4”	mt. 15
661620	HA3/16”+BP6X8	FG 1/4”	mt. 20
661005J	HA3/16”+BP6X8	FG 1/2 Jic	mt. 5
661675J	HA3/16”+BP6X8	FG 1/2 Jic	mt. 7,5
661610J	HA3/16”+BP6X8	FG 1/2 Jic	mt. 10
661615J	HA3/16”+BP6X8	FG 1/2 Jic	mt. 15
661620J	HA3/16”+BP6X8	FG 1/2 Jic	mt. 20
661005W	HA3/16”+BP6X8	FG 16x1.5	mt. 5
661675W	HA3/16”+BP6X8	FG 16x1.5	mt. 7,5
661610W	HA3/16”+BP6X8	FG 16x1.5	mt. 10
661615W	HA3/16”+BP6X8	FG 16x1.5	mt. 15
661620W	HA3/16”+BP6X8	FG 16x1.5	mt. 20

LOW PRESSURE HOSES

RILSAN





POLYURETHANE





CODE	DESCRIPTION	LENGHT	MIN.LENGHT
356875	Spiral hose Rilsan inside ø 6 mm 7,5 mt. fitted	7.5	3.75
356810	Spiral hose Rilsan inside ø 6 mm 10 mt. fitted	10	5
356815	Spiral hose Rilsan inside ø 6 mm 15 mt. fitted	15	7.5
356830	Spiral hose Rilsan inside ø 6 mm 30 mt. fitted	30	15
366875	Polyurethane spiral hose inside ø 5,5 mm 7,5 mt. fitted	7.5	3.75
366810	Polyurethane spiral hose inside ø 5,5 mm 10 mt. fitted	10	5
366815	Rilsan spiral hose internal Ø 6 mm without fittings	15	7.5
366830	Spiral hose Rilsan inside ø 6 mm 30 mt. without fitting	30	15
355805	Polyurethane spiral hose internal Ø 5.5 mm with Italian coupling and tap	5	2.5
355875	Polyurethane spiral hose internal Ø 5.5 mm with Italian coupling and tap	7.5	3.75
355810	Polyurethane spiral hose internal Ø 5.5 mm with IT coupling and tap	10	5
365805	Polyurethane spiral hose internal Ø 5.5 mm without fittings	5	2.5
365875	Polyurethane spiral hose internal Ø 5.5 mm without fittings	7.5	3.75
365810	Polyurethane spiral hose internal Ø 5.5 mm without fittings	10	5







PU BRAIDED AIR HOSE

CODE	HOSE DIAMETER	WORKING PRESSURE	LENGTH
34081210	8x12	20 bar	10mt
34101520	10x15	20 bar	20mt
3408122	10x15	20 bar	10 mt
3410152	10x15	20 bar	20 mt

SUCTION SYSTEM ASSEMBLY: GALVANIZED

PAINT SUCTION SYSTEM WITH HOSE LENGHT 750 MM



CODE	DESCRIPTION
060012	Paint suction system with hose Ø 13 and suction M 15x1 FS 1/2”
060129	Paint suction system with hose Ø 13 and suction M 15x1 FS 1/2” 90°
060034	Paint suction system with hose Ø 13 and suction M 15x1 FS 3/4”
060349	Paint suction system with hose Ø 13 and suction M 15x1 FS 3/4” 90°
160362	Paint suction system with hose Ø 13 and suction M 15x1 FS 36x2
163629	Paint suction system with hose Ø 13 and suction M 15x1 FS 36x2 90°

CODE	DESCRIPTION
0603412	Paint suction system with hose Ø 19 and suction M 1/2” FS 3/4”
0634912	Paint suction system with hose Ø 19 and suction M 1/2” FS 3/4” 90°
0603612	Paint suction system with hose Ø 19 and suction M 1/2” FS 36x2
0636912	Paint suction system with hose Ø 19 and suction M 1/2” FS 36x2 90°

PAINT SUCTION SYSTEM WITH HOSE LENGHT 750 MM



DISPERSION SUCTION SYSTEM WITH HOSE LENGHT 750 MM



CODE	DESCRIPTION
070001	Dispersion suction system with hose Ø 25 and suction M 28x1,5 with nut FS 1”
070019	Dispersion suction system with hose Ø 25 and suction M 28x1,5 with nut FS 1” 90°
070362	Dispersion suction system with hose Ø 25 and suction M 28x1,5 with nut FS 36x2
073629	Dispersion suction system with hose Ø 25 and suction M 28x1,5 with nut FS 36x2 90° facing down
073629S	Dispersion suction system with hose Ø 25 and suction M 28x1,5 with nut FS 36x2 90° facing up

SYSTEM AND PUMP TABLE

CODE	PUMP
060012	BDP, VS 24, VS 36,VS 50
0603412	VS 25
060129	VS 2B
0636912	VTS 051, VTS 201, VTN 321, VTN 401, VTS 301/S
073629	VS 4500 - 6000 - 10000 Compact
070362	VS 10000 Eco
070001	PRO TEC 45 - 68

SUCTION SYSTEM ASSEMBLY: STAINLESS STEEL

STAINLESS STEEL PAINT SUCTION SYSTEM WITH HOSE LENGHT 750 MM



CODE	DESCRIPTION
080012	Stainless steel paint suction system with hose Ø 13 and suction M 15x1 FS 1/2”
080129	Stainless steel paint suction system with hose Ø 13 and suction M 15x1 FS 1/2” 90°
080034	Stainless steel paint suction system with hose Ø 13 and suction M 15x1 FS 3/4”
080349	Stainless steel paint suction system with hose Ø 13 and suction M 15x1 FS 3/4” 90°
180362	Stainless steel paint suction system with hose Ø 13 and suction M 15x1 FS 36x2
183629	Stainless steel paint suction system with hose Ø 13 and suction M 15x1 FS 36x2 90°

STAINLESS STEEL PAINT SUCTION SYSTEM WITH HOSE LENGHT 750 MM



CODE	DESCRIPTION
0803412	Stainless steel paint suction system with hose Ø 19 and suction M 1/2” FS 3/4”
0834912	Stainless steel paint suction system with hose Ø 19 and suction M 1/2” FS 3/4” 90°
0803612	Stainless steel paint suction system with hose Ø 19 and suction M 1/2” FS 36x2
0836912	Stainless steel paint suction system with hose Ø 19 and suction M 1/2” FS 36x2 90° facing down
0836912S	Stainless steel paint suction system with hose Ø 19 and suction M 1/2” FS 36x2 90° facing up

STAINLESS STEEL DISPERSION SUCTION SYSTEM WITH HOSE LENGHT 750 MM



CODE	DESCRIPTION
090001	Stainless steel dispersion suction system with hose Ø 25 and suction M 28x1,5 with nut FS 1”
090019	Stainless steel dispersion suction system with hose Ø 25 and suction M 28x1,5 with nut FS 1” 90°
090362	Stainless steel dispersion suction system with hose Ø 25 and suction M 28x1,5 with nut FS 36x2
093629	Stainless steel dispersion suction system with hose Ø 25 and suction M 28x1,5 with nut FS 36x2 90° facing down
093629S	Stainless steel dispersion suction system with hose Ø 25 and suction M 28x1,5 with nut FS 36x2 90° up

SYSTEM AND PUMP MATCHING TABLE

CODE	PUMP
080012	VS 36i
0836912	VTS 051, VTS 201, VTN 321, VTN 401, VTS 301/S

SUCTION HOSE: GALVANIZED

PAINT SUCTION PIPE Ø 13MM HOSE LENGHT 750 MM



CODE	DESCRIPTION
100012	Paint suction pipe with hose Ø 13 suction M 15x1 and nut FS 1/2”
100129	Paint suction pipe with hose Ø 13 suction M 15x1 and nut FS 1/2” 90°
100034	Paint suction pipe with hose Ø 13 suction M 15x1 and nut FS 3/4”
100349	Paint suction pipe with hose Ø 13 suction M 15x1 and nut FS 3/4” 90°
100362	Paint suction pipe with hose Ø 13 suction M 15x1 and nut FS 36x2
103629	Paint suction pipe with hose Ø 13 suction M 15x1 and nut FS 36x2 90°

PAINT SUCTION PIPE Ø 19MM HOSE LENGHT 750 MM



CODE	DESCRIPTION
1003412	Paint suction pipe with hose Ø 19 suction M 1/2” and nut FS 3/4”
1034912	Paint suction pipe with hose Ø 19 suction M 1/2” and nut FS 3/4” 90°
1003612	Paint suction pipe with hose Ø 19 suction M 1/2” and nut FS 36x2
1036912	Paint suction pipe with hose Ø 19 suction M 1/2” and nut FS 36x2 90° facing down
1036912S	Paint suction pipe with hose Ø 19 suction M 1/2” and nut FS 36x2 90° facing up

DISPERSION SUCTION PIPE Ø 25MM HOSE LENGHT 750 MM



CODE	DESCRIPTION
080001	Dispersion suction pipe with hose Ø 25 and suction M 28x1,5 with nut FS 1”
080019	Dispersion suction pipe with hose Ø 25 and suction M 28x1,5 with nut FS 1” 90°
080362	Dispersion suction pipe with hose Ø 25 and suction M 28x1,5 with nut FS 36x2
083629	Dispersion suction pipe with hose Ø 25 and suction M 28x1,5 with nut FS 36x2 90° facing down
083629S	Dispersion suction pipe with hose Ø 25 and suction M 28x1,5 with nut FS 36x2 90° facing up

TANK RETURN PIPE RETURN PIPE



CODE	DESCRIPTION
010202	Return hose high pressure
010209	Return hose high pressure 90° facing down
010209S	Return hose high pressure 90° facing up
010220	Tank return hose
010229	Tank return hose 90°

SUCTION HOSE: STAINLESS STEEL

STAINLESS STEEL PAINT SUCTION PIPE Ø 13MM HOSE LENGHT 750 MM



Code	Description
110012	Stainless steel paint suction pipe with hose Ø 13 suction M 15x1 and nut FS 1/2”
110129	Stainless steel paint suction pipe with hose Ø 13 suction M 15x1 and nut FS 1/2” 90°
110034	Stainless steel paint suction pipe with hose Ø 13 suction M 15x1 and nut FS 3/4”
110349	Stainless steel paint suction pipe with hose Ø 13 suction M 15x1 and nut FS 3/4” 90°
110362	Stainless steel paint suction pipe with hose Ø 13 suction M 15x1 and nut FS 36x2
113629	Stainless steel paint suction pipe with hose Ø 13 suction M 15x1 and nut FS 36x2 90°

STAINLESS STEEL PAINT SUCTION PIPE Ø 19MM HOSE LENGHT 750 MM



Code	Description
1103412	Stainless steel paint suction pipe with hose Ø 19 suction M 1/2” and nut FS 3/4”
1134912	Stainless steel paint suction pipe with hose Ø 19 suction M 1/2” and nut FS 3/4” 90°
1103612	Stainless steel paint suction pipe with hose Ø 19 suction M 1/2” and nut FS 36x2
1136912	Stainless steel paint suction pipe with hose Ø 19 suction M 1/2” and nut FS 36x2 90° down
1136912S	Stainless steel paint suction pipe with hose Ø 19 suction M 1/2” and nut FS 36x2 90° up

STAINLESS STEEL DISPERSION SUCTION PIPE Ø 25MM HOSE LENGHT 750 MM



Code	Description
060001i	Stainless steel dispersion suction pipe with hose Ø 25 and suction M 28x1,5 with nut FS 1”
060019i	Stainless steel dispersion suction pipe with hose Ø 25 and suction M 28x1,5 with nut FS 1” 90°
060362i	Stainless steel dispersion suction pipe with hose Ø 25 and suction M 28x1,5 with nut FS 36x2
063629i	Stainless steel dispersion suction pipe with hose Ø 25 and suction M 28x1,5 with nut FS 36x2 90° down
063629is	Stainless steel dispersion suction pipe with hose Ø 25 and suction M 28x1,5 with nut FS 36x2 90° up

STAINLESS STEEL RETURN HOSE



Code	Description
011202	Stainless steel return hose high pressure
011209	Stainless steel return hose high pressure 90°
011220	Stainless steel tank return hose
011229	Stainless steel tank return hose 90°

SUCTION HOSE: STAINLESS STEEL

STAINLESS STEEL DISPERSION SUCTION PIPE KREMLIN TYPE



CODE	DESCRIPTION
KN001VSBZ	Paint suction pipe KN M 1/2” - Lenght 900 Hose ø25 - mt.1,5 - F 38x150 Stainless steel
KN002VSBZ	Paint suction pipe KN M 1/2” - Lenght 500 Hose ø19 - mt.1 - F 26x125 Stainless steel
KN003VSBZ	Paint suction pipe KN M 1/2” - Lenght 900 Hose ø19 - mt.1 - F 26x125 Stainless steel
KN004VSBZ	Paint suction pipe KN M 1/2” - Lenght 500 Hose ø19 - mt.1 F 26x195 - 90° Stainless steel
KN005VSBZ	Paint suction pipe KN M 15x1.5 - Lenght 500 Hose ø13 - mt.1 - F 18x125 - Stainless steel

STAINLESS STEEL DISPERSION SUCTION SYSTEM Ø 25MM HOSE LENGHT 3000 MM

CODE	DESCRIPTION
0450362	Stainless steel dispersion suction system with hose 3000MM Ø 25 with suction pipe 900mm cut 45° for barrells M 28x1,5 and nut FG 36x2



FITTINGS FOR PTFE HOSES



FITTINGS FOR PTFE HOSE

CODE	DIAMETER	FITTING
VSZBT00TB4	6x10	M 1/4” 90°
VSZBT00TB5	6x10	M 1/4”
VSZBT00TB6	6x8	M 1/4”
VSZBT00TB7	6x8	M 1/4” 90°

FITTINGS FOR HIGH PRESSURE HOSE

GALVANIZED FITTINGS FOR HIGH PRESSURE HOSE



CODE	DESCRIPTION
1314160	HP fitting FS 1/4” for hose 3/16”
1315160	HP fitting FS 16x1,5 for hose 3/16”
1312160J	HP fitting FS 1/2 Jic for hose 3/16
1314140	HP fitting FS 1/4” for hose 1/4”
1314149	HP fitting FS 1/4” 90° for hose 1/4”
1314180	HP fitting FS 1/4” NPS for hose 1/4”
1315140	HP fitting FS 16x1,5 for hose 1/4”
1338140	HP fitting FS 3/8” for hose 1/4”
1338149	HP fitting FS 3/8” 90° for hose 1/4”
1312140J	HP fitting FS 1/2 Jic for hose 1/4”
1312149J	HP fitting FS 1/2 Jic 90° for hose 3/8”
1315380	HP fitting FS 16x1,5 for hose 3/8”
1338380	HP fitting FS 3/8” for hose 3/8”
1338390	HA fitting FG 3/8” NPS for hose 3/8”
1338389	HP fitting FS 3/8” 90° for hose 3/8”
1312380	HA fitting FG 1/2” for hose 3/8”
1312120	HP fitting FS 1/2” for hose 1/2”
1312129	HP fitting FS 1/2” 90° for hose 1/2”

GALVANIZED FERRULE FOR HIGH PRESSURE HOSE



CODE	DESCRIPTION
1300016	Ferrule for HP hose 3/16” iron
1300014	Ferrule for HP hose 1/4” iron
1300038	Ferrule for HP hose 3/8” iron
1300012	Ferrule for HP hose 1/2” iron
1300214	Ferrule for HP doube braid hose 1/4” iron
1300238	Ferrule for HP doube braid hose 3/8” iron

STAINLESS STEEL FITTING FOR HIGH PRESSURE HOSE



CODE	DESCRIPTION
1314160i	Stainless steel HP fitting FS 1/4” for hose 3/16”
1314140i	Stainless steel HP fitting FS 1/4” for hose 1/4”
1314149i	Stainless steel HP fitting FS 1/4” 90° for hose 1/4”
1338380i	Stainless steel HP fitting FS 3/8” for hose 3/8”
1338389i	Stainless steel HP fitting FS 3/8” 90° for hose 3/8”

RECOVERABLE FITTING FOR HIGH PRESSURE HOSE

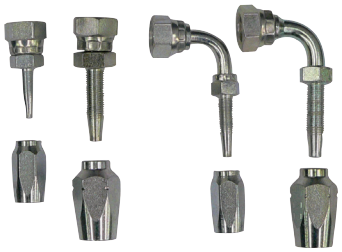

CODE	DESCRIPTION
1414160	Recoverable HP fitting FS 1/4” for hose 3/16”
1415160	Recoverable HP fitting FS 16x1,5 for hose 3/16”
1414140	Recoverable HP fitting FS 1/4” for hose 1/4”
1414149	Recoverable HP fitting FS 1/4” 90° for hose 1/4”
1415140	Recoverable HP fitting FS 16x1,5 for hose 1/4”
1438140	Recoverable HP fitting FS 3/8” for hose 1/4”
1438149	Recoverable HP fitting FS 3/8” 90° for hose 1/4”
1415380	Recoverable HP fitting FS16x1,5 for hose 3/8”
1438380	Recoverable HP fitting FS 3/8” for hose 3/8”
1438389	Recoverable HP fitting FS 3/8” 90° for hose 3/8”

CODE	DESCRIPTION
1300016R	Recoverable ferrule for HP hose 3/16” iron
1300014R	Recoverable ferrule for HP hose 1/4” iron
1300038R	Recoverable ferrule for HP hose 3/8” iron
1300012R	Recoverable ferrule for HP hose 1/2” iron

FITTINGS FOR SUCTION SYSTEM

GALVANIZED NUT AND HOLDER

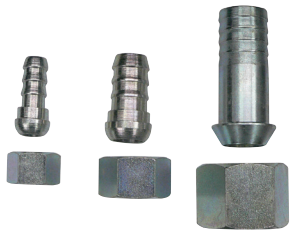

CODE	DESCRIPTION
1912130	Nut and holder F 1/2” for hose 13 mm in iron
1912139	Nut and holder F 1/2” for hose 13 mm 90° in iron
1934130	Nut and holder F 3/4” for hose 13 mm in iron
1934190	Nut and holder F 3/4” for hose 19 mm in iron
1934139	Nut and holder F 3/4” for hose 13 mm 90° in iron
1934199	Nut and holder F 3/4” for hose 19 mm 90° in iron

CODE	DESCRIPTION
1901250	Nut and holder F 1” for hose 25 mm in iron
1901259	Nut and holder 1” for hose 25 mm 90° in iron
1936130	Nut and holder F 36x2 for hose 13 mm in iron
1936190	Nut and holder F 36x2 for hose 19 mm in iron
1936250	Nut and holder F 36x2 for hose 25 mm in iron
1936139	Nut and holder F 36x2 for hose 13 mm 90° in iron
1936199	Nut and holder F 36x2 for hose 19 mm 90° in iron
1936259	Nut and holder F 36x2 for hose 25 mm 90° in iron
1920130	Nut and holder F 20x2 for hose 13 mm in iron
1920139	Nut and holder F 20x2 for hose 13 mm 90° in iron
1926120	Nut and holder F 26x125 for hose 19 mm in iron
1926129	Nut and holder F 26x125 for hose 19 mm 90° in iron

GALVANIZED NUT AND 90° HOLDER



GALVANIZED FERRULE



CODE	DESCRIPTION
1900013	Ferrule for HP hose 13 mm iron
1900019	Ferrule for HP hose 19 mm iron
1900025	Ferrule for HP hose 19 mm iron

GALVANIZED SUCTION PIPE



CODE	DESCRIPTION
1900015	Iron suction pipe 15x1
1900012	Iron suction pipe 1/2”
1900028	Iron suction pipe 28x1,5
1900020	Iron return pipe pipe
1900945	Iron suction pipe 28x1,5 lenght 900mm with cut 45° for barrells



CODE	DESCRIPTION
000100	Stainless steel suction extension 20cm MM 1”
001425	Stainless steel suction extension 25cm MM 1/4”
001450	Stainless steel suction extension 50cm MM 1/4”
001510	Stainless steel suction extension 50cm MM 15x1
000120	Stainless steel suction extension 50cm MM 1/2"
028150	Stainless steel suction extension 50cm MM 28x1,5
000141	Stainless steel coupling FF 1/4”
000151	Stainless steel coupling FF 15x1
000012	Stainless steel coupling FF 1/2"
002815	Stainless steel coupling FF 28x1,5
365001	Stainless steel reduction F 15x1 M 28x1,5
365002	Stainless steel reduction F 1/2" M 28x1,5
365003	Stainless steel reduction F 28x1.5 M 1”

FITTINGS FOR SUCTION SYSTEM

DADI E CODULI INOX



CODE	DESCRIPTION
2912130	Stainless steel holder and nut F 1/2'' for hose 13mm
2912139	Stainless steel holder and nut 1/2'' for hose 13mm 90°
VSBG239	Stainless steel holder and nut F 3/4'' for hose 13mm
2934190	Stainless steel holder and nut F 3/4'' for hose 19mm
2934139	Stainless steel holder and nut F 3/4'' for hose 13mm 90°
2934199	Stainless steel holder and nut F 3/4'' for hose 19mm 90°
2901250	Stainless steel holder and nut F 1'' for hose 25mm
2901259	Stainless steel holder and nut F 1'' for hose 25mm 90°

CODE	DESCRIPTION
2936130	Stainless steel holder and nut F 36x2 for hose 13mm
2936190	Stainless steel holder and nut F 36x2 for hose 19mm
2936250	Stainless steel holder and nut F 36x2 for hose 25mm
2936139	Stainless steel holder and nut F 36x2 for hose 13mm 90°
2936199	Stainless steel holder and nut F 36x2 for hose 19mm 90°
2936259	Stainless steel holder and nut F 36x2 for hose 25mm 90°
2920130	Stainless steel holder and nut F 20x2 for hose 13mm
2920139	Stainless steel holder and nut F 20x2 for hose 13mm 90°

DADI E CODULI 90° INOX



STAINLESS STEEL SUCTION PIPE



CODE	DESCRIPTION
2900015	Stainless steel suction pipe 50cm 15x1
2900012	Stainless steel suction pipe 50cm 1/2''
2900028	Stainless steel suction pipe 50cm 28x1,5
2900020	Stainless steel return pipe
2900220	Stainless steel return pipe for tank

CODE	DESCRIPTION
1414160i	S. steel recoverable HP fittings FS 1/4'' with iron nut for hose 3/16''
1414140i	S. steel recoverable HP fittings FS 1/4'' with iron nut for hose 1/4''
1414149i	S. steel recoverable HP fittings FS 1/4''90° with iron nut for hose 1/4''
1438380i	S. steel recoverable HP fittings FS 3/8'' with iron nut for hose 3/8''
1438389i	S. steel recoverable HP fittings FS 3/8'' 90° with iron nut for hose 3/8''
1412120i	S. steel recoverable HP fittings FS 1/2'' with iron nut for hose 1/2''
1412129i	S. steel recoverable HP fittings FS 1/2'' 90° with iron nut for hose 1/2''
1434340i	S. steel recoverable HP fittings FS 3/4'' with iron nut for hose 3/4''
1434349i	S. steel recoverable HP fittings FS 3/4'' 90° with iron nut for hose 3/4''

STAINLESS STEEL REUSABLE FITTINGS WITH IRON NUT



CODE	DESCRIPTION
1300016R	Recoverable ferrule for HP hose 3/16'' iron
1300014R	Recoverable ferrule for HP hose 1/4'' iron
1300038R	Recoverable ferrule for HP hose 3/8'' iron
1300012R	Recoverable ferrule for HP hose 1/2'' iron

HIGH PRESSURE FITTINGS



TANK ADAPTER WITH "SA" TYPE GASKET



TANK NIPLLE WITH LONG THREAD TYPE "FM"







CODE	DESCRIPTION
161814	Stainless steel nipple HP 1/8" x 1/4"
161414	Stainless steel nipple HP 1/4" x 1/4"
161514	Stainless steel nipple HP 1/4" x 16x1,5
163814	Stainless steel nipple HP 1/4" x 3/8"
161412	Stainless steel nipple HP 1/4" x 1/2"
161420	Stainless steel nipple HP 1/4" x 20x2
161515	Stainless steel nipple HP 16x1,5 x 16x1,5
161538	Stainless steel nipple HP 16x1,5 x 3/8"
163838	Stainless steel nipple HP 3/8" x 3/8"
161238	Stainless steel nipple HP 3/8" x 1/2"
161212	Stainless steel nipple HP 1/2" x 1/2"
161234	Stainless steel nipple HP 1/2" x 3/4"
163434	Stainless steel nipple HP 3/4" x 3/4"
161034	Stainless steel nipple HP 1" x 3/4"
161010	Stainless steel nipple HA 1" x 1"
16112112	Stainless steel nipple HA 1 1/2" x 1 1/2"

HOPPER ADAPTER NIPPLES COMPETE WITH SHORT SLEEVE GASKET

Code	Description
SA3638	Nipple HA 36 x 2 M x 3/8" M
SA3612	Nipple HA 36 x 2 M x 1/2" M
SA3634	Nipple HA 36 x 2 M x 3/4" M
SA3610	Nipple HA 36 x 2 M x 1" M

HOPPER ADAPTER REDUCTIONS COMPLETE WITH SHORT SLEEVE GASKET

Code	Description
GE3638	Nipple HA 36 x 2 M x F 3/8"
GE3612	Nipple HA 36 x 2 M x F 1/2"
GE3634	Nipple HA 36 x 2 M x F 3/4"
GE3610	Nipple HA 36 x 2 M x F 1"

CODE	DESCRIPTION
151818	Nipple HA 1/8" x 1/8"
151814	Nipple HA 1/8" x 1/4"
151414	Nipple HA 1/4" x 1/4"
151441	Nipple HA 1/4" x 1/4" conical
151616	Nipple HA 1/4" NSP x 1/4" NPS
151415	Nipple HA 1/4" x 16x1,5
151438	Nipple HA 1/4" x 3/8"
151412	Nipple HA 1/4" x 1/2"
151420	Nipple HA 1/4" x 20x2
151515	Nipple HA 16x1,5 x 16x1,5
151538	Nipple HA 16x1,5 x 3/8"
153838	Nipple HA 3/8" x 3/8"
153812	Nipple HA 3/8" x 1/2"
153834	Nipple HA 3/8" x 3/4"
151212	Nipple HA 1/2" x 1/2"
151234	Nipple HA 1/2" x 3/4"
153434	Nipple HA 3/4" x 3/4"
151034	Nipple HA 1" x 3/4"
151010	Nipple HA 1" x 1"
1510112	Nipple HA 1" x 1 1/2"
1510114	Nipple HA 1" x 1 1/4"
15114114	Nipple HA 1 1/4" x 1 1/4"
152010	Nipple HA 2" x 1"
1520112	Nipple HA 2" x 1 1/2"
151413	Nipple HA 1/4" x 1/2 JIC
151341	Nipple HA 1/4" conical x 1/2 JIC

CODE	DESCRIPTION
FM61006VSB	Nipple HA 3/4" x 36 x 2 M
FM61066VSB	Nipple HA 1/2" x 36 x 2 M
FM61005VSB	Nipple HA 1" x 36 x 2 M

HIGH PRESSURE FITTINGS

CODE	DESCRIPTION
171414	Adapter FS 1/4” x M 1/4”
171314	Adapter FS 1/2 JIC x M 1/4”
171415	Adapter FG 1/4” x M 16x1,5
171614	Adapter FG 1/4” NPS x M 1/4” GAS
171438	Adapter FG 1/4” x M 3/8”
171514	Adapter FG 16x1,5 x M 1/4”
171515	Adapter FG 16x1,5 x M 16x1,5
171538	Adapter FG 16x1,5 x M 3/8”
173814	Adapter FG 3/8” x M 1/4”
173815	Adapter FG 3/8” x M 16x1,5
173838	Adapter FG 3/8” x M 3/8”
171238	Adapter FG 1/2” x M 3/8”
173438	Adapter FG 3/4” x M 3/8”
171212	Adapter FG 1/2” x M 1/2”
173412	Adapter FG 3/4” x M 1/2”
173434	Adapter FG 3/4” x M 3/4”
171010	Adapter FG 1” x M 1”





CODE	DESCRIPTION
181414	Stainless steel adapter FG 1/4” x M 1/4”
181438	Stainless steel adapter FG 1/4” x M 3/8”
183814	Stainless steel adapter FG 3/8” x M 1/4”
183838	Stainless steel adapter FG 3/8” x M 3/8”



CODE	DESCRIPTION
171490	Adapter FG 1/4” x M 1/4” 90°
171499	Adapter FG 1/4” x FG 1/4” 90°
173890	Adapter FG 3/8” x M 3/8” 90°
171290	Adapter FG 1/2” x M 1/2” 90°
173490	Adapter FG 3/4” x M 3/4” 90°
171090	Adapter FG 1” x M 1” 90°

CODE	DESCRIPTION
171490i	Stainless steel Adapter FG 1/4” x M 1/4” 90°
173890i	Stainless steel Adapter FG 3/8” x M 3/8” 90°

CODE	DESCRIPTION
155018	Copper washer 1/8”
155014	Copper washer 1/4”
155038	Copper washer 3/8”
155012	Copper washer 1/2”
155034	Copper washer3/4”
155040	Copper washer 1”



HIGH PRESSURE FITTINGS

CODE	DESCRIPTION
50144	Sleeve HP FF 1/4”
50388	Sleeve HP FF 3/8”
50122	Sleeve HP FF 1/2”
50344	Sleeve HP FF 3/4”
50111	Sleeve HP FF 1”





CODE	DESCRIPTION
20144	L-fitting HP FF 1/4”
20145	L-fitting HP MM 1/4”
20388	L-fitting HP FF 3/8”
20389	L-fitting HP MM 3/8”
20122	L-fitting HP FF 1/2”
20344	L-fitting HP FF 3/4”

CODE	DESCRIPTION
40144	T-fitting HP FF 1/4”
40388	T-fitting HP FF 3/8”
40122	T-fitting HP FF 1/2”
40344	T-fitting HP FF 3/4”
40111	T-fitting HP FF 1”



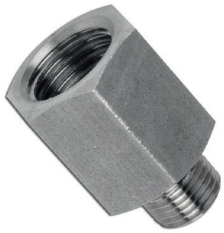

CODE	DESCRIPTION
301418	Reduction HP M 1/4” F 1/8”
303814	Reduction HP M 3/8” F 1/4”
301238	Reduction HP M 1/2” F 3/8”
303412	Reduction HP M 3/4” F 1/2”
301034	Reduction HA M 1” F 3/4”
3011210	Reduction HP M 1 1/2” F 1”

CODE	DESCRIPTION
600114	Thread cap F 1/4”
600138	Thread cap F 3/8”
600112	Thread cap F 1/2”
600134	Thread cap F 3/4”
600136	Thread cap F 36x2



LOW PRESSURE FITTINGS

RETRACTABLE CAP



Code	Description
600K0014	S.Steel L fitting MF 1/4”
600K0038	S.Steel L fitting MF 3/8”
600K0012	S.Steel L fitting MF 1/2”
600K0034	S.Steel L fitting MF 3/4”

Code	Description
590K0014	S.Steel L fitting FF 1/4”
590K0038	S.Steel L fitting FF 3/8”
590K0012	S.Steel L fitting FF 1/2”
590K0034	S.Steel L fitting FF 3/4”

L-LINK



T-PIECE



Code	Description
610K0014	S.Steel T fitting FF 1/4”
610K0038	S.Steel T fitting FF 3/8”
610K0012	S.Steel T fitting FF 1/2”
610K0034	S.Steel T fitting FF 3/4”

Code	Description
520K0014	S.Steel Thread MM 1/4”
520K0038	S.Steel Thread MM 3/8”
520K0012	S.Steel Thread MM 1/2”
520K0034	S.Steel Thread MM 3/4”

NIPPLE



FITTINGS: LOW PRESSURE

RETRACTABLE CAP



CODE	DESCRIPTION
181400	Stainless steel cap M 1/4”
183800	Stainless steel cap M 3/8”
60188	Aluminium cap M 1/8”
60144	Aluminium cap M 1/4”
60388	Aluminium cap M 3/8”
60122	Aluminium cap M 1/2”

TAPED NIPPLE

CODE	DESCRIPTION
46050	Taped nipple 1/8” x 1/8”
46150	Taped nipple 1/8” x 1/4”
46100	Taped nipple 1/4” x 1/4”
46200	Taped nipple 1/4” x 3/8”
46250	Taped nipple 1/4” x 1/2”
46300	Taped nipple 3/8” x 3/8”
46400	Taped nipple 3/8” x 1/2”
46500	Taped nipple 1/2” x 1/2””

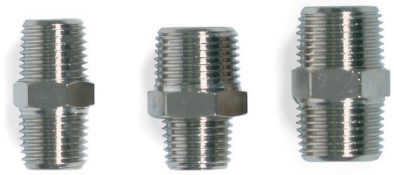

REDUCTION



CODE	DESCRIPTION
47100	Reduction F 1/8” x M 1/4”
47200	Reduction F 1/4” x M 3/8”
47300	Reduction F 1/4” x M 1/2”
47400	Reduction F 3/8” x M 1/2”

EXTENDED REDUCTION

CODE	DESCRIPTION
48150	Extended reduction F 1/4” x M 1/8”
48200	Extended reduction F 3/8” x M 1/4”
48300	Extended reduction F 1/2” x M 1/4”
48550	Extended reduction F 1/2” x M 3/8”

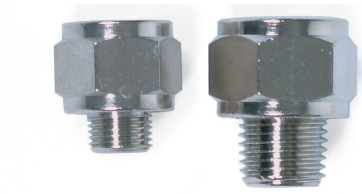

SLEEVE

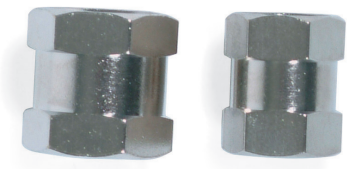

CODE	DESCRIPTION
49200	Sleeve 1/4”
49300	Sleeve 3/8”
49400	Sleeve 1/2”

CODE	DESCRIPTION
21507	Low pressure extension 50mm for gauge FM 1/4””



FITTINGS: LOW PRESSURE

L-FITTING

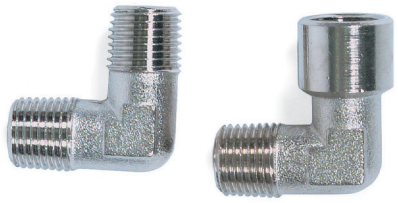

CODE	DESCRIPTION
50500	L-fitting FF 1/4”
50400	L-fitting FM 1/4”
50570	L-fitting MM 1/4”
50550	L-fitting FF 3/8”
50450	L-fitting FM 3/8”
50470	L-fitting MM 3/8”
50560	L-fitting FF 1/2”
50460	L-fitting FM 1/2”
50360	L-fitting MM 1/2”

Y-FITTING

CODE	DESCRIPTION
50200	Y-fitting FFF 1/4”
50100	Y-fitting FMF 1/4”
50250	Y-fitting FFF 3/8”
50150	Y-fitting FMF 3/8”

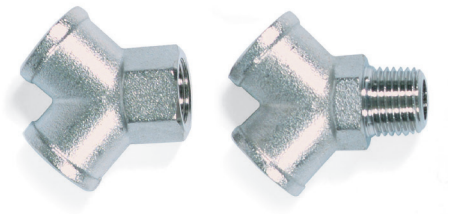

T-FITTING

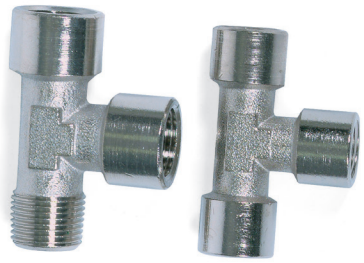

CODE	DESCRIPTION
50800	T-fitting FFF 1/4”
50850	T-fitting FFF 3/8”
50860	T-fitting FFF 1/2”
50600	T-fitting MFF 1/4”
50650	T-fitting MFF 3/8”
50660	T-fitting MFF 1/2”

MILLED NUT FITTING

CODE	DESCRIPTION
40180	Milled nut fitting M 1/4”
40182	Milled nut fitting M 3/8”
40190	Milled nut fitting F 1/4”
40192	Milled nut fitting F 3/8”
41060	Milled nut F 1/4”

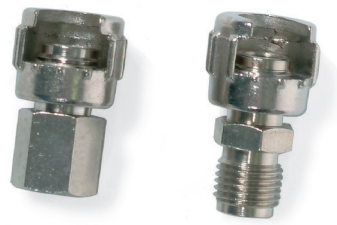

SILENCER



CODE	DESCRIPTION
110200	Sintered bronze silencer M 1/4”
110201	Plastic silencer M 1/4”
110202	Plastic silencer M 3/8”
110203	Plastic silencer M 1/2”

FITTINGS: LOW PRESSURE



CODE	DESCRIPTION
41190	Hose fitting with F quick connection for hose 6x14
41290	Hose fitting with F quick connection for hose 8x12
41200	Hose fitting with F quick connection for hose 8x17
41390	Hose fitting with F quick connection for hose 10X15

CODE	DESCRIPTION
40050	Hose fitting with M quick connection for hose 6x14
40290	Hose fitting with M quick connection for hose 8x12
40060	Hose fitting with M quick connection for hose 8x17
40390	Hose fitting with M quick connection for hose 10x15

CODE	DESCRIPTION
40010	Hose fitting with bayonet connection for hose 6x14
40014	Hose fitting with bayonet connection for hose 8x17

CODE	DESCRIPTION
40020	Hose fitting with bayonet connection for hose 6x14
40021	Hose fitting with bayonet connection for hose 8x17

CODE	DESCRIPTION
40100	Quick connection F 1/4" ("Italy")
40110	Quick connection F 1/4" ("Germany")
40070	Quick connection M 1/4" ("Italy")
40170	Quick connection M 1/4" ("Germany")
40130	Quick connection bayonet

"ITALY" CONNECTION



"GERMANY" CONNECTION



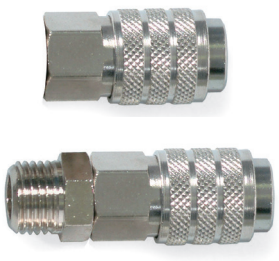

CODE	DESCRIPTION
41150	Quick connection fitting F 1/4"
4115038	Quick connection fitting F 3/8"

CODE	DESCRIPTION
41100	Quick connection fitting M 1/4"
4110028	Quick connection fitting M 3/8"

CODE	DESCRIPTION
128614	Push-on fitting for hose 6x8 M 1/4"
129814	Push-on fitting for hose 6x8 M 1/4" 90°
128114	Push-on fitting for hose 8x10 M 1/4"
129114	Push-on fitting for hose 8x10 M 1/4" 90°
128238	Push-on fitting for hose 10x12 M 3/8"
129238	Push-on fitting for hose 10x12 M 3/8" 90°

PUSH-ON FITTING



FITTINGS: LOW PRESSURE

SPIRAL FITTING

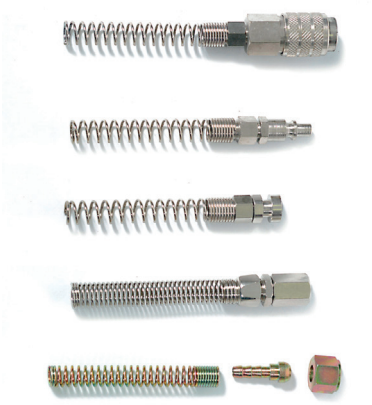

CODE	DESCRIPTION
41445	Fitting with M quick connection for hose 6x8
41440	Fitting with F quick connection for hose 6x8
41425	Fitting with bayonet connection for hose6x8
41470	Fitting with F 1/4” connection for hose 6x8
41475	Fitting with FS 1/4” connection for hose 6x8 with spring
41485	Fitting with FS 1/4” connection for hose 8x10 with spring
41482	Barb fitting F 1/4” for hose 6x8

CODE	DESCRIPTION
FC14651	Fitting for oversized hose 6,5x10mm F 1/4” BSP
FC38811	Fitting for oversized hose 8X11mm F3/8” BSP



AUTOMATIC FITTING





CODE	DESCRIPTION	Ø HOSE	FITTING
110418	Automatic fitting	2x4	M 1/8”
119418	Automatic fitting 90°	2x4	M 1/8”
112424	Automatic fitting	2x4	FF ø4
110414	Automatic fitting	2x4	M 1/4”
119414	Automatic fitting 90°	2x4	M 1/4”
114646	Automatic fitting	4x6	FF ø6
110618	Automatic fitting	4x6	M 1/8”
119618	Automatic fitting 90°	4x6	M 1/8”
110614	Automatic fitting	4x6	M 1/4”
F110614	Automatic fitting	4x6	F 1/4”
119614	Automatic fitting 90°	4x6	M 1/4”
116868	Automatic fitting	6x8	FF ø8
110818	Automatic fitting	6x8	M 1/8”
119818	Automatic fitting 90°	6x8	M 1/8”
110814	Automatic fitting	6x8	M 1/4”
F110814	Automatic fitting	6x8	F 1/4”
119814	Automatic fitting 90°	6x8	M 1/4”
119838	Automatic fitting 90°	6x8	M 3/8”
110114	Automatic fitting	8x10	M 1/4”
110138	Automatic fitting	8x10	M 3/8”
119138	Automatic fitting 90°	8x10	M 3/8”
110112	Automatic fitting	8x10	M 1/2”
119112	Automatic fitting 90°	8x10	M 1/2”
111238	Automatic fitting	10x12	M 3/8”
111212	Automatic fitting	10x12	M 1/2”
TRAP24	“T” Automatic fitting	2x4	FFF ø4
TRAP46	“T” Automatic fitting	4x6	FFF ø6
TRAP68	“T” Automatic fitting	6x8	FFF ø8

ACCESSORIES FOR SANDBLASTING MACHINES



MINI SANDBLASTING MACHINES OF OUR PRODUCTION IN LOW PRESSURE AIR CONSUMPTION

HIGH PRESSURE INDUSTRIAL SANDBLASTING MACHINES FROM 18 TO 200 LITERS OF CAPACITY'





SANDBLASTING MASKS, COMPRESSORS FOR FEEDING SANDBLASTING MACHINES AND ACCESSORIES

SANDBLASTING NOZZLES, GALVANIZED FITTINGS AND SPARE PARTS FOR ALL TYPES OF SANDBLASTING MACHINES

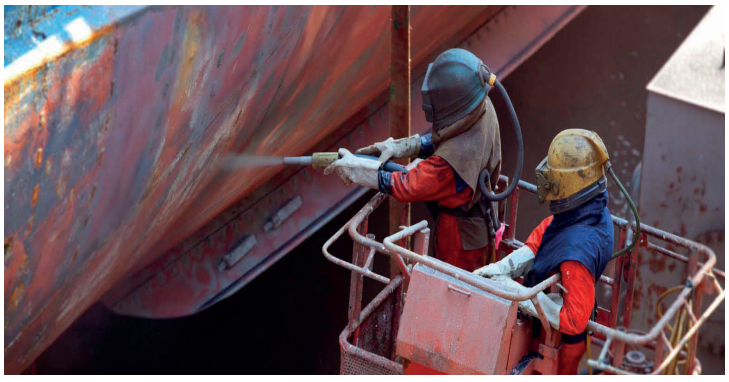



HUMIDIFIER KIT FOR SANDBLASTING AND KIT FOR HYDRO BLASTING

TURBINES FOR PIPE BLASTING

THORBLAST

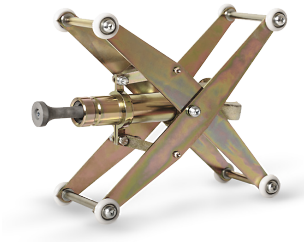

CODE	DESCRIPTION
112630	Thorblast turbine complete with centering carriage and nozzles 12.5mm for pipes from Ø 70 mm to Ø 300mm

PIPEBLASTAST

CODE	DESCRIPTION
112730	Pipeblast turbine complete with centering carriage and two nozzles 6.5 for pipes from Ø 300 mm to Ø 915 mm
2730XX	Nozzle for Pipeblast 6.5 - 8.0 - 9.5 mm



TUBOBLAST

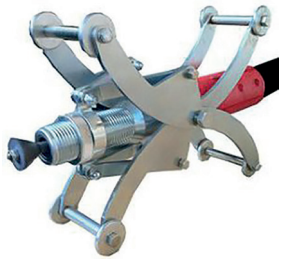

CODE	DESCRIPTION
600-100	Tuboblast turbine complete with centering carriage and kit for pipes from Ø 54 mm to Ø 340 mm
600-101	Tuboblast turbine without centering carriage

TUBOBLAST SENIOR

CODE	DESCRIPTION
600-153	Tuboblast Senior turbine complete with centering carriage and kit for pipes from Ø 80 mm to Ø 500 mm
600-150	Tuboblast Senior turbine without centering carriage

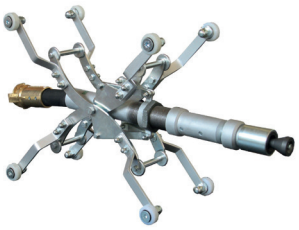

CIRCLEBLAST

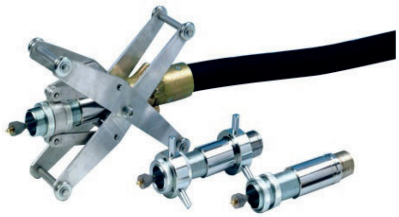

CODE	DESCRIPTION
A3002100	Circle blast CB-0 sandblasting system for pipes from ø32 mm to ø76 mm
A3002200	Circle blast CB-1 sandblasting system with guide for pipes from ø76 mm to ø127 mm
A3002300	Circle blast CB-2 sandblasting system with centering carriage for pipes from ø127 mm to ø305 mm

SPINNERBLAST

CODE	DESCRIPTION
A3030000	Spinner blast sandblasting system for pipes from ø203 mm to ø915 mm (nozzles excluded)
ASBXX	Nozzle for spinnerblast



BLAST NOZZLES



CODE	DESCRIPTION
450200	Threaded OX nozzle in tungsten carbide Ø 6,5 x 145
450201	Threaded OX nozzle in tungsten carbide Ø 8 x 150
450202	Threaded OX nozzle in tungsten carbide Ø 9,5 x 175
450203	Threaded OX nozzle in tungsten carbide Ø 11 x 195
450204	Threaded OX nozzle in tungsten carbide Ø12,7 x 220

CODE	DESCRIPTION
450302	Threaded OX MAXI nozzle in boron carbide Ø 6,5 x 140
450303	Threaded OX MAXI nozzle in boron carbide Ø 8 x 145
450304	Threaded OX MAXI nozzle in boron carbide Ø 9,5 x 170
450305	Threaded OX MAXI nozzle in boron carbide Ø 11 x 195
450306	Threaded OX MAXI nozzle in boron carbide Ø 12,7 x 215





CODE	DESCRIPTION
450402	Threaded OX MAXI nozzle in silicon carbide Ø 6,5 x 140
450403	Threaded OX MAXI nozzle in silicon carbide Ø 8 x 145
450404	Threaded OX MAXI nozzle in silicon carbide Ø 9,5 x 170
450405	Threaded OX MAXI nozzle in silicon carbide Ø 11 x 195
450406	Threaded OX MAXI nozzle in silicon carbide Ø 12,7 x 215

CODE	DESCRIPTION
455200	Threaded PERFORMANCE nozzle in tungsten carbide Ø 6,5 x 130
455201	Threaded PERFORMANCE nozzle in tungsten carbide Ø 8 x 150
455202	Threaded PERFORMANCE nozzle in tungsten carbide Ø 9,5 x 170
455203	Threaded PERFORMANCE nozzle in tungsten carbide Ø 11,5 x 200
455204	Threaded PERFORMANCE nozzle in tungsten carbide Ø12,5 x 210





CODE	DESCRIPTION
455302	Threaded PERFORMANCE nozzle in boron carbide Ø 6,5 x 130
455303	Threaded PERFORMANCE nozzle in boron carbide Ø 8 x 150
455304	Threaded PERFORMANCE nozzle in boron carbide Ø 9,5 x 170
455305	Threaded PERFORMANCE nozzle in boron carbide Ø 12,5 x 210
455306	Ugello PERFORMANCE tetraboro filettato Ø 12,5 x 210

CODE	DESCRIPTION
455402	Threaded PERFORMANCE nozzle in boron carbide Ø 6,5 x 130
455403	Threaded PERFORMANCE nozzle in boron carbide Ø 8 x 150
455404	Threaded PERFORMANCE nozzle in boron carbide Ø 9,5 x 170
455405	Threaded PERFORMANCE nozzle in boron carbide Ø 11 x 200
455406	Threaded PERFORMANCE nozzle in boron carbide Ø 12,5 x 210



BLAST NOZZLES





CODE	DESCRIPTION
450100	Cylindrical nozzle Ø 4 x 40
450101	Cylindrical nozzle Ø 5 x 40
450102	Cylindrical nozzle Ø 6 x 40
450130	Cylindrical nozzle Ø 7 x 40
450140	Cylindrical nozzle Ø 8 x 40
450150	Cylindrical nozzle Ø 10 x 40
450112	Cylindrical flanged nozzle Ø 4 x 40
450113	Cylindrical flanged nozzle Ø 5 x 40
450114	Cylindrical flanged nozzle Ø 6 x 40
450115	Cylindrical flanged nozzle Ø 7 x 40
450116	Cylindrical flanged nozzle Ø 8 x 40
450117	Cylindrical flanged nozzle Ø 10 x 40

CODE	DESCRIPTION
450153	Flanged venturi nozzle Ø 5 x 75
450103	Flanged venturi nozzle Ø 6 x 75
450104	Flanged venturi nozzle Ø 7 x 75
450105	Flanged venturi nozzle Ø 8 x 75
450106	Flanged venturi nozzle Ø 10 x 75





CODE	DESCRIPTION
450502	Angular 40 ° OX nozzle in tungsten carbide threaded Ø 6
450503	Angular 40 ° OX nozzle in tungsten carbide threaded Ø 8
450504	Angular 40 ° OX nozzle in tungsten carbide threaded Ø 10
450505	Angular 40 ° OX nozzle in tungsten carbide threaded Ø 12

CODE	DESCRIPTION
450602	Three holes OX nozzle in tungsten carbide threaded Ø 3 x 80
450603	Three holes OX nozzle in tungsten carbide threaded Ø 5 x 80
450604	Three holes OX nozzle in tungsten carbide threaded Ø 6,5 x 80
450605	Three holes OX nozzle in tungsten carbide threaded Ø 8 x 80
450606	Three holes OX nozzle in tungsten carbide threaded Ø 9,5 x 80





CODE	DESCRIPTION
450702	Mini circular nozzle for internal sandblasting of pipes from 35 to 70 mm. with inlet for abrasive tube 13x23 mm.





CODE	DESCRIPTION
CONT12520	Round nozzle 200 mm long Ø 20 mm
CONT12529	Deflector head 360°
CONT12510	Round blasting nozzle
CONT12519	Deflector head 360°

BLASTING ACCESSORIES



CODE	DESCRIPTION
410109	OX threaded aluminum nozzle holder for hose Ø 40
410110	OX threaded aluminum nozzle holder for hose Ø 45
410111	OX threaded aluminum nozzle holder for hose Ø 48
410122	OX threaded PVC nozzle holder for hose Ø 40
410123	OX threaded PVC nozzle holder for hose Ø 48

CODE	DESCRIPTION
410115	Nozzle ring nut F 1” for hose øe 25
410117	Nozzle ring nut ø31 F 1 1/2" for hose øe 33-40-45-48
410105	Nozzle holder threaded M 1" for hose øe 25
410119	Nozzle holder threaded M 1 1/2” for hose øe 33
410106	Nozzle holder threaded M 1 1/2" for hose øe 40
410107	Nozzle holder threaded M 1 1/2” for hose øe 45
410108	Nozzle holder threaded M 1 1/2"for hose øe 48





CODE	DESCRIPTION
410131	Sleeve for abrasive hose Ø 40
410132	Sleeve for abrasive hose Ø 40 x 48
410133	Sleeve for abrasive hose Ø 48

CODE	DESCRIPTION
200251	Rapid metal hose connector for hose Ø 40
200253	Rapid metal hose connector for hose Ø 48
200255	Rapid PVC hose connector for hose Ø 40
200257	Rapid PVC hose connector for hose Ø 48





CODE	DESCRIPTION
200827	Rapid fitting F 1 1/4"
200828	Rapid fitting F 1 1/2"

CODE	DESCRIPTION
400106	Express hose connector for hose Ø 6
400105	Express hose connector for hose Ø 10
400001	Express hose connector for hose Ø 13
400002	Express hose connector for hose Ø 15
400003	Express hose connector for hose Ø 19
400034	Express hose connector for hose Ø 25
400035	Express hose connector for hose Ø 32
GRI400105	Express hose connector for hose Ø 13 with clamps
GRI400106	Express hose connector for hose Ø 25 with clamps



FITTINGS FOR BLASTING



CODE	DESCRIPTION
400012	Brass hose connector for hose Ø 20 M 3/4"
400012A	Brass hose connector for hose Ø 25 M 3/4”
400013B	Brass hose connector for hose Ø 20 M 1”
400013	Brass hose connector for hose Ø 25 M 1"
400013A	Brass hose connector for hose Ø 30 M 1”

CODE	DESCRIPTION
400036	Hose clamp collar Ø 22 / 29
400007	Hose clamp collar Ø 29 / 34
400008	Hose clamp collar Ø 33 / 40
400009	Hose clamp collar Ø 41 / 49
400010	Hose clamp collar Ø 47 / 60
400011	Hose clamp collar Ø 60 / 76
400112	Hose clamp collar Ø 76 / 94
400113	Hose clamp collar Ø 95 / 115
GRI400125	Hose clamp collar with clamps Ø 25
GRI400114	Hose clamp collar with clamps Ø 40
GRI400151	Hose clamp collar with clamps Ø 51

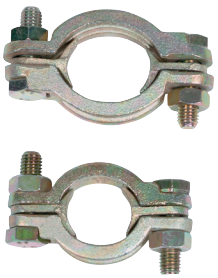



CODE	DESCRIPTION
400029	Rapid seal
400030	Double rapid seal
400026	Express seal

CODE	DESCRIPTION
400038	Express fitting F 1/4"
400021	Express fitting F 3/8"
400022	Express fitting F 1/2"
400023	Express fitting F 3/4"
400024	Express fitting F 1"
400025	Express fitting F 1 1/4"
400037	Express fitting M 1/4"
400016	Express fitting M 3/8"
400017	Express fitting M 1/2"
400018	Express fitting M 3/4"
400019	Express fitting M 1"
400020	Express fitting M 1 1/4"

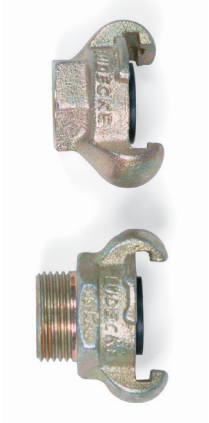

FITTINGS FOR BLASTING

CODE	DESCRIPTION
RE200012	Express water connection 1/2 M
RE200034	Express water connection 3/4 M
RE200001	Express water connection 1" M
RE250012	Express water connection 1/2 F
RE250034	Express water connection 3/4 F
RE250001	Express water connection 1" F
RE300013	Express connection for water pipe Ø13





CODE	DESCRIPTION
401026	Y-fitting FFF 3/4”
401027	Y-fitting FFF 1”
401028	Y-fitting FFF 1”1/4
401029	Y-fitting FFF 1”1/2

CODE	DESCRIPTION
401032	Rubberized Y-fitting FFF 1”1/4
401034	Rubberized nipple M 1”1/4 x M 1”1/4
401035	Rubberized extension M 1”1/4 x M 1”1/4





CODE	DESCRIPTION
402004	Air inlet humidity separator filter 1”
402004C	Cartridge for air humidity filter 1”
402005	Air inlet humidity separator filter 1” 1/2
402005C	Catridge for air humidity filter 1” 1/2
AF50001	Air inlet humidity separator filter YAF 5000 F 1”

CODE	DESCRIPTION
300072	Air filter with activated carbon mask for 2 operators
300074	Air filter with activated carbon mask for 4 operators
30070	Catridge with activated carbon for CFR-20 - RADEX - RPB
30071	Catridge with activated carbon for CLEMCO - CPF - CONTRACOR





CODE	DESCRIPTION
SPV00VS3V	Air inlet filter for up to 2 operators

SECURITY VALVE

CODE	DESCRIPTION
401126	Security valve 12 bar (ISPESL)

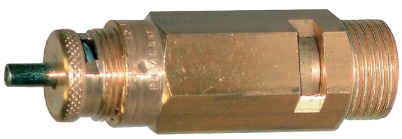

FITTINGS FOR BLASTING

PIPE UNION

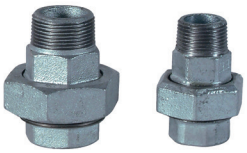

CODE	DESCRIPTION
Z34134	Taped pipe union MF 3/4”
Z3411	Taped pipe union MF 1”
Z341114	Taped pipe union MF 1”1/4
Z341112	Taped pipe union MF 1”1/2

ELBOW 90°



CODE	DESCRIPTION
Z09034	Elbow 90° FF 3/4”
Z0901	Elbow 90° FF 1”
Z090114	Elbow 90° FF 1”1/4
Z090112	Elbow 90° FF 1”1/2
Z09234	Elbow 90° MF 3/4”
Z0921	Elbow 90° MF 1”
Z092114	Elbow 90° MF 1”1/4
Z092112	Elbow 90° MF 1”1/2

ELBOW 45°



CODE	DESCRIPTION
Z12034	Elbow 45° FF 3/4”
Z1201	Elbow 45° FF 1”
Z120114	Elbow 45° FF 1”1/4
Z120112	Elbow 45° FF 1”1/2

LONG ELBOW 45°



CODE	DESCRIPTION
Z04034	Long elbow 45° MF 3/4”
Z0401	Long elbow 45° MF 1”
Z040114	Long elbow 45° MF 1”1/4
Z040112	Long elbow 45° MF 1”1/2

TI



THREE WAY FITTING



CODE	DESCRIPTION
Z13034	Ti-fitting FFF 3/4”
Z1301	Ti-fitting FFF 1”
Z130114	Ti-fitting FFF 1”1/4
Z130112	Ti-fitting FFF 1”1/2
Z22312	Three way fitting FFFF 1/2”
Z22334	Three way fitting FFFF 3/4”
Z2231	Three way fitting FFFF 1”
Z2231FT	Three way fitting FFFF 1”1/4
Z2231FTE	Three way fitting FFFF 1”1/2

CAP



CODE	DESCRIPTION
Z30034	Cap F 3/4”
Z3001	Cap F 1”
Z300114	Cap F 1”1/4
Z300112	Cap F 1”1/2

CAP



CODE	DESCRIPTION
Z29034	Cap M 3/4”
Z2901	Cap M 1”
Z290114	Cap M 1”1/4
Z290112	Cap M 1”1/2

FITTINGS FOR BLASTING

NIPPLE

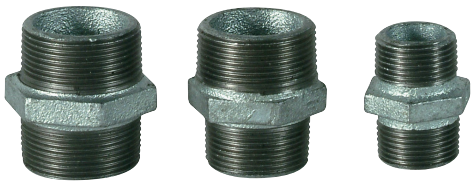

CODE	DESCRIPTION
Z28034	Nipple MM 3/4”
Z3413412	Nipple M 3/4” x 1/2”
Z245134	Nipple M 3/4” x 1”
Z24511434	Nipple M 3/4” x 1”1/4
Z24511234	Nipple M 3/4” x 1”1/2
Z2801	Nipple MM 1”
Z2451141	Nipple M 1” x 1”1/4
Z2451121	Nipple M 1” x 1”1/2
Z280114	Nipple MM 1”1/4
Z245112114	Nipple M 1”1/4 x 1”1/2
Z280112	Nipple M 1”1/2

REDUCTION



CODE	DESCRIPTION
Z2413414	Reduction M 3/4” x F 1/4”
Z2413438	Reduction M 3/4” x F 3/8”
Z2413412	Reduction M 3/4” x F 1/2”
Z241138	Reduction M 1” x F 3/8”
Z241112	Reduction M 1” x F 1/2”
Z241134	Reduction M 1” x F 3/4”
Z24111438	Reduction M 1"1/4 x F 3/8”
Z24111412	Reduction M 1”1/4 x F 1/2”
Z241141	Reduction M 1”1/4 x F 1”
Z24111212	Reduction M 1”1/2 x F 1/2”
Z241121	Reduction M 1”1/2 x F 1”
Z241112114	Reduction M 1”1/2 x F 1”1/4”
Z24121	Reduction M 2” x F 1”

GUN HEAD



CODE	DESCRIPTION
Z27034	Sleeve 3/4”
Z2701	Sleeve 1”
Z2701143	Sleeve 1” 1/4
Z270112	Sleeve 1” 1/2



STEEL AND POLYAMIDE TANK AVAILABLE ON REQUEST FOR THE RECOVERY OF ABRSIVE WASTE IN DIFFERENT SIZES



BLASTING ACCESSORIES

ABRASIVE MIXING UNIT



CODE	DESCRIPTION
401195	Abrasive mixing group with FSV valve for sandblasters 200/300 lt

ABRASIVE MIXING UNIT

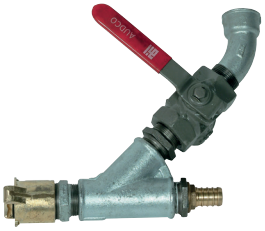

CODE	DESCRIPTION
401196	Abrasive mixing unit 3/4” for sandblasting machines 24/28 lt.
401197	Abrasive mixing unit 1” for sandblasting machines 100/120 lt.
401198	Abrasive mixing unit 1 1/4” for sandblasting machines 200/300 lt.

ABRASIVE REGULATION VALVE

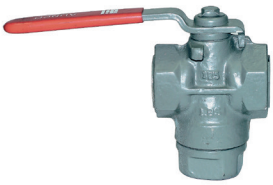

CODE	DESCRIPTION
401102	Abrasive regulation valve 3/4”
401103	Abrasive regulation valve 1”
401104	Abrasive regulation valve 1”1/4

FSV



AMV



RAC-7



CODE	DESCRIPTION
A608000	AMV Abrasive regulation microvalve 1 1/4”
401120	Abrasive regulation valve FSV 1”1/4
401101	Abrasive regulation valve RAC-7 1/2”

TYPE VAL SPRAY



TYPE VESPA



CODE	DESCRIPTION
402001	Complete rubberized closing valve for sandblaster 18/20/28
402002	Closing valve O-ring for sandblaster 18/20/28
402010	Complete rubberized closing valve for sandblaster 60/300
402011	Closing valve O-ring for sandblaster 60/300
402014	Vespa type closing cone for sandblaster 24
402012	Closing valve O-ring for sandblaster 24 type Vespa
402015	Vespa type closing cone for sandblaster 80/120
402016	Vespa type closing cone for sandblaster 200/300
402013	Closing valve O-ring for sandblaster 80/300

BLASTING ACCESSORIES

AIR INLET VALVE



CODE	DESCRIPTION
401195VE	Abrasive mixing unit with diaphragm valve with conical shutter for sandblasting machines 200/300 lt





CODE	DESCRIPTION
401121	Pneumatic air inlet valve MV 1” NC
401122	Pneumatic air inlet valve MV 1 1/4" NC
041125	Shutter kit 1”
041127	Membrane 1”
041126	Shutter kit 1 1/4"
041128	Membrane 1 1/4"
041128WLU	Vulcanized rubber 1”
041128WLB	Vulcanized rubber 1 1/4”

DRAIN VALVE

CODE	DESCRIPTION
401137	Stainless steel diaphragm drain valve 1”
401167	Body
401166	Membrane

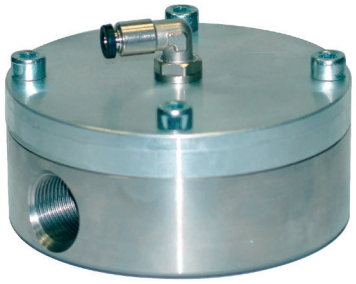

GASKET KIT

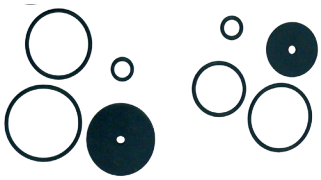

CODE	DESCRIPTION
401128	Gasket kit for pneumatic valve air inlet MV 1"
401129	Gasket kit for pneumatic valve air inlet MV 1 1/4"

REMOTE CONTROL TRANSFORMATION KIT

CODE	DESCRIPTION
COTRA10970C	Remote control kit complete with control valve, silencer and deadman handle
10971C	Remote control valve complete with silencer
10972N	Remote control valve without silencer
110271	Sandblaster silncer
1205000	Repair kit remote control valve RCV-125

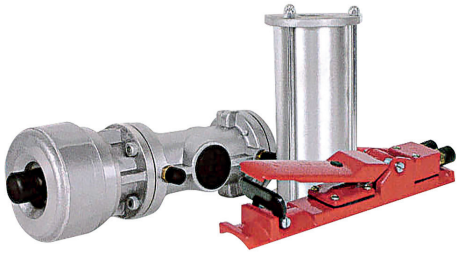

BLASTING ACCESSORIES

MONOTUBE DEADMAN

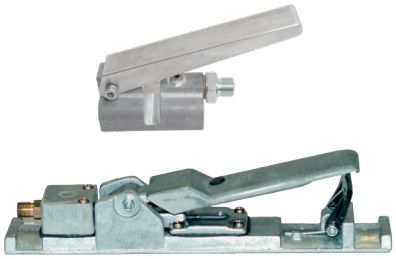

CODE	DESCRIPTION
401142	Pneumatic remote control deadman handle for 1 hose
401141	Pneumatic remote control deadman handle for 1 hose Racohi

TWO-PIPE DEADMAN

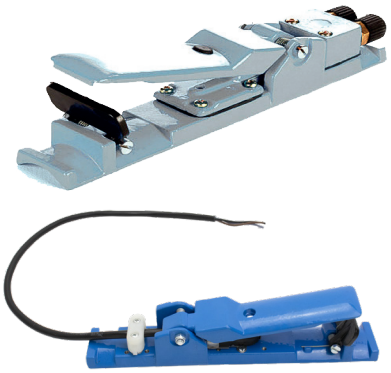

CODE	DESCRIPTION
401143	Pneumatic remote control deadman handle for 2 hoses Racohi
401144	Electric remote control deadman handle for 2 hoses Racohi

PILOT GROUP



CODE	DESCRIPTION
401178	Complete pilot group
401179	Pilot body without filter
HOSE38	Separator filter 3/8”
VSGP35	Brass pin screw
P352021	Small NBR seal
P35119	Big NBR seal

REMOTE CONTROL TRANSFORMATION KIT

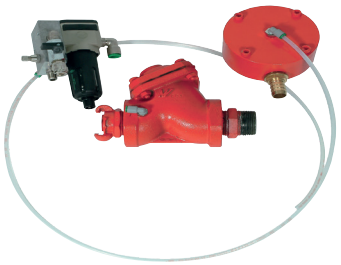

CODE	DESCRIPTION
208080	Remote control transformation kit for sandblasters 20/28
208200	Remote control transformation kit for sandblasters 60/300



CODE	DESCRIPTION
A1144300	Double hose fitted for deadman handle 5 m
A1144410	Double hose fitted for deadman handle 10 m
A1144400	Double hose fitted for deadman handle 20 m
A1144500	Double hose fitted for deadman handle 40 m

BLASTING ACCESSORIES

AQUABLAST



CODE	DESCRIPTION
460100	Aquablast wet sandblasting device

UMD023OX

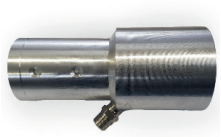



UMD024FL

CODE	DESCRIPTION
UMD023OX	Wet blasting device with connection M1/4" mixing water and internal sand for OX nozzles for pipe Ø25x40
UMD024FL	Wet blasting device with connection M1/4" mixing water and internal sand for flanged nozzles for pipe Somebody 13x25
UMD025FL	Wet blasting device with connection M1/4" mixing water and internal sand for flanged nozzles for pipe Somebody 25x40

RUBBER HOSE FOR ABRASIVE

CODE	DESCRIPTION
360025	Rubber hose for abrasive Ø 13 x 25 per meter
360040	Rubber hose for abrasive Ø 25 x 40 per meter
360048	Rubber hose for abrasive Ø 32 x 48 per meter
360045	Rubber hose for abrasive Ø 30 x 45 per meter





CODE	DESCRIPTION
600-CONTRA	Safety cable for abrasive hose 32x48
6001-CONTRA	Safety cable for abrasive hose 25x40

CODE	DESCRIPTION
101155	Leather gloves for sandblasting cabin door ø200mm length 46cm (pair left / right)
101156	Leather gloves for sandblasting cabin door ø200mm length 60cm (pair left / right)
101157	Leather gloves for sandblasting cabin door ø200mm length 80cm (pair left / right)





CODE	DESCRIPTION
3615100	Sandblaster sieve line Red 100 lt
3615200	Sandblaster sieve line Red 200 lt

BLASTING ACCESSORIES

RCBL-24/20



CODE	DESCRIPTION
450902	RCBL-24/20 nozzle light 24V 20W with cable 5 mt

RCBL-24/100



CODE	DESCRIPTION
450904	RCBL-24/100 manual lamp 24V 100W with cable 5 mt

450906



450909

CODE	DESCRIPTION
450906	RCH-120 Lampholder (without bulb) 24V 120W
450907	Halogen light bulb 24V 120W
450971	LED light bulb 24V 15W
450908	Ceramic holder
450909	Pipe clamp collar

TRANSFORMER



CODE	DESCRIPTION
450910	Transformer 220V 500 VA with 2 outputs 24V
450911	Transformer 220V 500 VA with 4 outputs 24V

JUMPSUIT



CODE	DESCRIPTION
305565	Full blasting overall size 50
305566	Full blasting overall size 52
305567	Full blasting overall size 54
305568	Full blasting overall size 56
305569	Full blasting overall size 58
305570	Full blasting overall size 60

GLOVES



CODE	DESCRIPTION
300900	Crust gloves for sandblasting

BLASTING HELMETS

ACS 951



CODE	DESCRIPTION
300030	Blasting helmet with cape ACS 951 complete
300084	Face mask
300082	Corrugated pipe
300085	Air flow regulator
300083	Filter EOD 55
300087	Glass lens Ø 65x3 mm
300088	Glass lens Ø 65x4 mm
300090	Polycarbonate lens Ø 65 (pkg. 20 pcs)

ACS 952

CODE	DESCRIPTION
300040	Blasting helmet with cape ACS 952 complete
300092	Helmet with collar
300093	Helmet with cape
300082	Cape only
300083	EOD 55 filter
300086	Glass visor 100x140
300089	Polycarbonate visor 100x140 (pkg. 20 pcs)



RC 4



CODE	DESCRIPTION
300010	Blasting mask RC 4 (without filter)
300010V	Aired blasting mask RC 4 (without filter)
300081	Aerosol filter for RC 4
300086	Glass visor 100x140

CLIMA CONTROL

CODE	DESCRIPTION
300095R	Clima control hot air temperature regulator mod. red for sandblasting masks
300095A	Clima control fresh air temperature regulator mod. blue for sandblasting masks
300096	Adapter for Spasciani masks



GUNS AND ACCESSORIES EXPLODED VIEW

AB2 1:1 TWO-COMPONENTS 383
AGITATOR RB-40A 400
AGITATOR RB-FA 399
AH 827 337
AH 2000 338
AM 5008 LVLP 335
AM 6008 348
HG72P 380
HG 74S 371
HG 76 381
HVLP 591 349
LIQUID PRESSURE REDUCER 0-6 BAR 395
LIQUID PRESSURE REDUCER 0-6 BAR RP 397
LIQUID PRESSURE REDUCER 0-50 BAR 396
MASTIC 24E 379
MRS DOUBLE 355
MRS F/R 352
OPTIMA 21 LIGHT 394
OPTIMA 2000 393
OPTIMA 2100 392
ORBITAL SANDER RP-51 401
P 2003 - OUT OF PRODUCTION 368
PRESSURE REDUCER RPR-6S 398
PRO FOREX 382
PRO LIGHT 500 378
R2 R / F 369
R 71 346
R 77 347
R210 1H 353
R210 2H 354
R 715 342
R 775 343
R-2200 AC 389
R 4300 350
RA 60 - RA 80 367
RA 100 360
RA 200 361
RA 210 359
RA 4000 363
RA 4300 362
RAL 100 - RAL 200 364
RAR 100 - RAR 200 365
RAR 1000 - RAR 2000 358
RAR 1001 - RAR 200SI 366
RAR2200AC AUTOMATIC MIX 391
RES12 1:1 TWO-COMPONENTS 384
RL 90 F/R 339
SERIE RAC 357
SGD 71 351
VS 21 386
VS 22 387
VS 23 385
VS 41 LIGHT 388
VS 300 373
VS 360 375
VS 500 372
VS 503 341
VS 603 340
VS 650 377
VS 703 329
VS 720 376
VS 810 344
VS 818 374
VS 820 345
VS 830 330
VS 4300 331
VS 4630N 334
VS 7600 332
VS 7800 333
VSA 81 370
VSPRO-BI 891 356
VS Z3 336
XCITE KREMLIN 390

VS 703

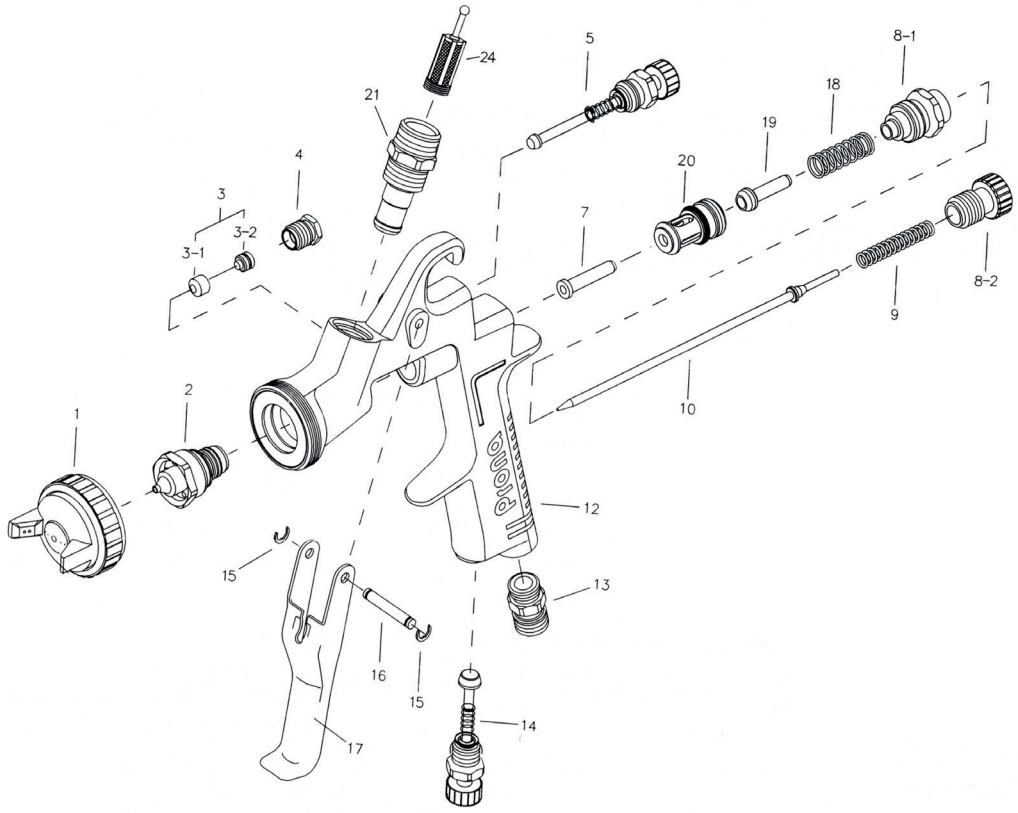

Code	pos.	Description
VS7S4020XX	2 / 10	Fluid nozzle and needle
VS7S40340	3 / 4	Fluid needle gasket and screw
VS7S40500	5	Fan regulation
VS7S40700	7	Needle guide
VS7S40810	8 - 1	Air valve guide
VS7S40820	8 - 2	Needle regulation
VS7S40900	9	Needle spring
VS7S41300	13	Air connection
VS7S41400	14	Air regulation
VS7S41500	15	Seeger
VS7S41600	16	Trigger pin
VS7S41700	17	Trigger
VS7S41800	18	Air valve spring
VS7S41900	19	Air valve
VS7S42000	20	Air valve body complete
VS7S42100	21	Fluid connection
23003	24	Nylon cup filter
VS7S4001XX	1/2/10	Nozzle, needle and air cap kit
RC6RM		Nylon cup 600cc M 16x1.5
RC6RMP		Pressure nylon cup 600cc M 16x1.5
VS7S4010XX		VLSVB2 Air cap
VS7S4011XX		VLSVB1 Air cap
VS7S4012XX		VWS2B Air cap

VS 830

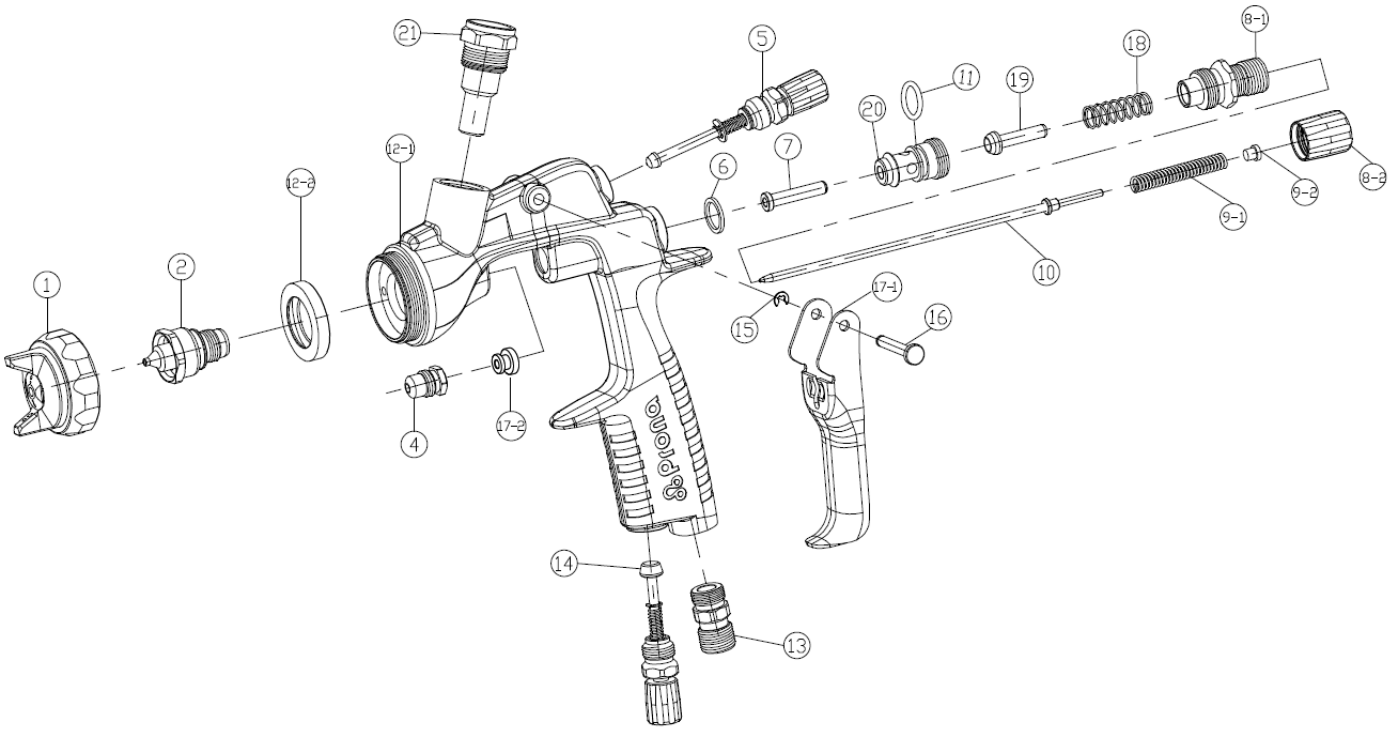

Code	pos.	Description
830R001	1	Air cap
830R2XX	2/10	Nozzle and needle kit
830R004	4	Fluid needle gasket and screw
830R005	5	Fan regulation
830R006	6	Needle guide gasket
830R007	7	Needle guide
830R081	8-1	Air valve guide
830R082	8-2	Needle regulation
830R091	9-1	Needle spring
830R092	9-2	Gasket
830R011	11	O-ring
830R022	12-2	Air cap gasket
830R013	13	Air connection
830R014	14	Air regulation
830R015	15	Seeger
830R016	16	Pin
830R171	17-1	Trigger
830R172	17-2	Trigger guide
830R018	18	Air valve spring
830R019	19	Air valve
830R020	20	Air valve complete body
830R021	21	Fluid inlet connection
RC6RM		Nylon cup 600cc M 16x1.5
RC6RMP		Pressure nylon cup 600cc M 16x1.5
830R1XX	1/2/10	Nozzle, needle and air cap kit

VS 4300

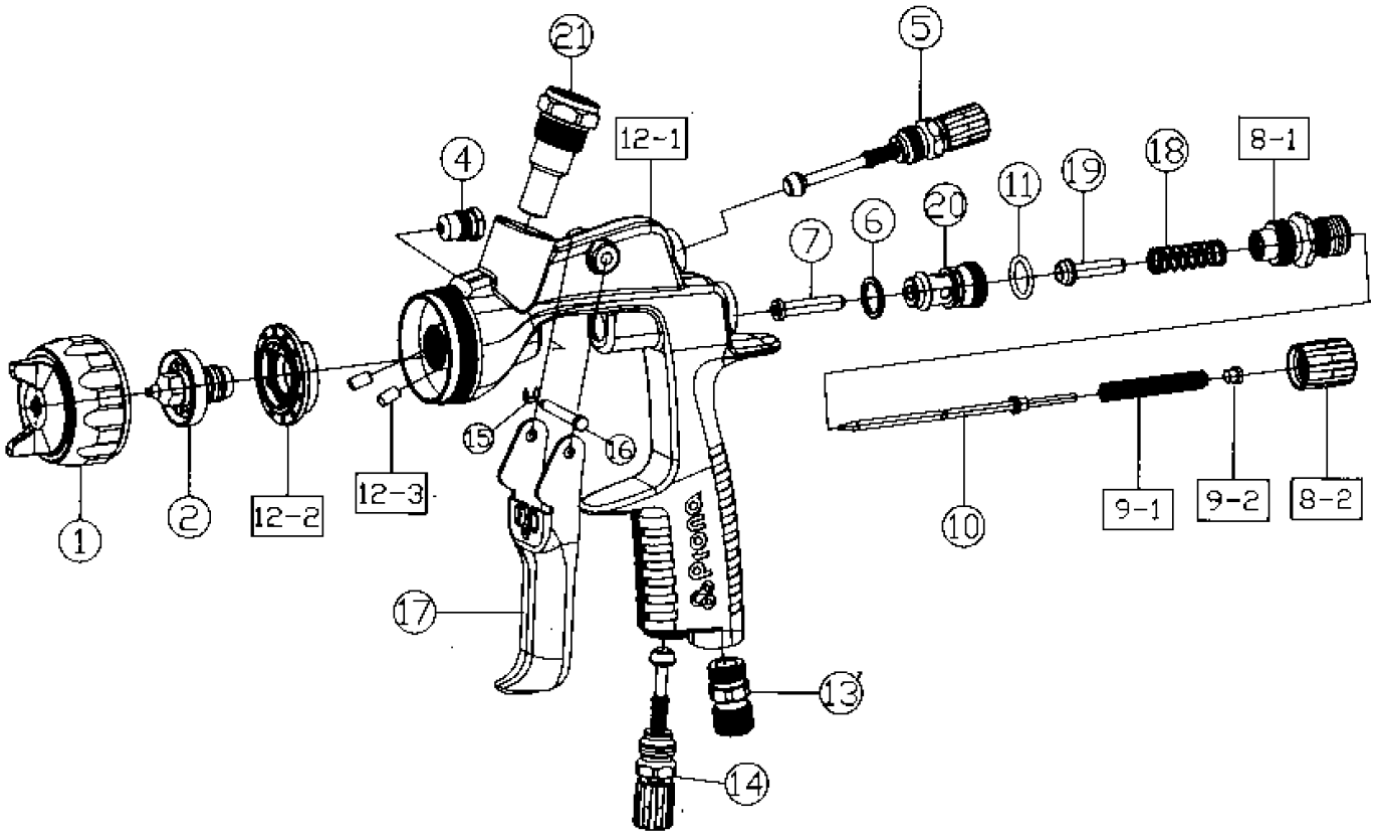

Code	pos.	Description
4300R001	1	Air cap RP - HVLP
4300R1XX	1/2/10	Nozzle, needle and air cap kit
4300R2XX	2/10	Nozzle and needle kit
4300R004	4	Fluid needle gasket and screw
4300R005	5	Fan regulation
4300R006	6	Needle guide gasket
4300R007	7	Needle guide
4300R081	8-1	Air valve guide
4300R082	8-2	Needle regulation
4300R091	9-1	Needle spring
4300R092	9-2	Gasket
4300R011	11	O-ring
4300R132	12-2	Cup Diffuser
4300R142	12-2	Diffuser for pumps
4300R123	12-3	Copper bead
4300R013	13	Air connection
4300R014	14	Air regulation
4300R015	15	Seeger
4300R016	16	Pin
4300R017	17	Trigger
4300R018	18	Air valve spring
4300R019	19	Air valve
4300R020	20	Air valve complete body
4300R021	21	Fluid inlet connection
RC6RM		Nylon cup 600cc M 16x1.5
RC6RMP		Pressure nylon cup 600cc M 16x1.5

VS 7600

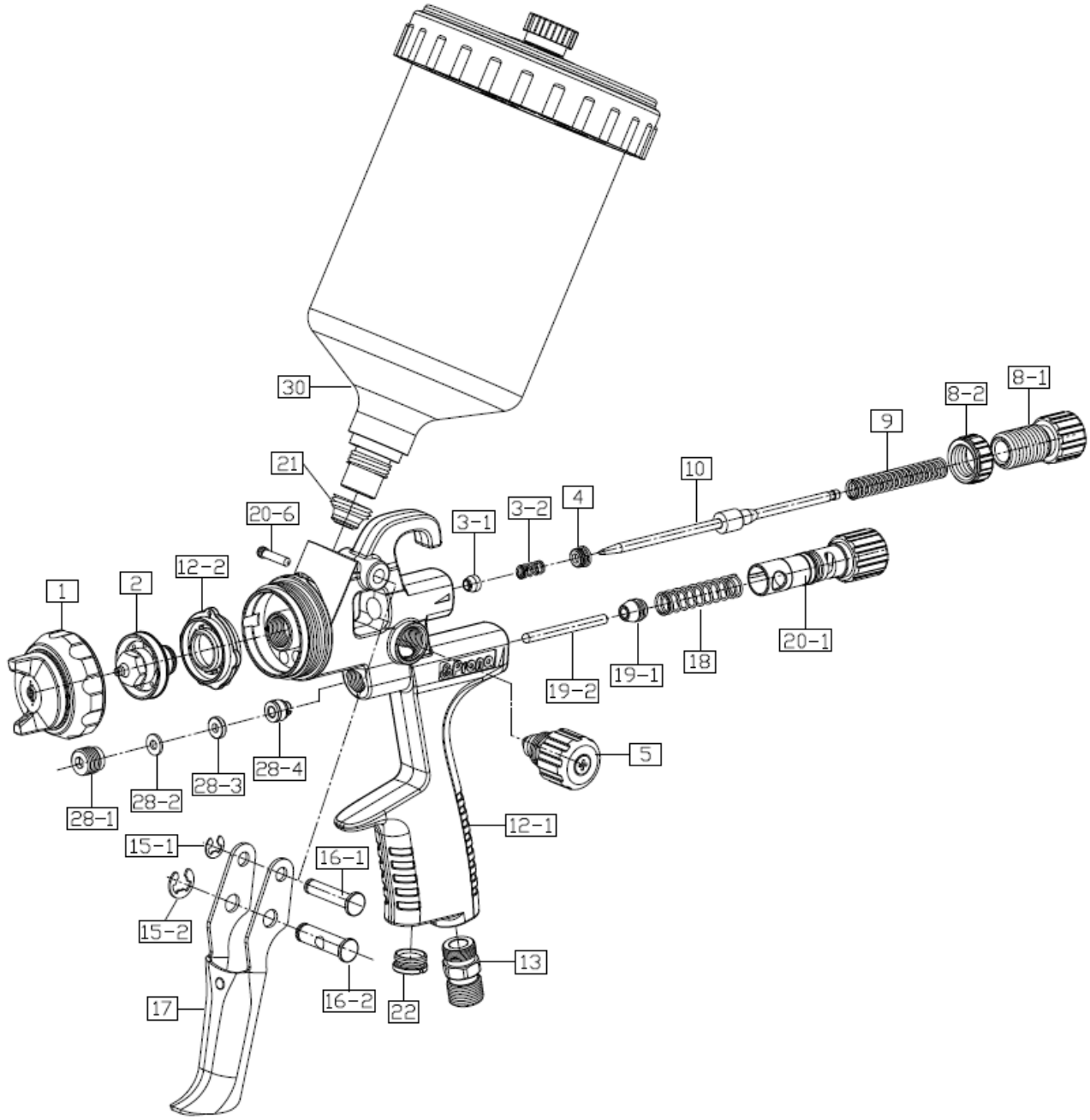

Code	pos.	Description
760R001	1	Air cap
760R1XX	1/2/10	Nozzle kit
760R2XX	2/10	Fluid nozzle and needle
760R031	3-1	Fluid needle screw
760R032	3-2	Fluid needle screw Spring
760R004	4	Fluid needle screw spin
760R005	5	Fan regulation valve
760R081	8-1	Fan regulation valve guide
760R082	8-2	Needle regulation
760R091	9	Needle spring
760R132	12-2	Diffuser
760R013	13	Air Inlet
760R151	15-1	Seeger E4
760R152	15-2	Seeger E6

Code	pos.	Description
760R161	16-1	Superior trigger pin E4
760R162	16-2	Inferior trigger pin E6
760R017	17	Trigger
760R018	18	Air valve spring
760R191	19-1	Air valve
760R192	19-2	Air valve pin
760R201	20-1	Air regulator
760R206	20-6	Fixing pin
760R022	22	Cap
760R281	28-1	Air valve locking
760R282	28-2	Air pin gasket 1
760R283	28-3	Air pin gasket 2
760R284	28-4	Air pin guide
RC6RM	30	Nylon Cup 600cc M 16x1.5

VS 7800

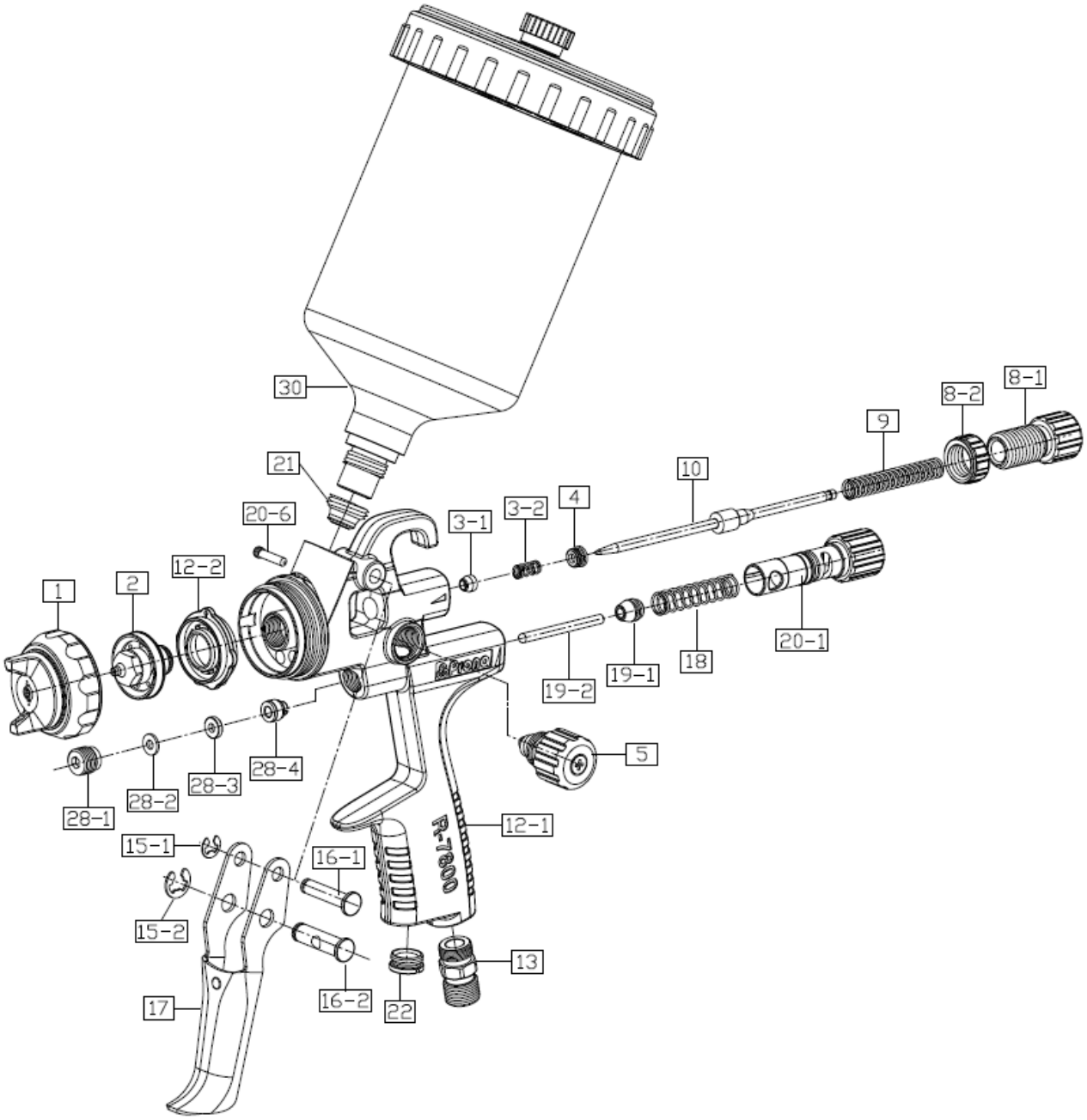

Code	pos.	Description
780R001	1	Air Cap
780R1XX	1/2/10	Nozzle Kit
780R2XX	2/10	Fluid nozzle and needle
780R031	3-1	Fluid needle screw
780R032	3-2	Fluid needle screw Spring
780R004	4	Fluid needle screw spin
780R005	5	Fan regulation valve
780R081	8-1	Fan regulation valve guide
780R082	8-2	Needle regulation
780R091	9	Needle spring
780R132	12-2	Diffuser
780R013	13	Air Inlet
780R151	15-1	Seeger E4
780R152	15-2	Seeger E6

Code	pos.	Description
780R161	16-1	Superior trigger pin E4
780R162	16-2	Inferior trigger pin E6
780R017	17	Trigger
780R018	18	Air valve spring
780R191	19-1	Air valve
780R192	19-2	Air valve pin
780R201	20-1	Air regulator
780R206	20-6	Fixing pin
780R022	22	Cap
780R281	28-1	Air valve locking
780R282	28-2	Air pin gasket 1
780R283	28-3	Air pin gasket 2
780R284	28-4	Air pin guide
RC6RM	30	Nylon Cup 600cc M 16x1.5

VS 4630N

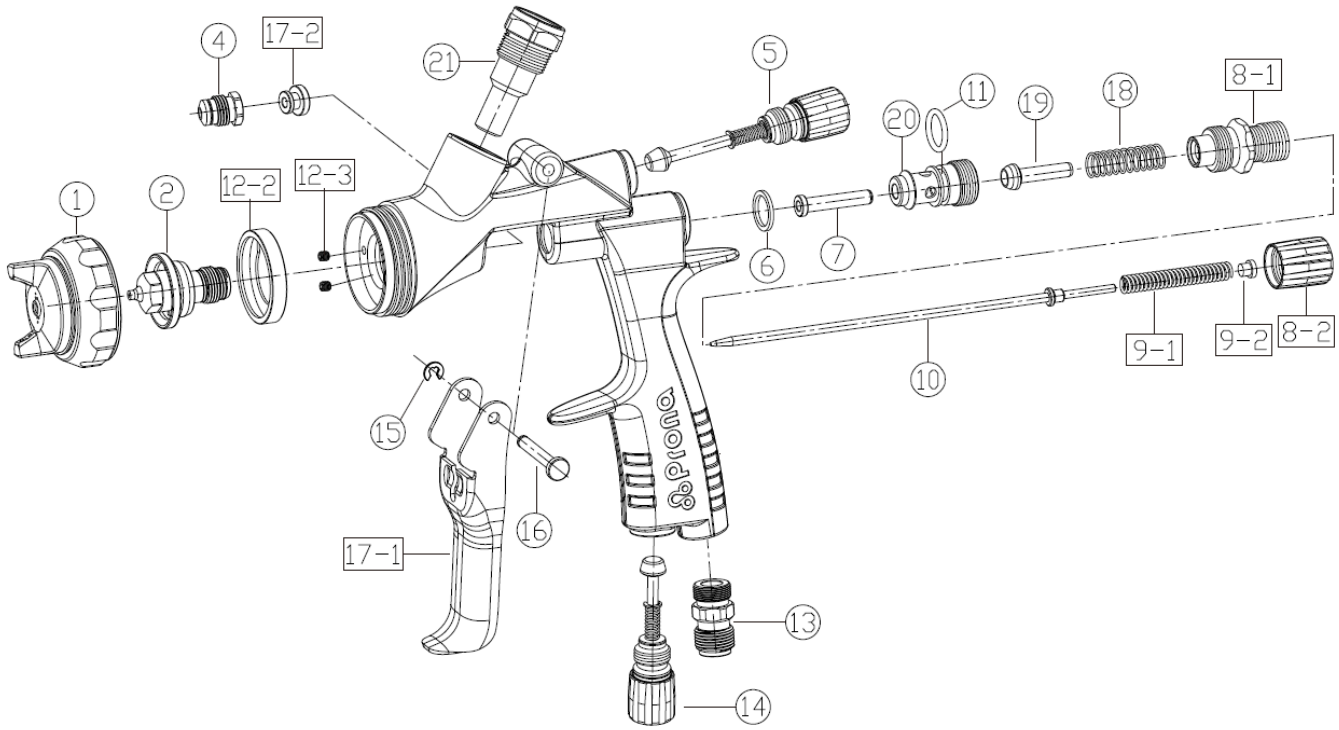

Code	pos.	Description
460R001	1	Air Cap
460R1XX	1/2/10	Nozzle kit
460R2XX	2/10	Nozzle fluid and needle
460R004	4	Fluid needle screw
460R005	5	Fan regulation valve
460R006	6	Needle guide Gasket
460R007	7	Needle Guide
460R081	8-1	Air Valve Guide
460R082	8-2	Needle regulation
460R091	9-1	Needle spring
460R092	9-2	Needle spring gasket
460R011	11	O-ring
460R132	12-2	Diffuser
460R123	12-3	Copped bead
460R013	13	Air Inlet
460R014	14	Air regulation valve
460R015	15	Seeger
460R016	16	Pin
460R171	17-1	Trigger
4300R018	18	Air valve Spring
4300R019	19	Air valve
4300R020	20	Complete air valve body
RC6RM		Nylon cup 600cc M 16x1.5

AM 5008 LVLP

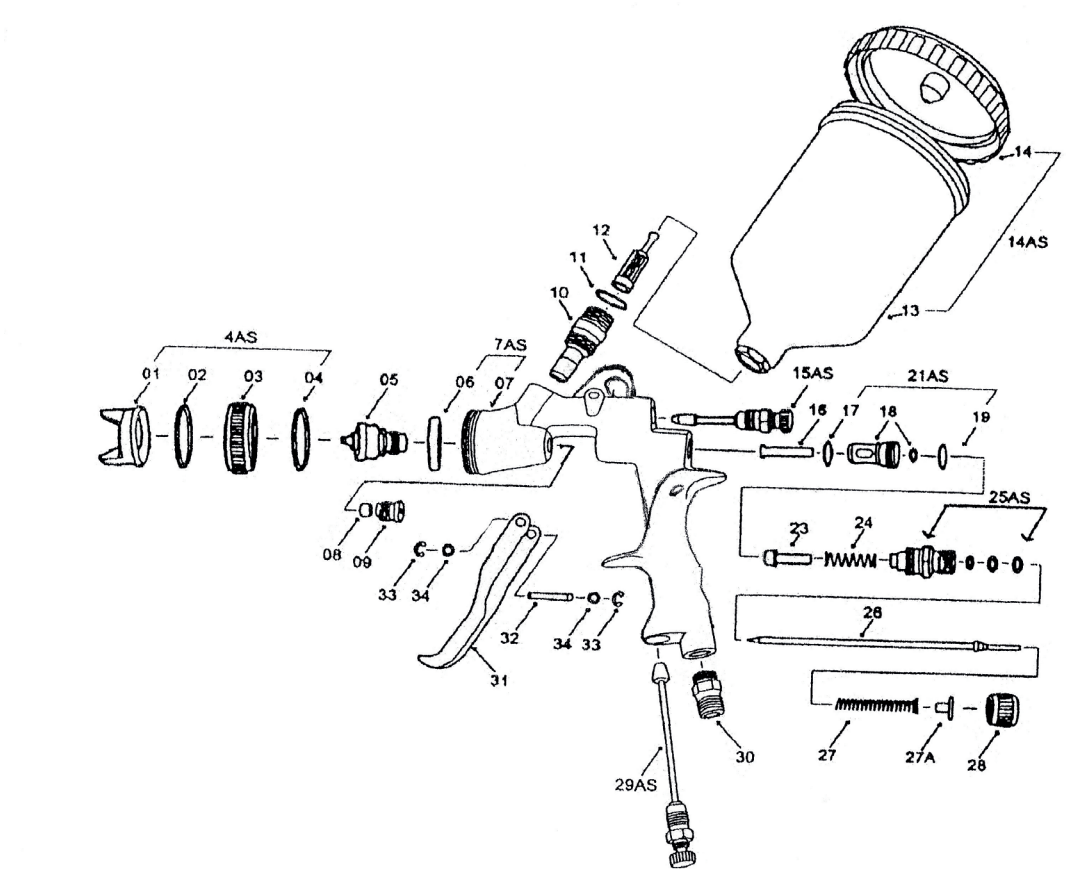

Code	pos.	Description
508L1XX	1/2/3/4	Air Nozzle
508L2XX	5/26	Fluid nozzle and needle
508L006	6	Aluminium gasket
508L008	8	Needle gaskets kit
508L009	9	Needle screw gaskets
508L010	10	Fluid connector
508L011	11	O-ring
23003	12	Nylon filter superior tank
RARC6R	14AS	Nylon superior Tank 600 cc.
508L015	15AS	Fan regulation
508L016	16	Air valve needle
508L017	17	O-ring
508L018	18	Air valve Body
508L019	19	O-ring
508L023	23	Air Valve
508L024	24	Air valve spring
508L025	25AS	Complete needle guide
608PL017	27	Needle spring
608PL018	27A	Needle spring support
608PL019	28	Needle Regulation
508L029	29AS	Air Regulation
608PL022	30	Air connector
608PL024	31	Trigger
608PL025	32	Trigger pin
608PL027	33	Seeger trigger
608PL026	34	Trigger washer
508L3XX	1/2/3/4/5/26	Nozzle kit

VS Z3

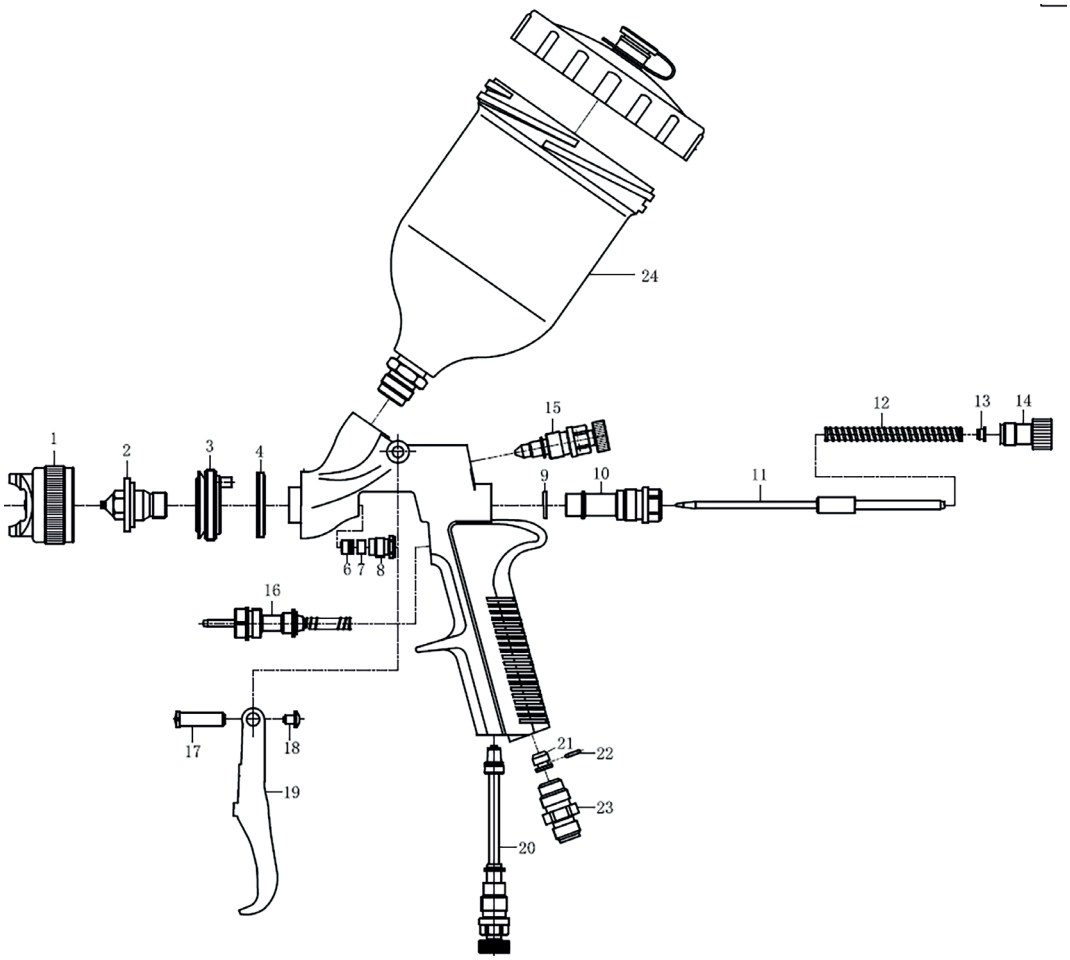

Code	pos.	Description
Z3R001	1	Air Cap
Z3RK1XX	1/2/11	Nozzle, needle and air cap kit
Z3RK2XX	2/11	Fluid nozzle and needle kit
Z3R0003	3	Diffuser
Z3R0004	4	Air Cap Gasket
Z3R0006	6/7/8	Fluid needle gasket and screw
Z3R0009	9	Gasket
Z3R0010	10	Needle guide
Z3R0012	12/13/14	Needle spring set
Z3R0015	15	Fan regulation valve
Z3R0016	16	Air Valve
Z3R0017	17/18/19	Trigger Kit
Z3R0020	20	Air regulation
Z3R0021	21/22/23	Air inlet
Z3R0024	24	Nylon cup 600cc
Z3R0024P	24	Pressure nylon cup 600cc

AH 827

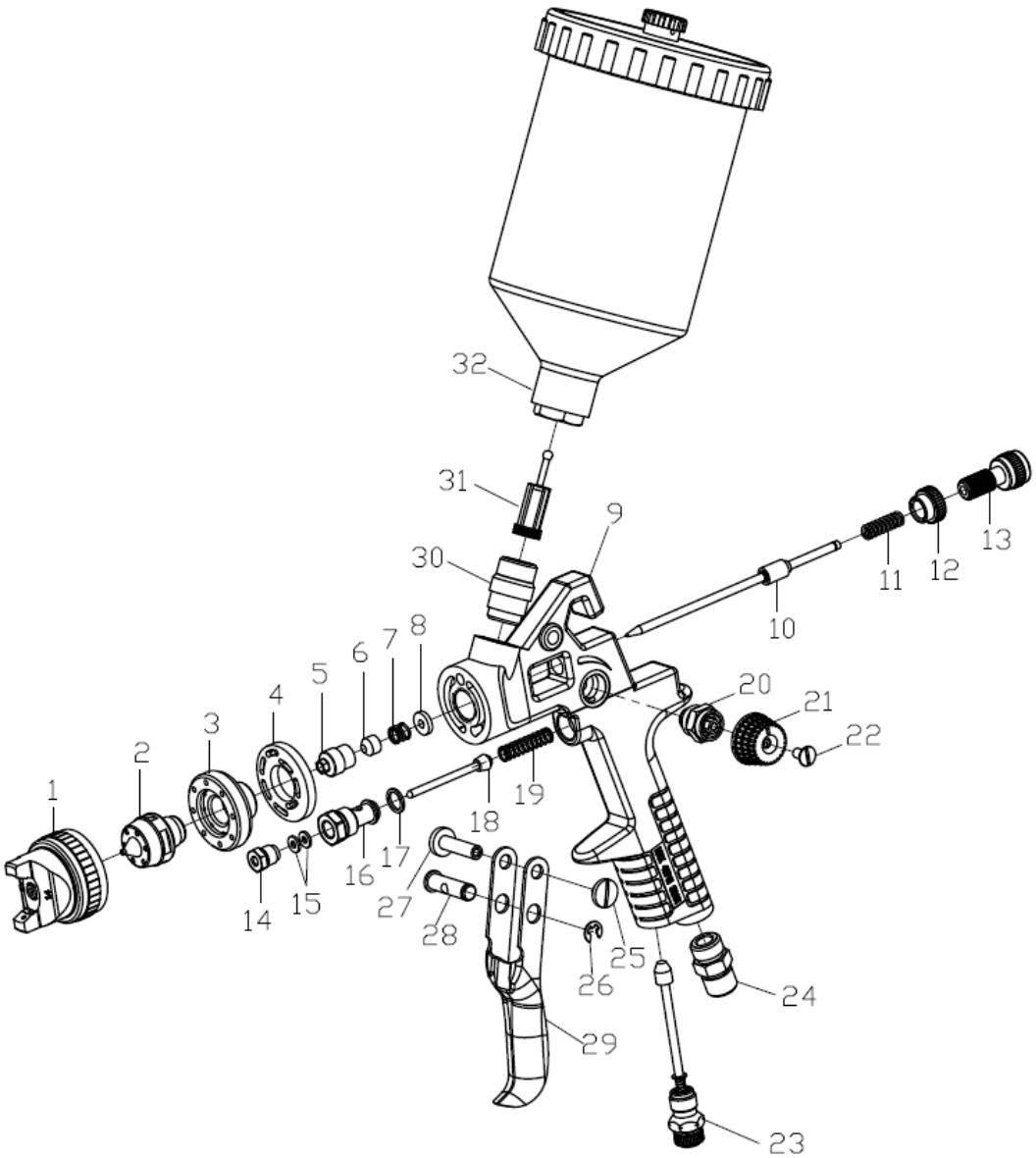

Code	pos.	Description
8274XX	1/2/10	Nozzle, needle and air cap kit
827009	3	Diffuser
827010	4	Gasket
827005	5	Fluid needle gasket screw
827006	6	Fluid needle gasket
827008	7	Spring
827007	8	Washer
827017	11	Needle spring
827018	12	Needle guide
827018A	13	Needle regulation
827013A	14/15/16 17/18/19	Complete air valve
827015B	20/1	Fan regulation
82715A	22	Fan regulation screw

Code	pos.	Description
827033	23	Air regulation
827026	24	Air inlet connection
827024	25/27	Trigger pin
827025	26/28	Bottom trigger pin
827023	29	Trigger
827011	30	Cup connection
23003	31	Nylon cup filter
RARC6R827	32	Nylon cup 600 cc
RAR10A	32	Aluminium cup 800cc
RARC6RP	32	Pressure nylon cup 600 cc

AH 2000

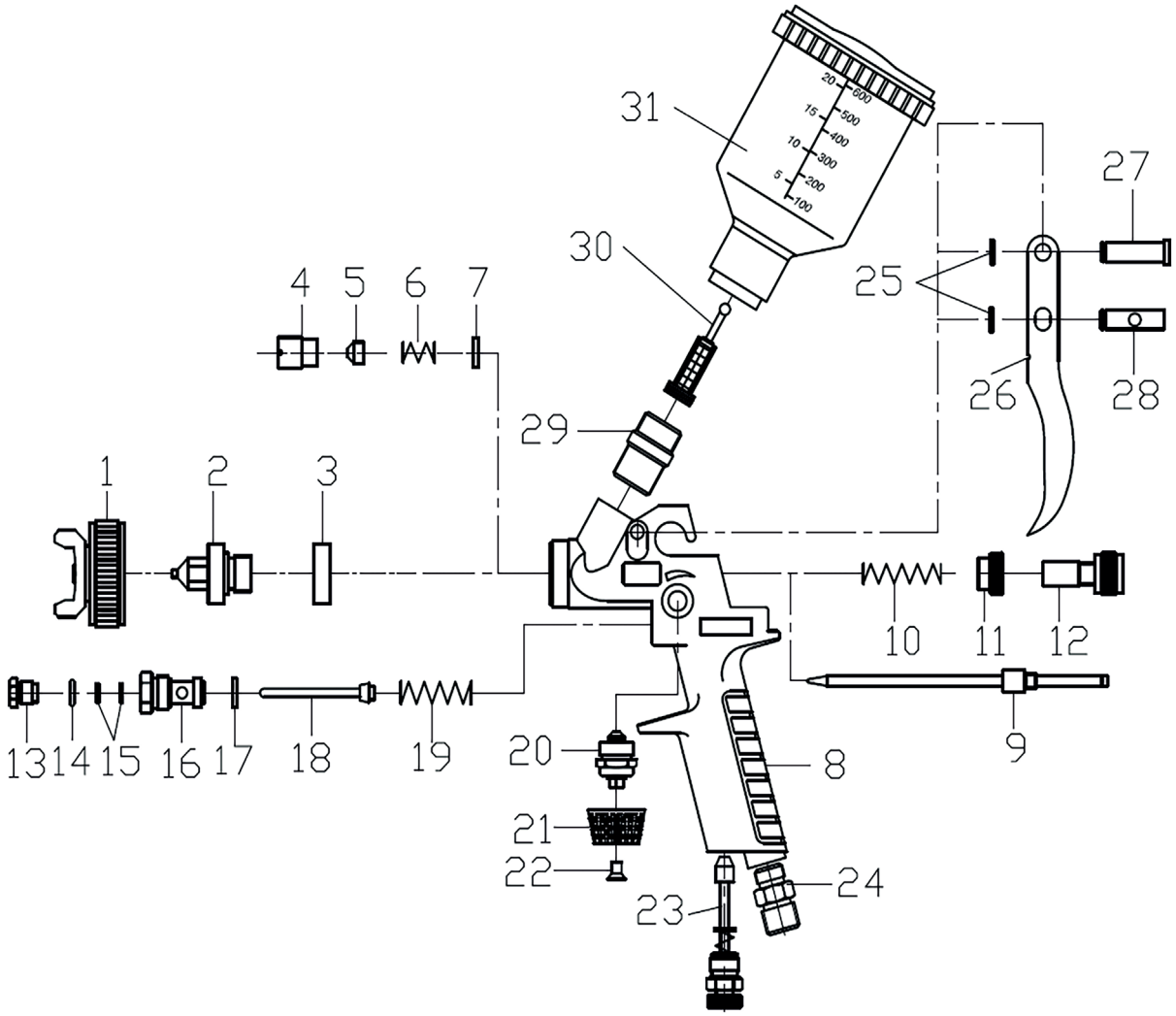

Code	pos.	Description
8284XX	1/2/10	Nozzle, needle and air cap kit
828007	3	Diffuser
828008	4/5/6/7	Fluid needle gasket and screw
828020	10	Needle spring
828019	11/12	Needle regulation
828022	13/14/15/16 17/18/19	Complete air valve
828034	20	Fan regulation
828029	21	Fan regulation knob
828028	22	Fan regulation screw
828042	23	Air regulation
828035	24	Air inlet connection

Code	pos.	Description
828014	25	Seeger
828013	26	Trigger
828015	27	Trigger pin
828016	28	Bottom trigger pin
828010	29	Cup connection
23003	30	Nylon cup filter
828012A	31	Nylon cup 125cc

RL 90 F/R

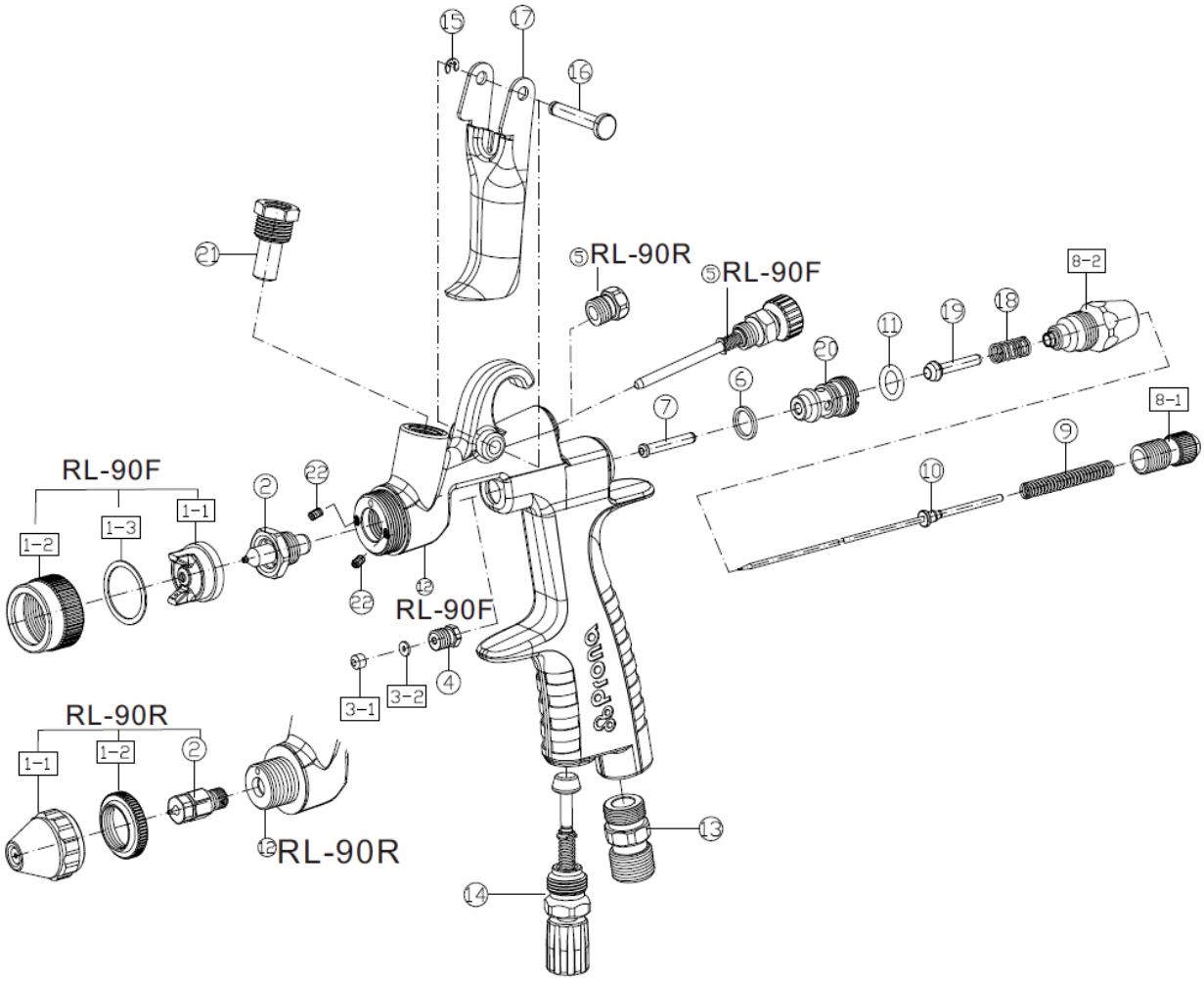

Code	pos.	Description
RL90KFXX	1/2/10	Nozzle kit RL 90F
RL90KRXX	1/2/10	Nozzle kit RL 90R
RL90NXX	2/10	Fluid nozzle and needle kit
RL90031	3-1	Fluid nozzle gasket 1
RL90032	3-2	Fluid nozzle gasket 2
RL90004	4	Fluid needle gasket and screw
RL9005F	5F	Fan regulation valve
RL9005R	5R	Locking nut
RL90006	6	Needle guide gasket
RL90007	7	Needle guide
RL90081	8-1	Air valve guide
RL90082	8-2	Needle regulation
RL90009	9	Needle spring
RL90011	11	Gasket

Code	pos.	Description
RL90013	13	Air inlet connection
RL90014	14	Air regulation
RL90015	15	Seeger
RL90016	16	Trigger pin
RL90017	17	Trigger
RL90018	18	Air valve spring
RL90019	19	Air valve
RL90020	20	Air valve body
RL90021	21	Fluid inlet
RL90022	22	S. steel bead
RL9001F	1F	Air Cap F
RL9001R	1R	Air Cap R
RC-51M00		Tazza in nylon 150 cc
23004		Nylon cup 150 cc

VS 603

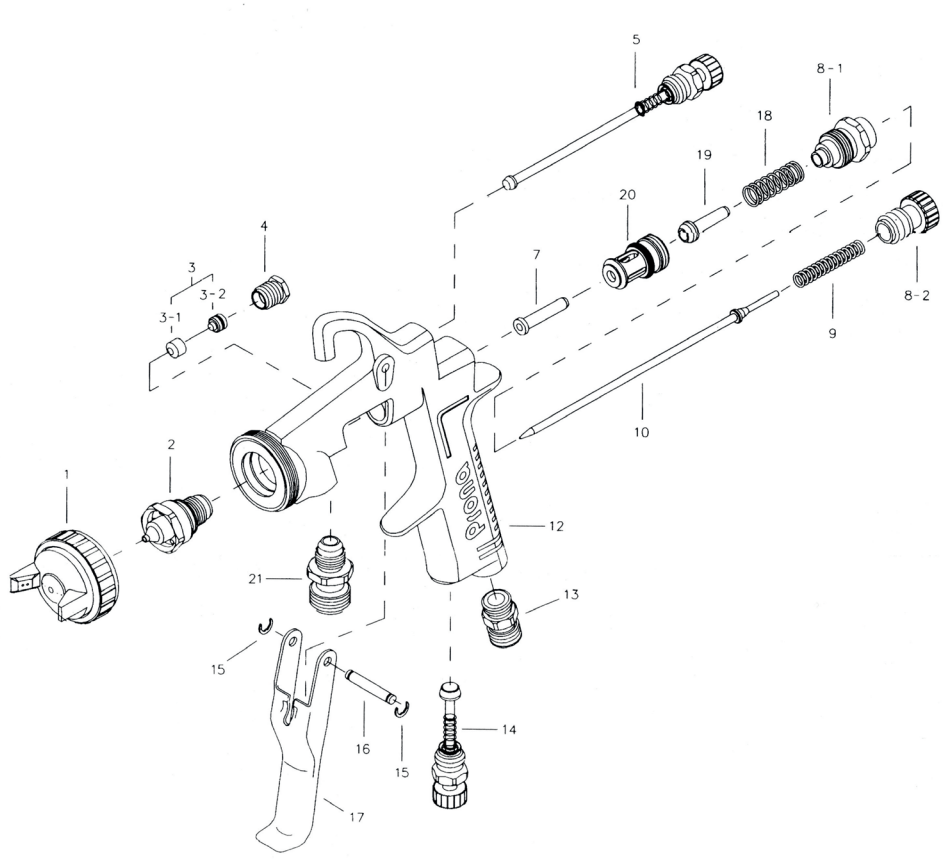

Code	pos.	Description
VS6P2020XX	2 / 10	Nozzle and needle kit
VS6P20340	3 / 4	Fluid needle gasket and screw
VS6P20500	5	Fan regulation
VS6P20700	7	Needle guide
VS6P20810	8 - 1	Air valve guide
VS6P20820	8 - 2	Needle regulation
VS6P20900	9	Needle guide
VS6P21300	13	Air inlet connection
VS6P21400	14	Air regulation
VS6P21500	15	Seeger
VS6P21600	16	Trigger pin
VS6P21700	17	Trigger
VS6P21800	18	Air valve spring
VS6P21900	19	Air valve
VS6P22000	20	Complete Air valve body
VS6P22100	21	Fluid inlet
VS6P2001XX	1/2/10	Nozzle, needle and air cap kit
VS6P2010XX		VGS2BP Air nozzle
VS6P2011XX		VLSVB2 Air nozzle
VS6P2012XX		VKS2B Air nozzle
VS6P2013XX		VRS2B Air nozzle
VS6P2014XX		VWS2B Air nozzle
VS6P201RXX		Air nozzle ROUND

VS 503

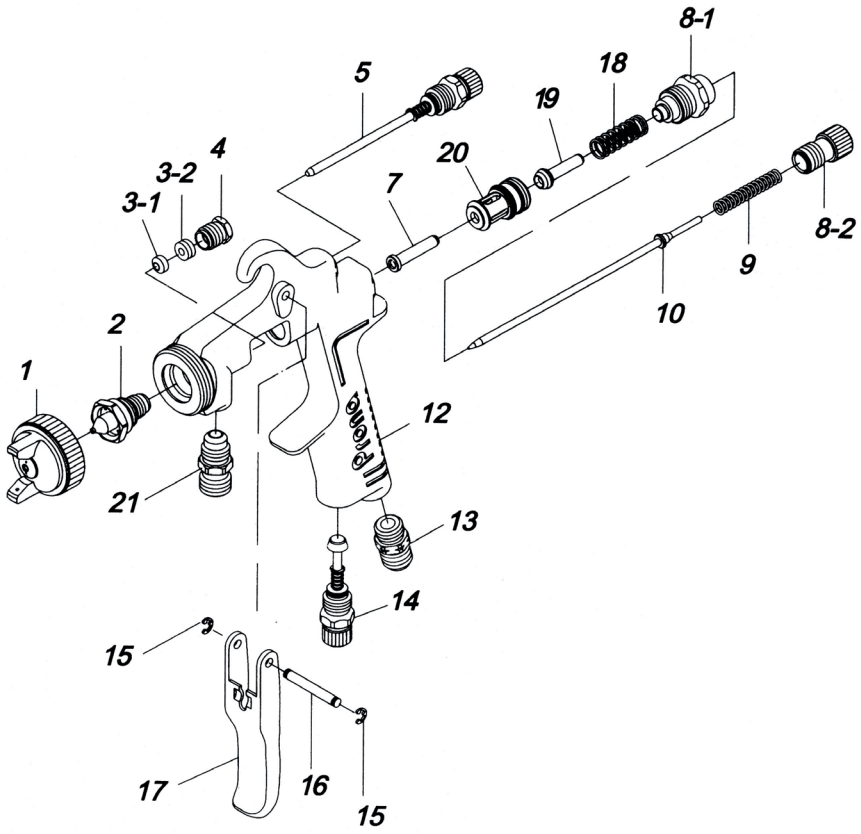

Code	pos.	Description
VS5P1020XX	2 / 10	Nozzle and needle kit
VS5P10340	3 / 4	Fluid needle gasket and screw
VS5P10500	5	Fan regulation
VS5P10700	7	Needle guide
VS5P10810	8 - 1	Air valve guide
VS5P10820	8 - 2	Needle regulation
VS5P10900	9	Needle guide
VS5P11300	13	Air inlet connection
VS5P11400	14	Air regulation
VS5P11500	15	Seeger
VS5P11600	16	Trigger pin
VS5P11700	17	Trigger
VS5P11800	18	Air valve spring
VS5P11900	19	Air valve
VS5P12000	20	Complete Air valve body
VS5P12100	21	Fluid inlet
VS5P1001XX	1/2/10	Nozzle, needle and air cap kit
VS5P1010XX		VES2P Air nozzle
VS5P1011XX		VHS2B Air nozzle
VS5P1013XX		VNS2B Air nozzle
VS5P101RXX		Air nozzle ROUND

R 715

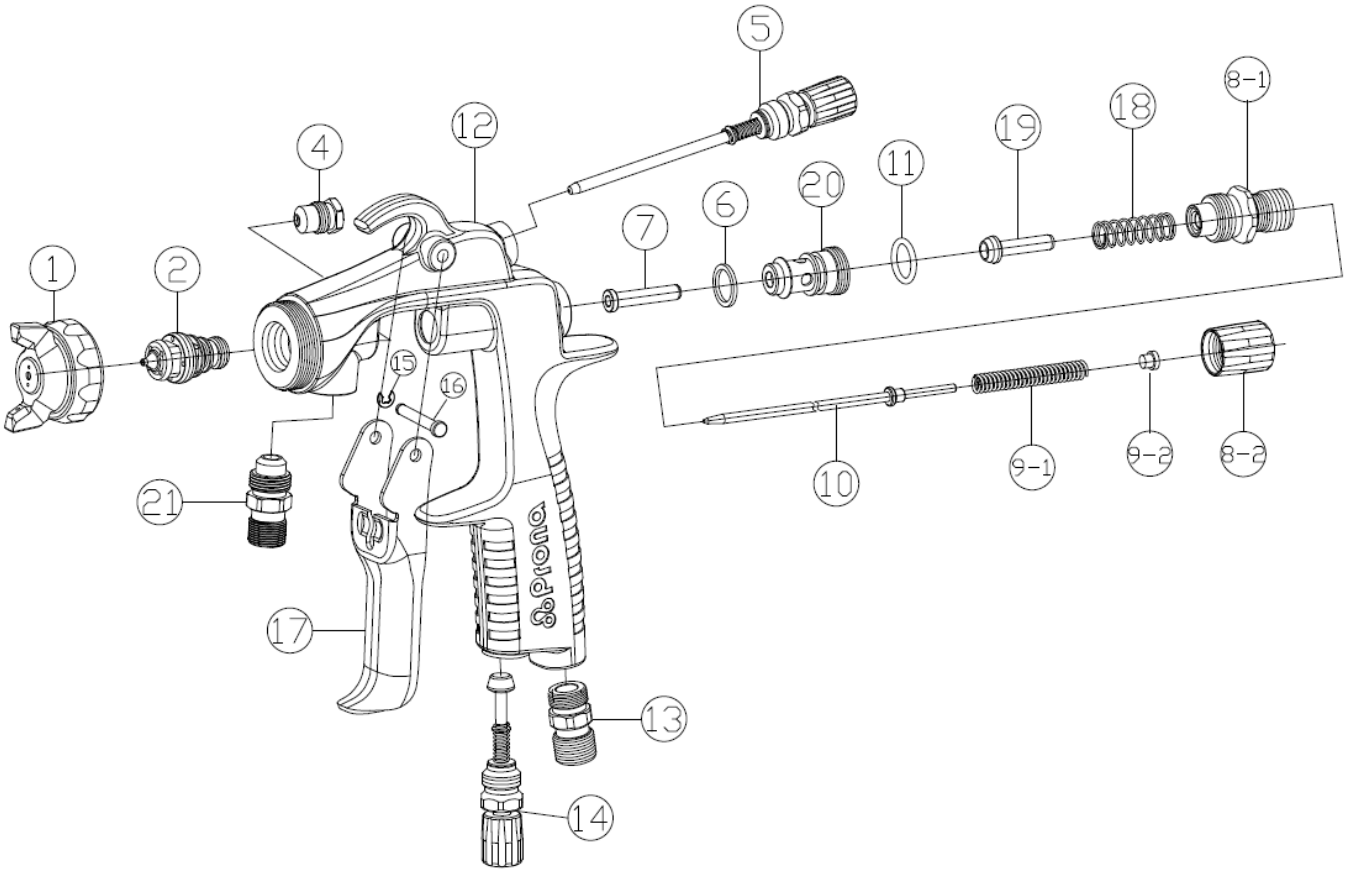

Code	pos.	Description
715R001	1	Air Cap
715R1XX	1/ 2 / 10	Nozzle, needle and air cap kit
715R2XX	2 / 10	Nozzle and needle kit
715R004	4	Fluid needle gaket and screw
715R005	5	Fan regulation valve
715R006	6	Air valve guide gasket
715R007	7	Air valve guide
715R081	8-1	Air valve Guid
715R082	8-2	Needle regulation
715R091	9-1	Needle guide
715R092	9-2	Gasket
715R011	11	O-ring
715R013	13	Air inlet
715R014	14	Air regulation
715R015	15	Seeger
715R016	16	Trigger pin
715R171	17-1	Trigger
715R018	18	Air valve spring
715R019	19	Air valve
715R020	20	Complete Air valve body
715R021	21	Fluid inlet

R 775

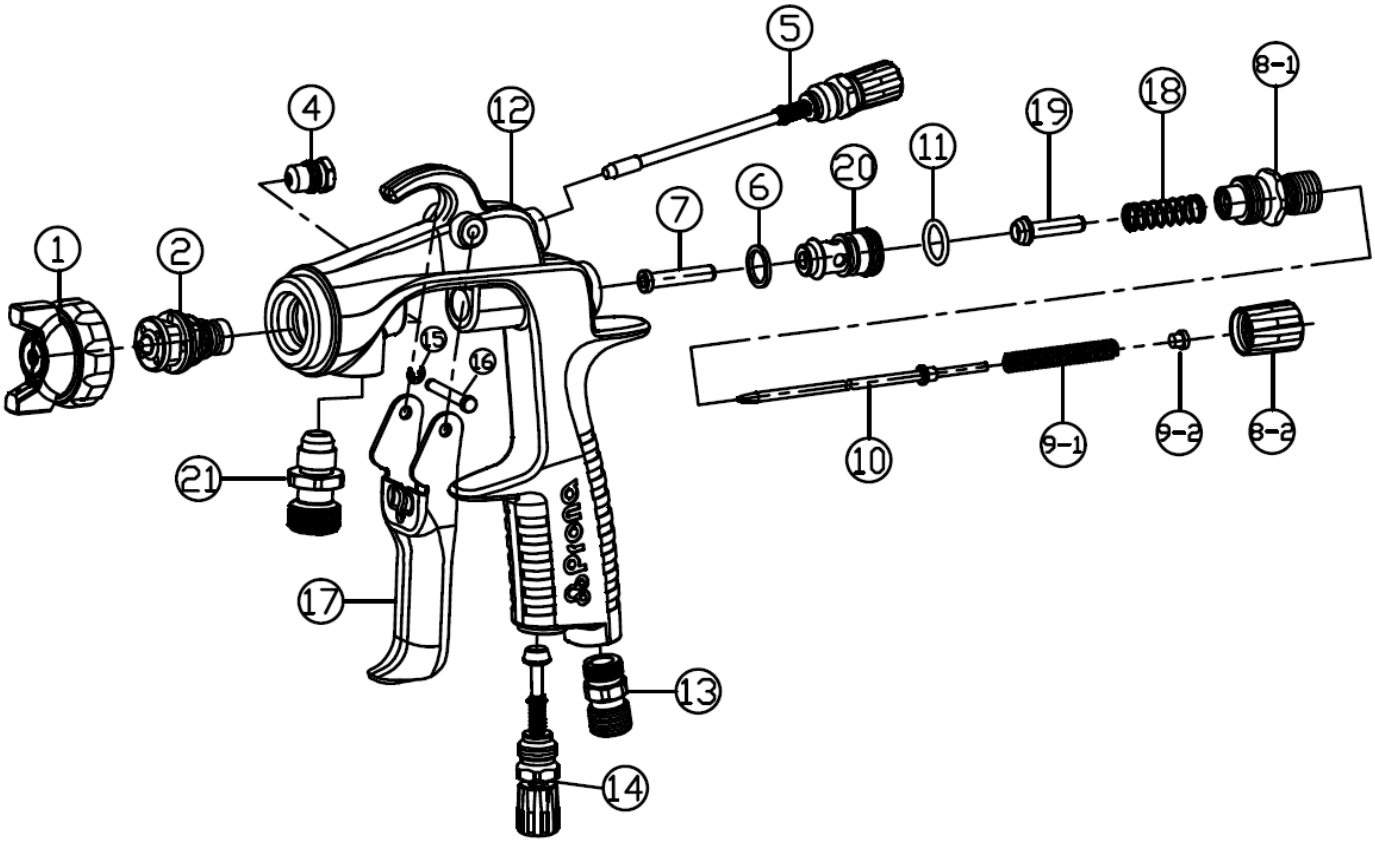

Code	pos.	Description
775R001	1	Air Cap
775R1XX	1/ 2 / 10	Nozzle, needle and air cap kit
775R2XX	2 / 10	Nozzle and needle kit
775R004	4	Fluid needle gasket and screw
775R005	5	Valvola Fan regulation
775R006	6	Air valve guide gasket
775R007	7	Needle guide
775R081	8-1	Air valve guide
775R082	8-2	Needle regulation
775R091	9-1	Needle spring
775R092	9-2	Gasket
775R011	11	O-ring
775R013	13	Air inlet
775R014	14	Air regulation
775R015	15	Seeger
775R016	16	Trigger pin
775R171	17-1	Trigger
775R018	18	Air valve spring
775R019	19	Air valve
775R020	20	Complete Air valve body
775R021	21	Fluid inlet

VS 810

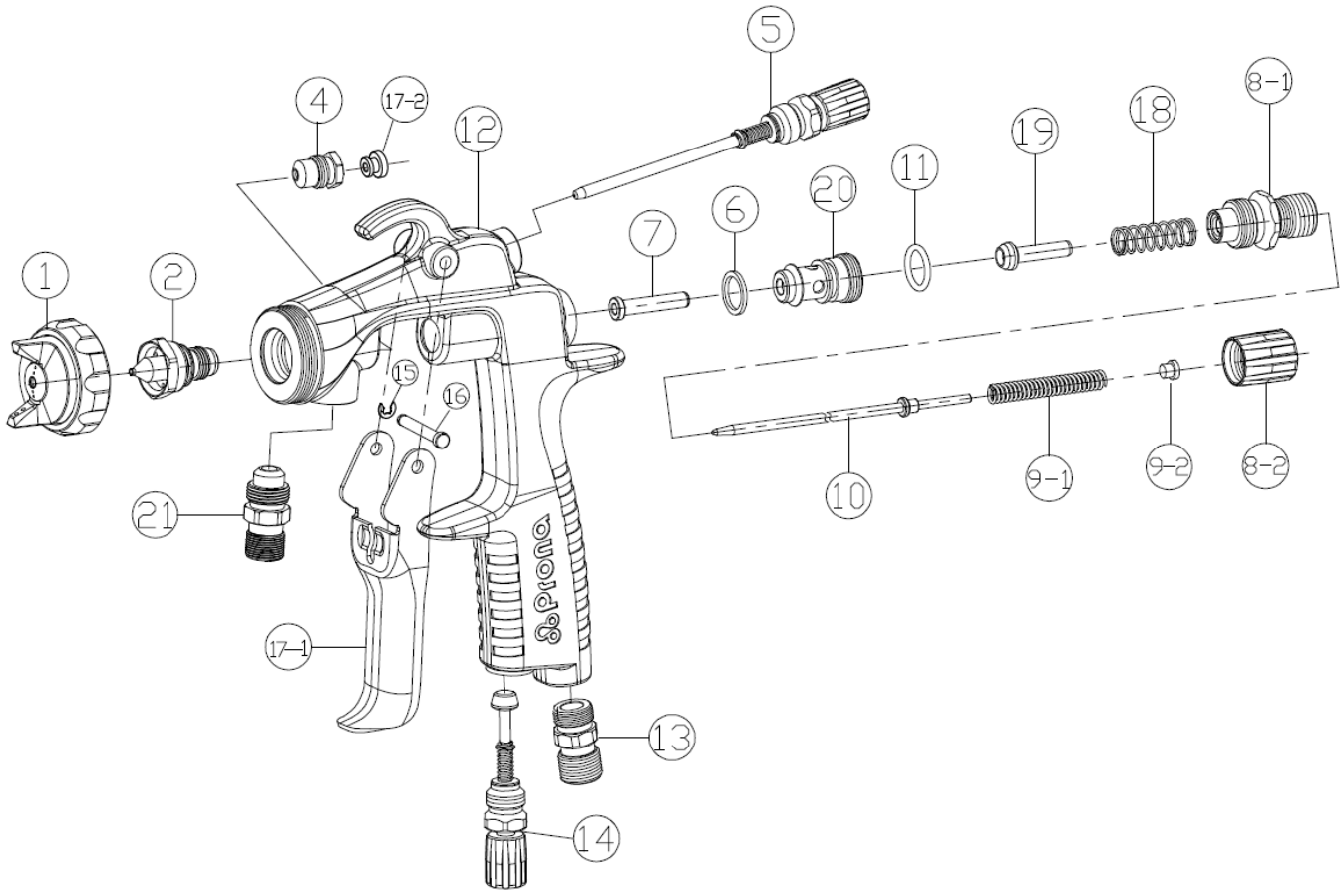

Code	pos.	Description
810R001	1	Air Cap
810R1XX	1/ 2 / 10	Nozzle, needle and air cap kit
810R2XX	2 / 10	Nozzle and needle kit
810R004	4	Fluid needle gasket and screw
810R005	5	Fan regulation
810R006	6	Needle Guide gasket
810R007	7	Air valve guide
810R081	8-1	Air valve guide
810R082	8-2	Needle regulation
810R091	9-1	Needle spring
810R092	9-2	Gasket
810R011	11	O-ring
810R013	13	Air inlet
810R014	14	Air regulation
810R015	15	Seeger
810R016	16	Trigger pin
810R171	17-1	Trigger
810R172	17-2	Trigger guide
810R018	18	Air valve spring
810R019	19	Air valve
810R020	20	Air valve body complete
810R021	21	Fluid inlet

VS 820

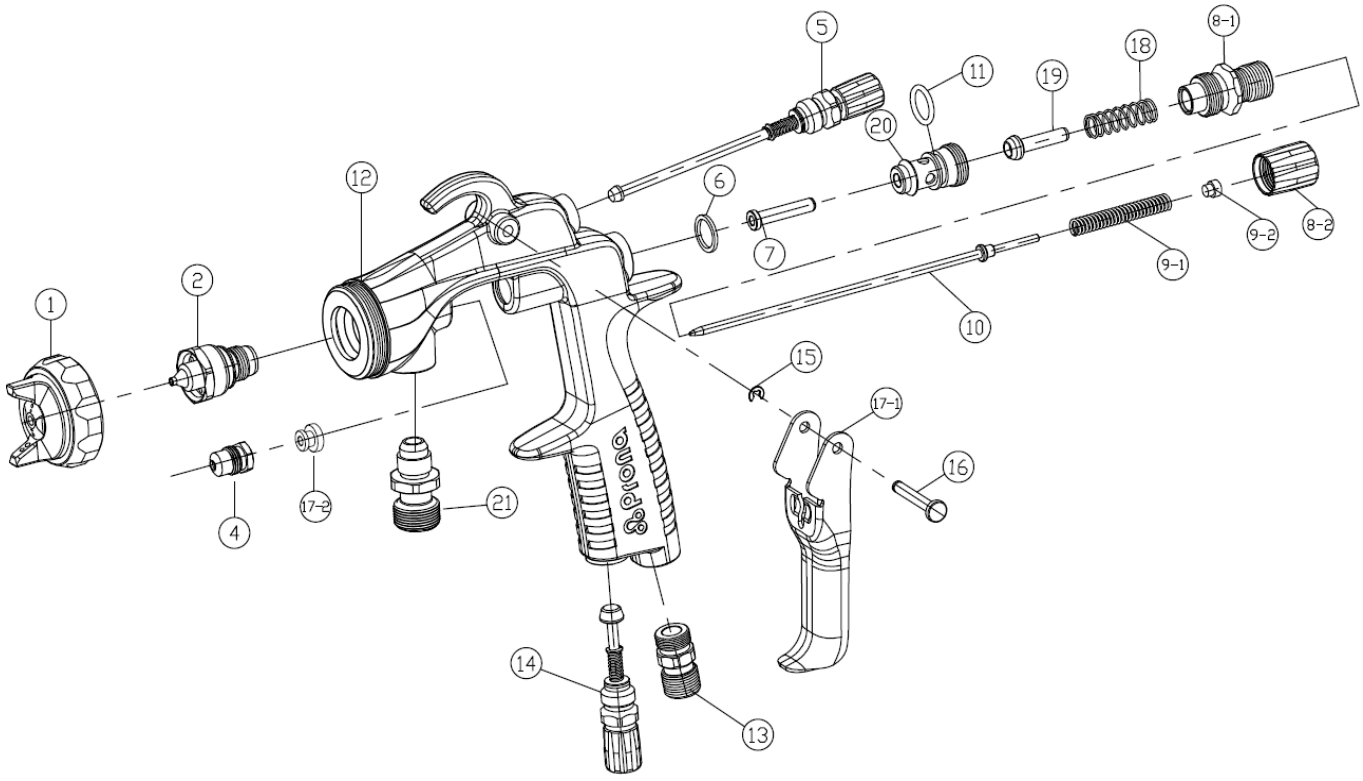

Code	pos.	Description
820R001	1	Air Cap
820R1XX	1/ 2 / 10	Nozzle, needle and air cap kit
820R2XX	2 / 10	Nozzle and needle kit
820R004	4	Fluid needle gasket and screw
820R005	5	Fan regulation
820R006	6	Needle guide gasket
820R007	7	Needle guide
820R081	8-1	Air valve guide
820R082	8-2	Needle regulation
820R091	9-1	Needle spring
820R092	9-2	Gasket
820R011	11	O-ring
820R013	13	Air inlet
820R014	14	Air regulation
820R015	15	Seeger
820R016	16	Trigger pin
820R171	17-1	Trigger
820R172	17-2	Trigger guide
820R018	18	Air valve spring
820R019	19	Air valve
820R020	20	Complete Air valve body
820R021	21	Fluid inlet

R 71

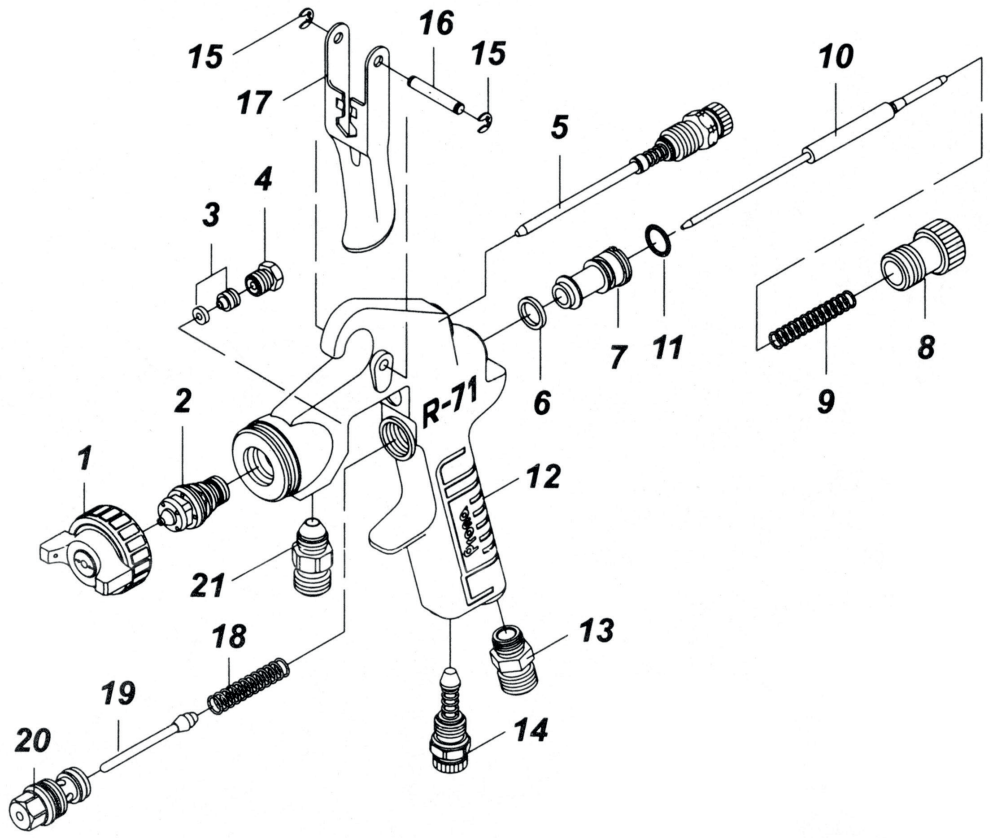

Code	pos.	Description
P7110XX	1	Air nozzle (1,3 / 1,5 / 1,8)
P7120XX	2 / 10	Nozzle and needle kit (1,3 / 1,5 / 1,8)
P71034	3 / 4	Fluid needle gasket and screw
P71050	5	Fan regulation
P71060	6	Needle guide gasket
P71070	7	Needle guide
P71080	8	Needle regulation
P71090	9	Needle spring
P71110	11	Needle guide O-ring
P71130	13	Air inlet
P71140	14	Air regulation
P71150	15	Seeger
P71160	16	Trigger pin
P71170	17	Trigger
P71180	18	Air valve spring
P71190	19	Air valve
P71200	20	Complete Air valve body
P71210	21	Fluid inlet
P7101XX	1 / 2 / 10	Nozzle, needle and air cap kit R 71 (1,3 / 1,5 / 1,8)
P7101XX	1 / 2 / 10	Nozzle, needle and air cap kit R 71 (0,8 / 1,0)
P7110XX	1	Air nozzle (0,8 / 1,0)
P7120XX	2 / 10	Nozzle and needle kit (0,8 / 1,0)

R 77

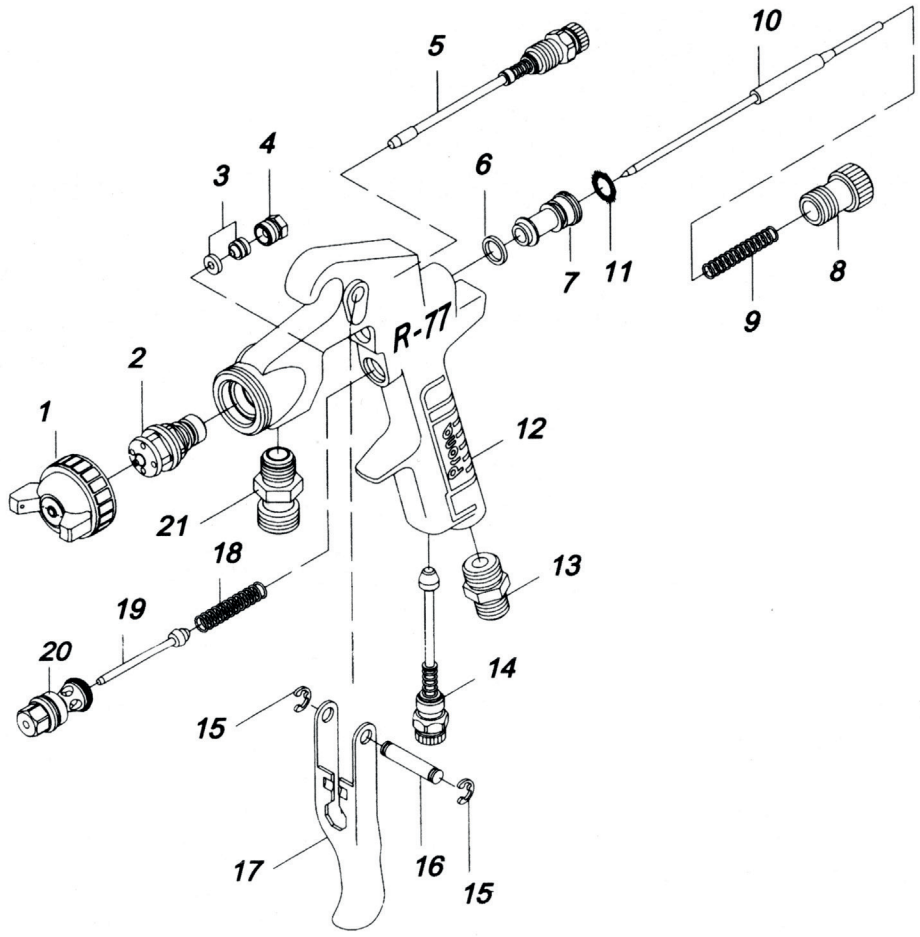

Code	pos.	Description
P7710XX	1	Air nozzle
P7720XX	2 / 10	Nozzle and needle kit
P77034	3 / 4	Fluid needle gasket and screw
P77050	5	Fan regulation
P77060	6	Needle guide gasket
P77070	7	Needle guide
P77080	8	Needle regulation
P77090	9	Needle spring
P77110	11	Needle guide O-ring
P77130	13	Air inlet
P77140	14	Air regulation
P77150	15	Seeger
P77160	16	Trigger pin
P77170	17	Trigger
P77180	18	Air valve spring
P77190	19	Air valve
P77200	20	Complete Air valve body
P77210	21	Fluid inlet
P7701XX	1 / 2 / 10	Nozzle, needle and air cap kit R 77 (1,5/2,0/2,5)
P7701XX	1 / 2 / 10	Nozzle, needle and air cap kit R 77 (1,2/3,0/4,0)

AM 6008

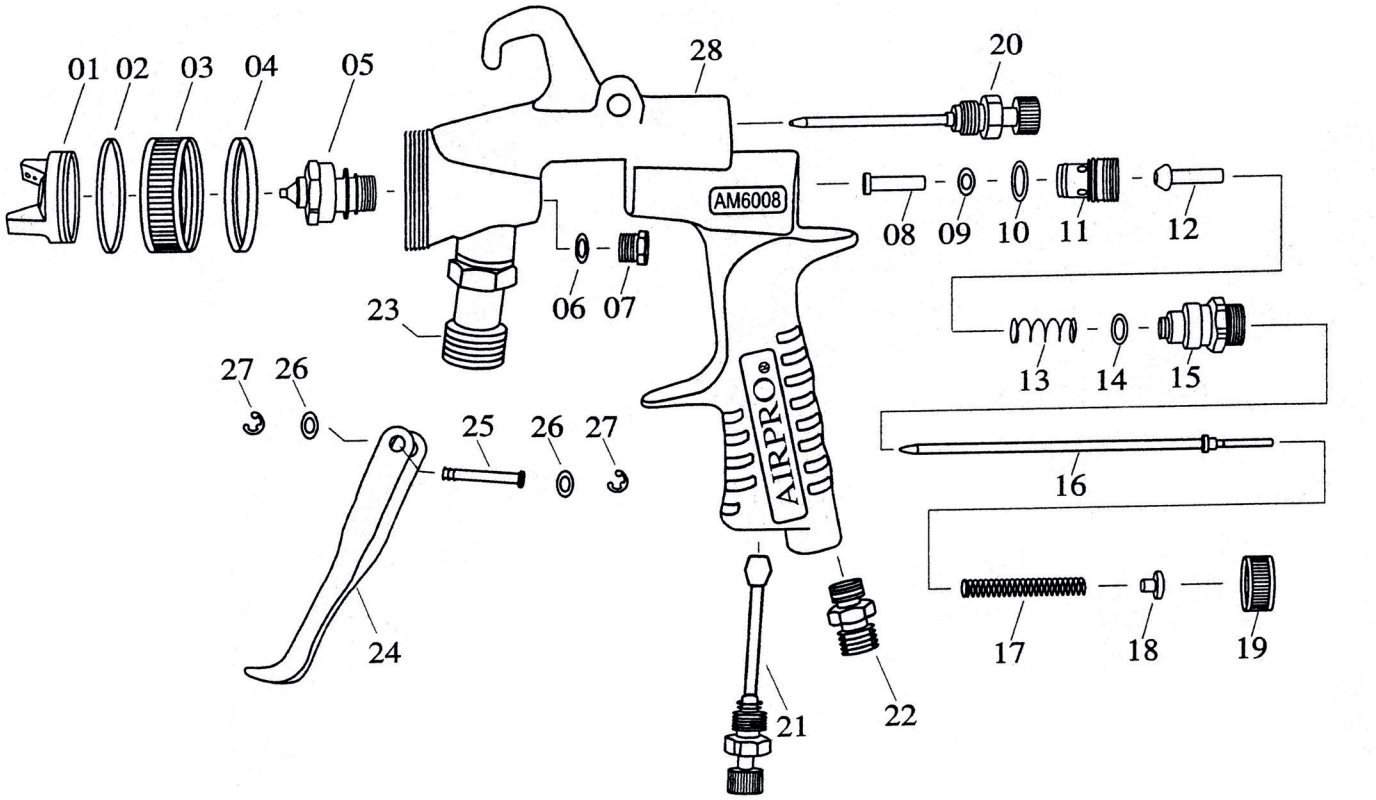

Code	pos.	Description
608PL4XX	1/2/3/4	Air nozzle
608PL2XX	5/16	Nozzle and needle kit
608PL006	6	Fluid needle gasket
608PL007	7	Fluid needle gasket screw
608PL008	8	Air valve guide
608PL009	9	O-ring
608PL010	10	O-ring
608PL011	11	Air valve body complete
608PL012	12	Air valve
608PL013	13	Air valve spring
608PL014	14	O-ring
608PL015	15	Needle guide
608PL017	17	Needle spring
608PL018	18	Needle spring support
608PL019	19	Needle regulation
608PL020	20	Fan regulation
608PL021	21	Air regulation
608PL022	22	Air inlet
608PL023	23	Fluid inlet
608PL024	24	Trigger
608PL025	25	Trigger pin
608PL026	26	Trigger washer
608PL027	27	Trigger Seeger
608PL3XX	1/2/3/4/5/16	Nozzle, needle and air cap kit

HVLP 591

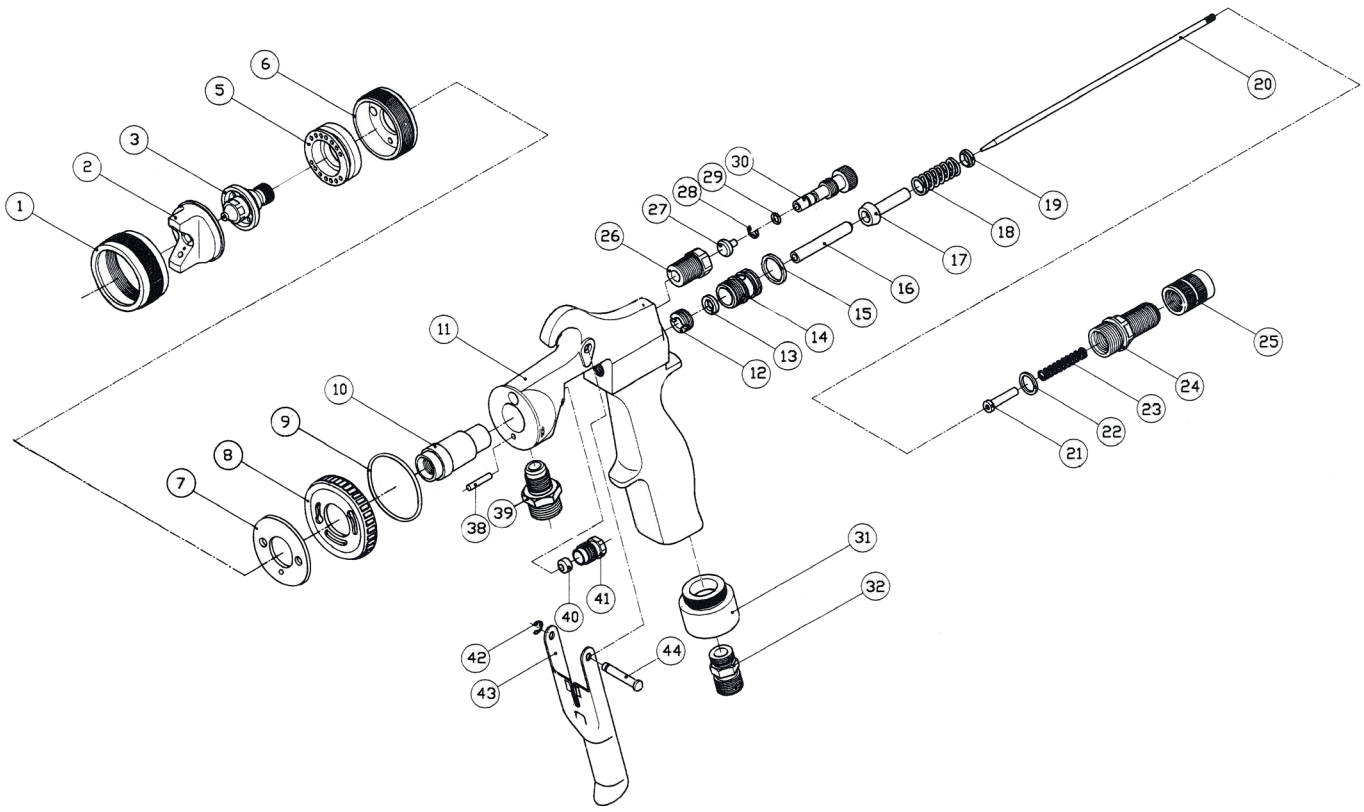

POS.	CODE	DESCRIPTION	PRICE
1/2	5911XX	Air cap and ring	**€ 36,00**
3/4	5912XX	Fluid needle gasket and screw	**€ 26,00**
5	591005	Diffuser	**€ 6,60**
6	591006	Ring	**€ 8,58**
7	591007	Gasket	**€ 1,32**
8	591008	Fan regulation	**€ 18,26**
9	591009	O-ring	**€ 1,10**
10	591010	Sleeve	**€ 13,20**
11	591011	Gun body	**€ 46,20**
12	591012	Screw	**€ 0,88**
13	591013	O-ring	**€ 1,76**
14	591014	Air valve Guide	**€ 7,26**
15	591015	O-ring	**€ 1,76**
16	591016	Air valve rod	**€ 4,18**
17	591017	Air valve	**€ 5,06**
18	591018	Air valve spring	**€ 1,28**
19	591019	Air valve spring support	**€ 1,76**
20/21	5913XX	Complete needle	**€ 17,00**

POS.	CODE	DESCRIPTION
22	591022	O-ring
23	591023	Needle spring
24	591024	Needle guide
25	591025	Needle regulation
26/27/28 29/30	591026	Air regulation
31	591031	Spacer
32	591032	Air inlet
38	591038	Pin
39	591039	Fluid inlet
40	591040	Needle gasket
41	591041	Needle gasket screw
42	591042	Trigger seeger
43	591043	Trigger
44	591044	Trigger pin
1/2/3 20/21	5914XX	Nozzle, needle and air cap kit

R 4300

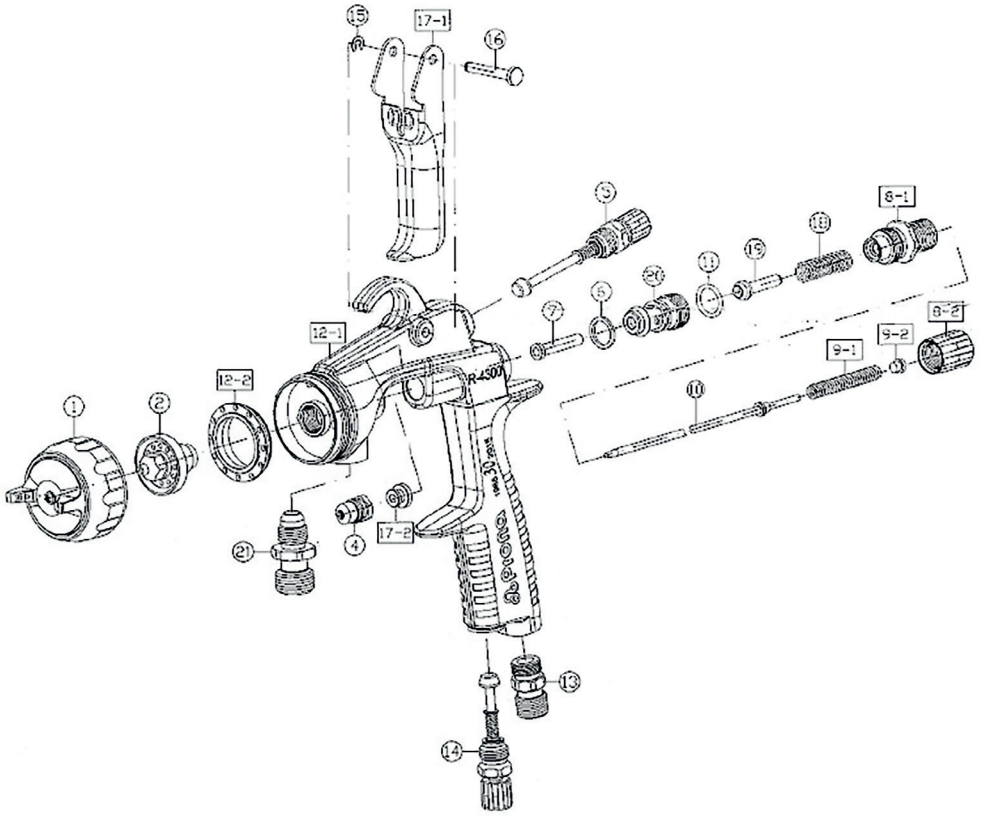

CODE	POS.	DESCRIPTION
2VS4003S13	1	Air hood
VS4003SXX	2/1/10	Nozzle kit
2VS4003S14	4	Patch
2VS4003S15	5	Fan control valve
VS4003S16	6	Stem guide seal
VS4003S17	7	Dipstick guide
VS4003S181	8-1	Air valve guide
VS4003S182	8-2	Dipstick adjustment
VS4003S191	9-1	Dipstick spring
VS4003S192	9-2	Healing
2VS4003S11	11	O-ring
4300R142	12-2	Diffuser
VS4003S103	13	Air nipple
VS4003S104	14	Air tap
VS4003S105	15	Seeger
VS4003S106	16	Pivot
VS4003S171	17-1	Trigger
VS4003S172	17-2	Trigger Guide
2VS4003S18	18	Control valve spring
VS4003S19	19	Air valve
VS4003S120	20	Complete air valve body
VS4003S121	21	Fluid nipple

SGD 71

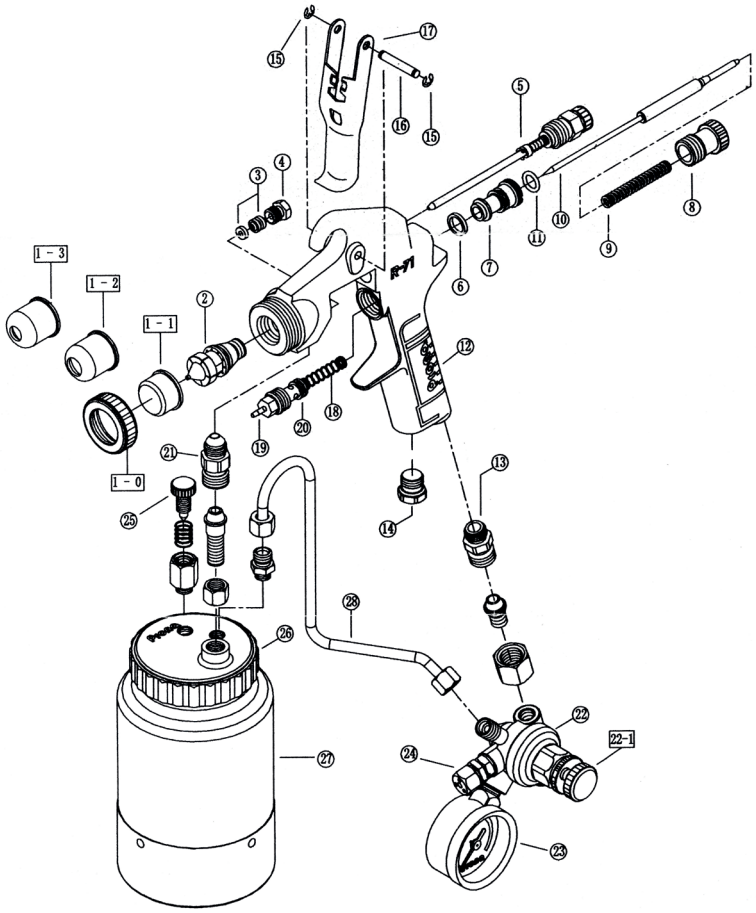

Code	pos.	Description
SGD7110	1 / 2 / 10	Nozzle, needle and air cap kit
P71034	3 / 4	Fluid needle gasket and screw
SGD7105	5	Fan regulation
SGD7106	6	Needle guide gasket
SGD7107	7	Needle guide
SGD7108	8	Needle regulation
SGD7109	9	Needle spring
SGD7111	11	Needle guide O-ring
SGD7113	13	Air inlet
SGD7114	14	Air nut
SGD7115	15	Seeger
SGD7116	16	Trigger pin
SGD7117	17	Trigger
SGD7118	18	Air valve spring
SGD7119	19	Air valve
SGD7120	20	Air valve body complete
SGD7121	21	Fluid inlet
SGD7122	22	Air regulation kit
SGD7123	23	Pressure gauge
SGD7124	24	Safety valve
SGD7125	25	Blow out valve
SGD7126	26	Cup cover
SGD7127	27	Cup body
SGD7128	28	Air hose

MRS F/R

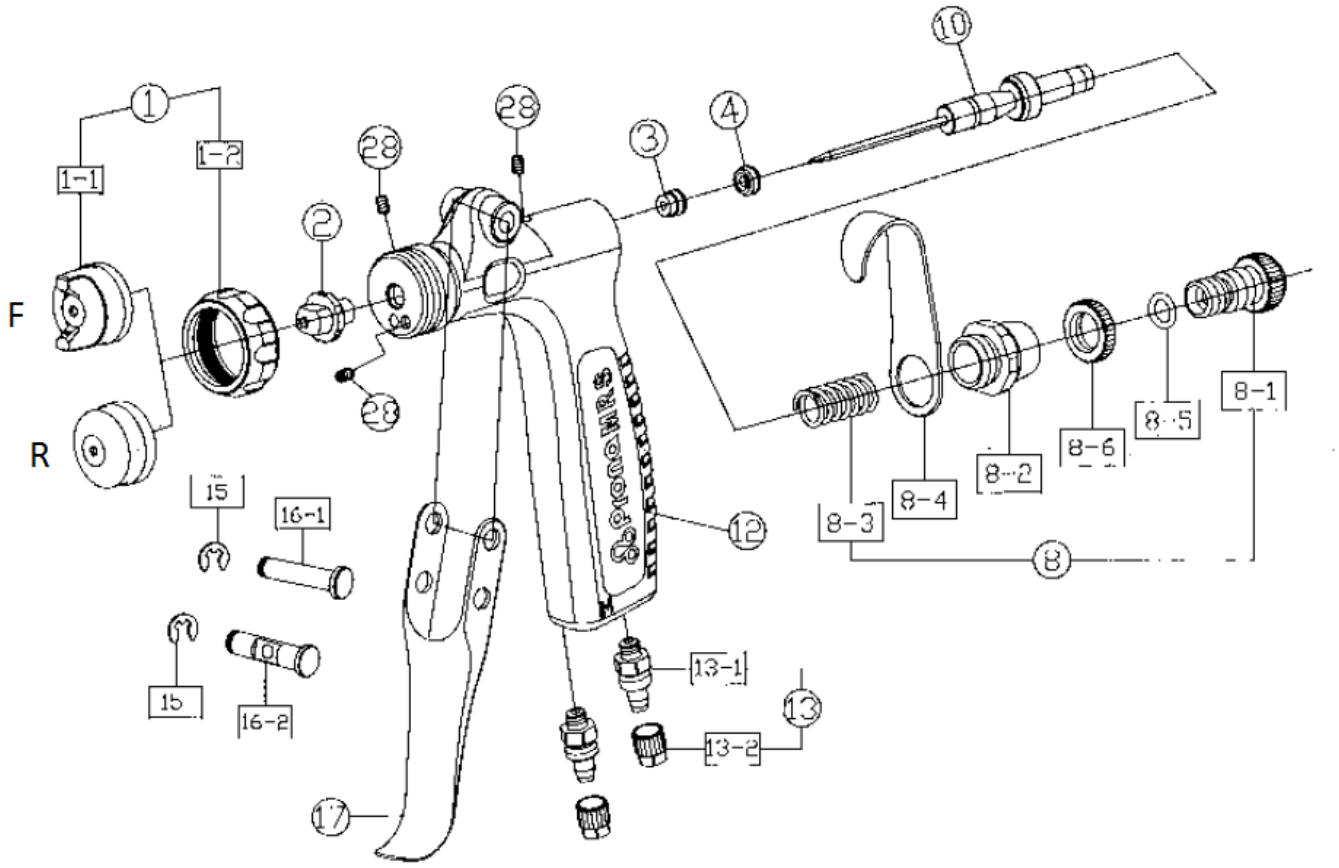

Code	pos.	Description
MRS001F	1	Air nozzle F
MRS001R	1	Air nozzle R
MRSK1XX	2 / 10	Nozzle and needle kit
MRSK2XXF	1 / 2 / 10	Nozzle, needle and air cap kit F
MRSK2XXR	1 / 2 / 10	Nozzle, needle and air cap kit R
MRS034	3 /4	Fluid needle gasket and screw
MRS081	8-1	Air valve guide
MRS082	8-2	Needle regulation
MRS083	8-3	Needle guide
MRS084	8-4	Hook
MRS085	8-5	O-ring
MRS086	8-6	Nut
MRS131	13-1	Air inlet
MRS132	13-2	Air inlet Nut
MRS015	15	Seeger
MRS161	16-1	Trigger pin
MRS162	16-2	Trigger
MRS017	17	Trigger
MRS018	28	Grain

R210 1H

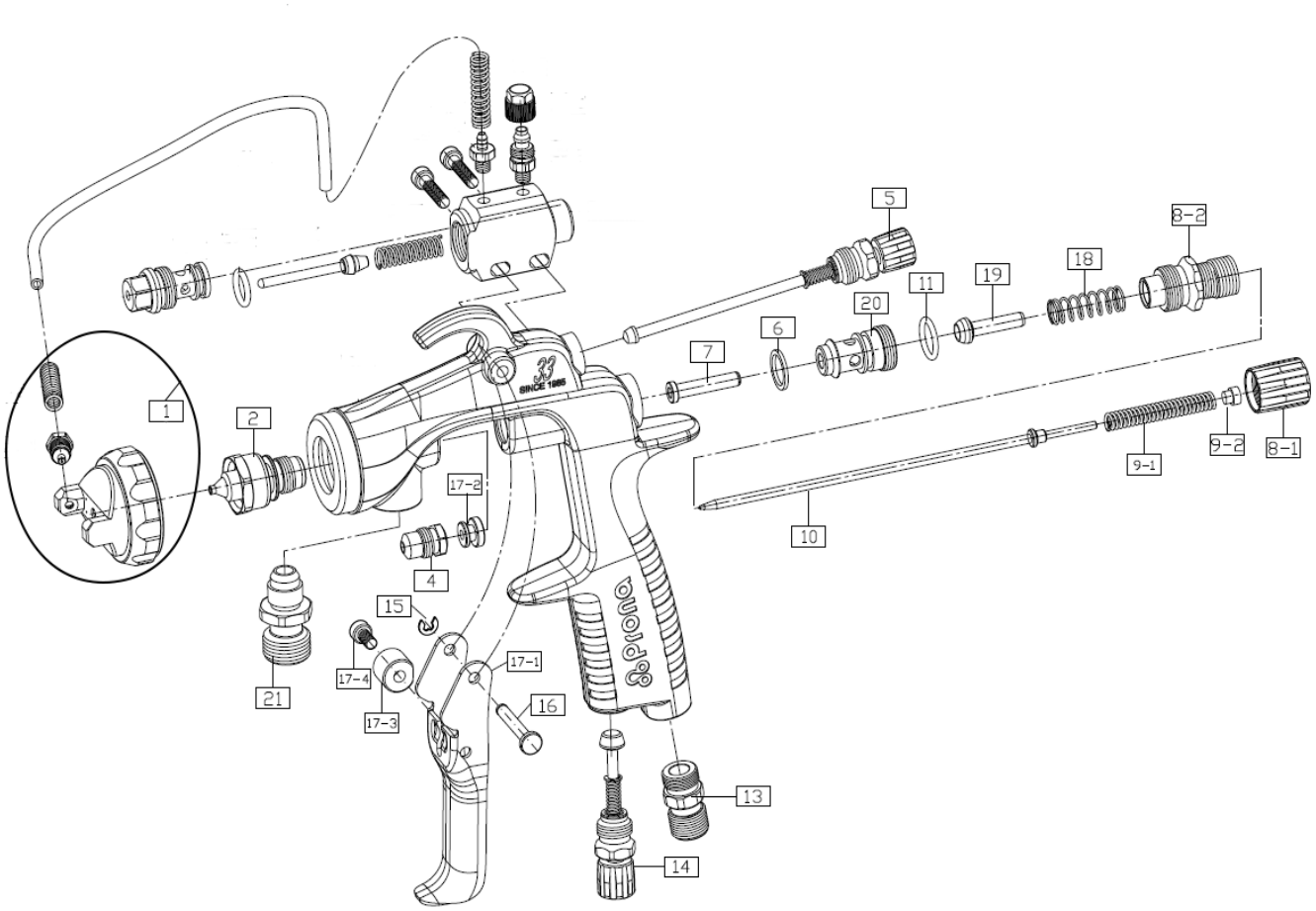

Code	pos.	Description
R1H1XX	1 / 2 / 10	Nozzle, needle and air cap kit R210-1H
21R02XX	2 / 10	Nozzle and needle kit
21HR001	1	Air Cap complete with spring and 0.8mm secondary nozzle
21HR004	4	Fluid needle gasket and screw
21HR005	5	Fan regulation
21HR006	6	Needle guide gasket
21HR007	7	Air valve guide
21HR081	8-1	Needle regulation body
21HR082	8-2	Needle regulation
21HR091	9 -1	Needle spring
21HR092	9-2	Air valve guide gasket
21HR012	12	Dispenser complete kit
21HR013	13	Air inlet
21HR014	14	Air regulation
21HR015	15	Seeger
21HR016	16	Trigger pin
21HR171	17-1	Trigger
21HR172	17-2	Trigger gasket
21HR173	17-3	Trigger lock
21HR174	17-4	Trigger screw
21HR018	18	Air valve spring
21HR019	19	Air valve body
21HR020	20	Complete Air valve body
21HR021	21	Fluid inlet

R210 2H

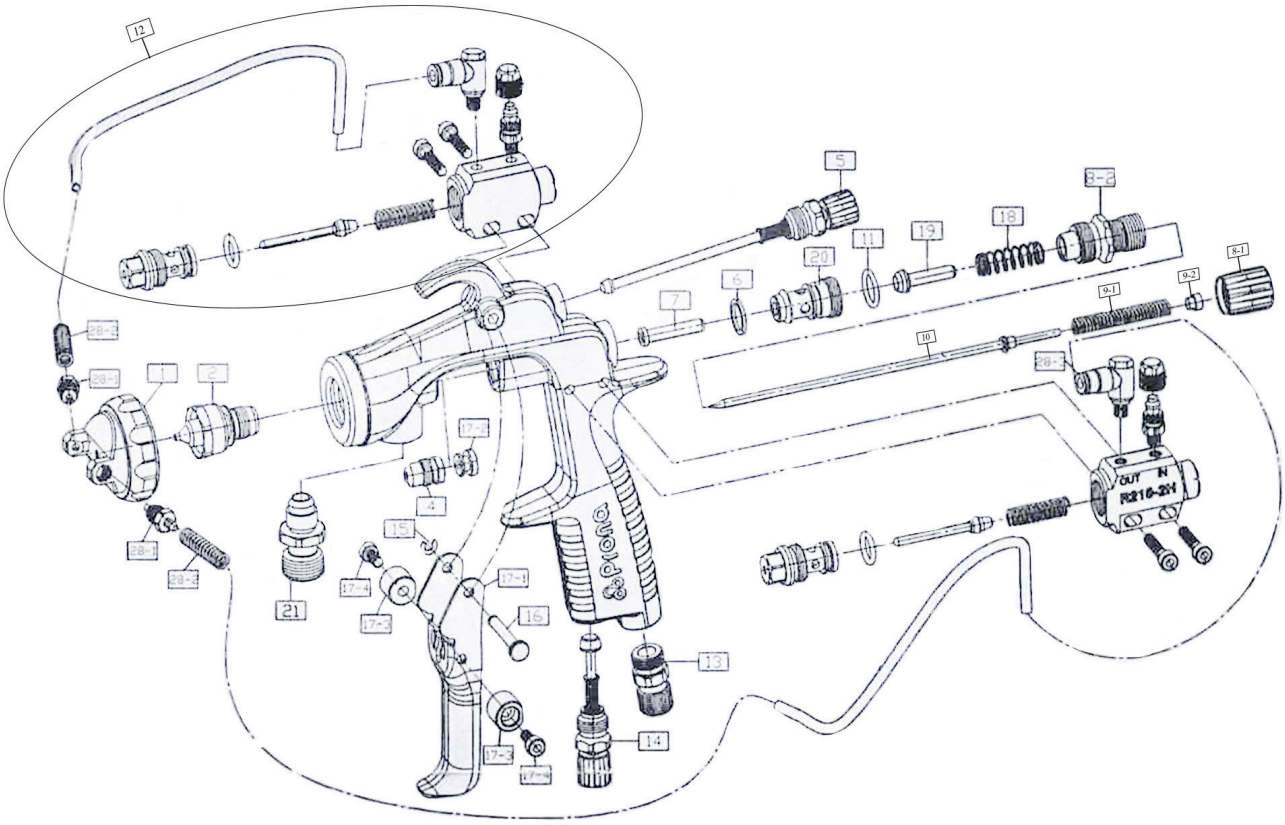

CODE	POS.	DESCRIPTION
VSR2H1XX	1	Complete air hood with two nozzles
VS21R02XX	2/10	Dipstick and nozzle
VS21HR004	4	Patch kit
VS21HR005	5	Fan adjustment
VS21HR006	6	Stem guide seal
VS21HR007	7	Dipstick guide
VS21HR081	8-1	Dipstick adjustment
VS21HR082	8-2	Dipstick regulator body
VS21HR091	9-1	Dipstick spring
VS21HR092	9-2	Stem guide seal
VS21HR012	12	Complete dosing kit
VS21HR013	13	Nipple aria
VS21HR014	14	Dipstick adjustment
VS21HR015	15	Seeger
VS21HR016	16	Trigger pin
VS21HR171	17-1	Trigger
VS21HR172	17-2	Trigger guide
VS21HR173	17-3	Trigger stop
VS21HR174	17-4	Trigger screw
VS21HR018	18	Air valve spring
VS21HR019	19	Air valve
VS21HR020	20	Complete air valve body
VS21HR021	21	Fluid nipple
VS21HR022	28-1	Catalyst nozzle
VS21HR023	28-2	Catalyst spring
VS21HR024	28-3	Coupling

MRS DOUBLE

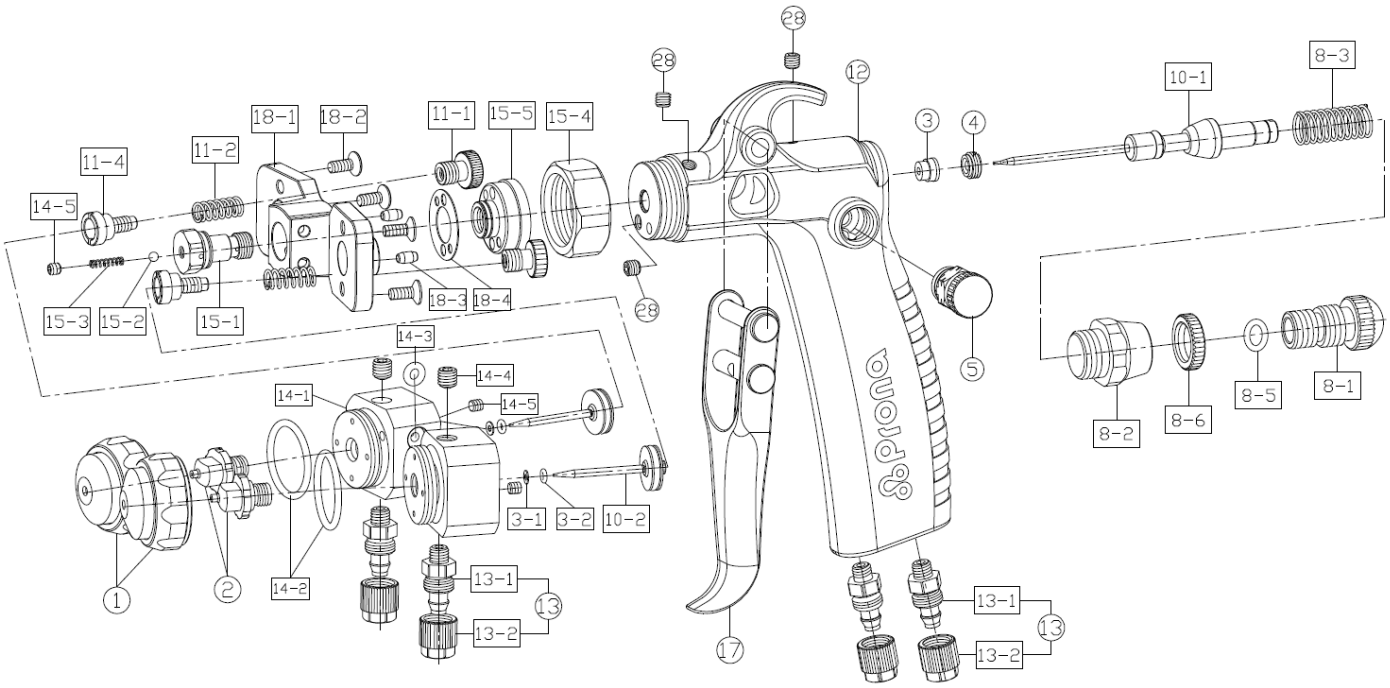

POS.	CODE	DESCRIPTION	PRICE
1	MRD001	Air Cap	**€ 32,00**
2 / 10-2	MRDNXX	Nozzle and needle	**€ 38,00**
1/2/10-2	MRDKXX	Nozzle, needle and air cap kit	**€ 68,00**
3	MRD003	Fluid needle screw	**€ 6,82**
3-1	MRD031	Fluid needle 2 o-ring	**€ 16,30**
3-2	MRD032	SS2 O-ring	**€ 0,88**
4	MRD004	Fluid needle screw	**€ 5,28**
5	MRD005	Fan regulation	**€ 12,98**
8-1	MRD081	Needle regulation	**€ 8,58**
8-2	MRD082	Needle regulation body	**€ 12,98**
8-3	MRD083	Needle guide	**€ 1,76**
8-5	MRD085	Needle regulation gasket	**€ 0,44**
8-6	MRD086	Needle regulation nut	**€ 1,76**
10-1	MRD101	Fluid needle 1	**€ 38,50**
10-2	MRD102	Fluid needle 2	**€ 4,40**
11-1	MRD111	Fluid needle regulation	**€ 12,98**
11-2	MRD112	Needle regulation	**€ 1,76**
11-4	MRD114	Regulator	**€ 17,16**

POS.	CODE	DESCRIPTION
13-1	MRD131	Air connector body
13-2	MRD132	Air connector nut
14-1	MRD141	Head support
14-2	MRD142	Head support gasket
14-3	MRD143	A006 O-ring
14-4	MRD144	Grain M5
14-5	MRD145	Grain M3
15-1	MRD151	Locking screw
15-2	MRD152	Ball 2,5mm
15-3	MRD153	Locking spring
15-4	MRD154	Locking ring
15-5	MRD155	Locking nut
17	MRD017	Trigger set
18-1	MRD181	Axis
18-2	MRD182	Screw
18-3	MRD183	Grain
18-4	MRD184	Gasket
28	MRD028	Grain M4

VSPRO-BI 891

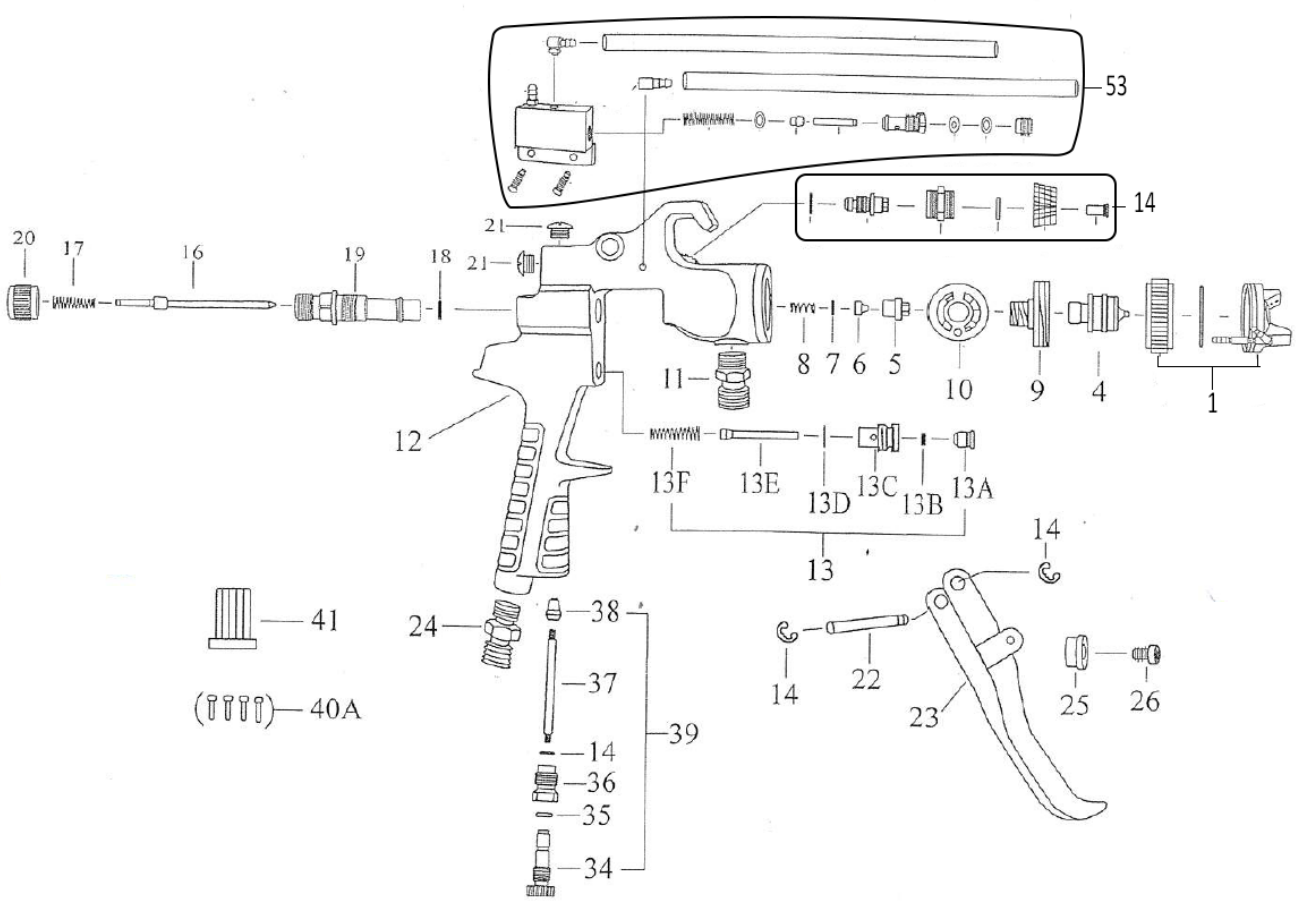

POS.	CODE	DESCRIPTION
1	KNI001	Air Cap with injector
4 / 16	KNINXX	Nozzle and needle
1/4/16	KNIKXX	Nozzle, needle and air cap kit
5	KNI005	Fluid nozzle screw
6	KNI006	PTFE Gasket
7	KNI007	Washer
8	KNI008	Spring
9	KNI009	S.steel inox
10	KNI010	Gasket
11	KNI011	S. steel fluid inlet
13	KNI013	Air valve set
13A	KNI13A	Screw
13B	KNI13B	PTFE Gasket
13C	KNI13C	Air valve body
13D	KNI13D	PVC Gasket
13E	KNI13E	Air valve
13F	KNI13F	Spring

POS.	CODE	DESCRIPTION
14	KNI014	Fluid regulation valve
16	KNI016	Needle
17	KNI017	Needle spring
18	KNI018	O-ring
19	KNI019	Needle guide
20	KNI020	Fluid regulation
21	KNI021	Screw
24	KNI024	Air inlet 1/4”
34	KNI034	Air regulation
35	KNI035	O-ring
36	KNI036	Nut
37	KNI037	Rod
38	KNI038	Gasket
39	KNI039	Air regulation complete
51	KNI051	Fluid hose
53	KNI053	Complete dosing set

SERIE RAC

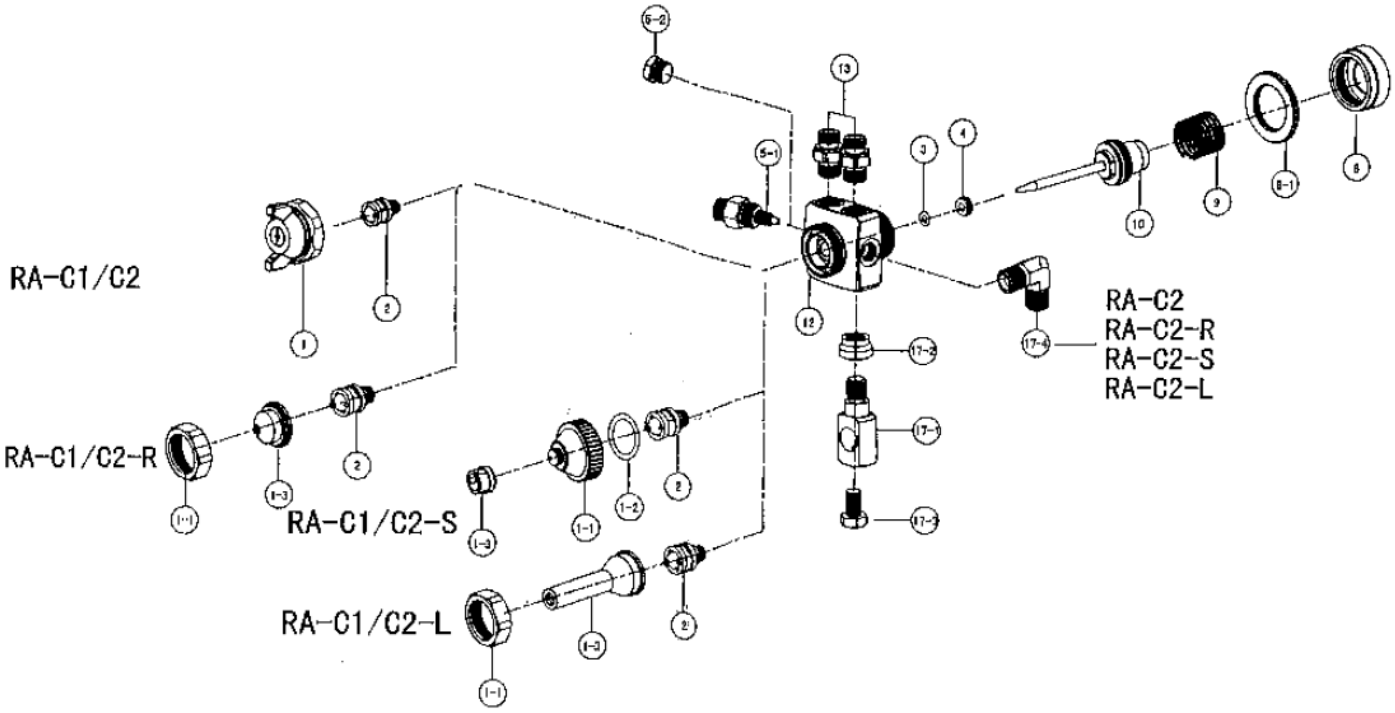

Code	pos.	Description
RAC001N	1	Air Cap standard
RAC001R	1-1 / 1-3	Air Cap R
RAC001S	1-1 / 1-2 / 1-3	Air Cap S
RAC001L13	1-1 / 1-3	Air Cap C2-L13
RAC001L20	1-1 / 1-3	Air Cap C2-L20
RAC002	2	Fluid Nozzle
RAC0034	3/4	Fluid needle gasket and screw
RAC051	5-1	Fan regulation
RAC052	5-2	Regulation cap
RAC008	8	Needle regulation
RAC0081	8-1	Ring
RAC009	9	Needle spring
RAC0010	10	Needle
RAC0910	10-1	NBR piston o-ring
RAC0013	13	Fluid / air inlet
RAC171	17-1	Connector
RAC172	17-2	Connector pin
RAC173	17-3	Connector screw
RAC174	17-4	L fitting (RA-C2)

RAR 1000 - RAR 2000

RAR 1000

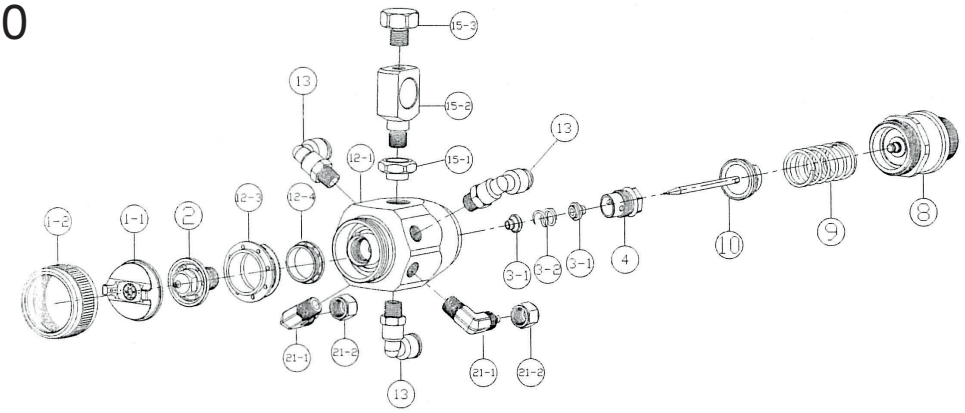

Code	pos.	Description
RAR-20001-2	1-2	Nozzle ring
RAR-20001-1	1-1	Air nozzle
RAR-20002	2	Fluid Nozzle Ø 0,7 / 1,1 / 1,4 / 1,7
RAR-20003-1	3-1	Fluid packing
RAR-20003-2	3-2	Spring needle packing
RAR-20004	4	Screw press / tow
RAR-20008	8	Adjustment rod
RAR-20009	9	Spring piston
RAR-200010	10	Complete dipstick
RAR-200012-1	12-1	Gun body

Code	pos.	Description
RAR-200012-3	12-3	External air diffuser
RAR-200012-4	12-4	Air diffuser internal
RAR-200013	13	Air connection
RAR-200015-1	15-1	Ring
RAR-200015-2	15-2	Screw anchor
RAR-200015-3	15-3	Locking nut
RAR-2000KIT07		Nozzle, needle and air cap kit 0,7
RAR-2000KIT11		Nozzle, needle and air cap kit 1,1
RAR-2000KIT14		Nozzle, needle and air cap kit 1,4
RAR-2000KIT17		Nozzle, needle and air cap kit 1,7

RAR 2000

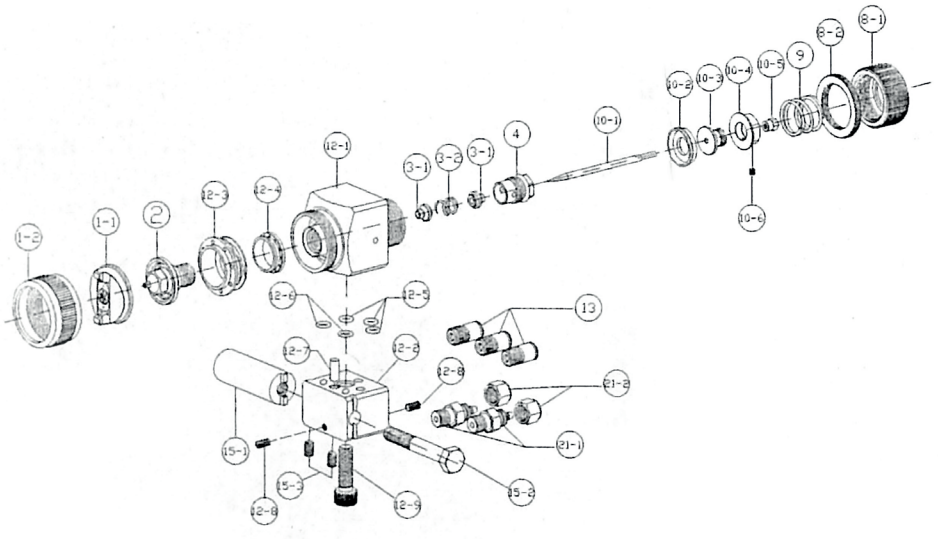

Code	pos.	Description
RAR-10001-2	1-2	Nozzle ring
RAR-10001-1	1-1	Air nozzle
RAR-10002	2	Fluid nozzle Ø 0,7/1,1/1,4/1,7
RAR-10003-1	3-1	Fluid packing
RAR-10003-2	3-2	Spring needle packing
RAR-10004	4	Screw press/ tow
RAR-10008	8	Adjustment rod
RAR-10008-2	8-2	Spring adjusting rod
RAR-10009	9	Piston Seal
RAR-100010-1	10-1	Complete needle
RAR-100010-2	10-2	Piston seal
RAR-100010-3	10-3	Piston
RAR-100010-4	10-4	Piston washer
RAR-100010-5	10-5	Closing nut
RAR-100010-6	10-6	Piston nut

Code	pos.	Description
RAR-100012-1	12-1	Gun body
RAR-100012-2	12-2	Base
RAR-100012-3	12-3	External air diffuser
RAR-100012-4	12-4	Air diffuser internal
RAR-100012-5	12-5	Air sealing OR
RAR-100012-6	12-6	Sealing paint OR
RAR-100012-7	12-7	Pisotn
RAR-100012-8	12-8	Set screw
RAR-100012-9	12-9	Studs base
RAR-100013	13	Air connection
RAR-1000KIT07	-	Nozzle, needle and air cap kit 0,7
RAR-1000KIT11	-	Nozzle, needle and air cap kit 1,1
RAR-1000KIT14	-	Nozzle, needle and air cap kit 1,4
RAR-1000KIT17	-	Nozzle, needle and air cap kit 1,7

RA 210

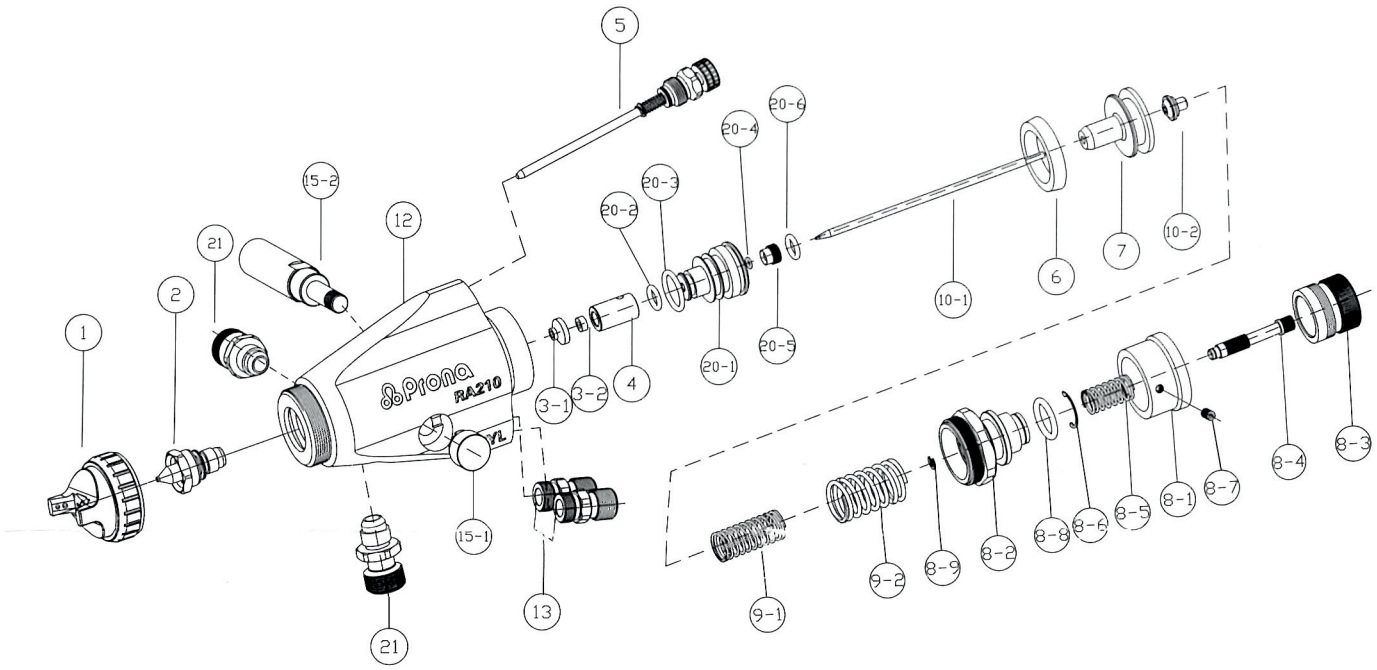

Code	pos.	Description
RA210P1	1	Air Cap set
RA210P2	2	Fluid nozzle
RA210P3-1	3-1	Fluid needle packing
RA210P3-2	3-2	U shape packing
RA210P4	4	Fluid needle packing holder
RA210P5	5	Pattern adjusting set
RA210P6	6	Fluid needle guide packing
RA210P7	7	Fluid needle guide
RA210P8-1	8-1	Fluid adjustable scale seat
RA210P8-2	8-2	Fluid adjustable knob guide
RA210P8-3	8-3	Fluid adjustable knob
RA210P8-4	8-4	Fluid adjustable mandrel
RA210P8-5	8-5	Fluid adjustable knob spring
RA210P8-6	8-6	Snap ring
RA210P8-7	8-7	Set screw
RA210P8-8	8-8	OR
RA210P8-9	8-9	Gasket
RA210P9-1	9-1	Spring
RA210P9-2	9-2	Spring

Code	pos.	Description
RA210P10-1	10-1/2	Fluid needle
RA210P12	12	Gun Body
RA210P13	13	Air connector
RA210P15-1	15-1	Gun body support screw
RA210P15-2	15-2	Gun body support
RA210P20-1	20-1	Air valve seat
RA210P20-2	20-2	OR
RA210P20-3	20-3	OR
RA210P20-4	20-4	OR
RA210P20-5	20-5	Packing holder
RA210P20-6	20-6	OR
RA210P21	21	Fluid connector
RA210PKIT12	-	Nozzle, needle and air cap kit 1,2
RA210PKIT15	-	Nozzle, needle and air cap kit 1,5
RA210PKIT18	-	Nozzle, needle and air cap kit 1,8
RA210PKIT20	-	Nozzle, needle and air cap kit 2,0
RA210PKIT25	-	Nozzle, needle and air cap kit 2,5

RA230XXT	1/2/10	Nozzle, needle and air cap kit RA 210 Ø mm. 0,8 / 1,0
RA210XXT		VGS2BP Air Nozzle
RA211XXT		VLSV2B Air Nozzle
RA212XXT		VKS2B Air Nozzle
RA213XXT		VRS2B Air Nozzle
RA214XXT		VWS2B Air Cap

RA 100

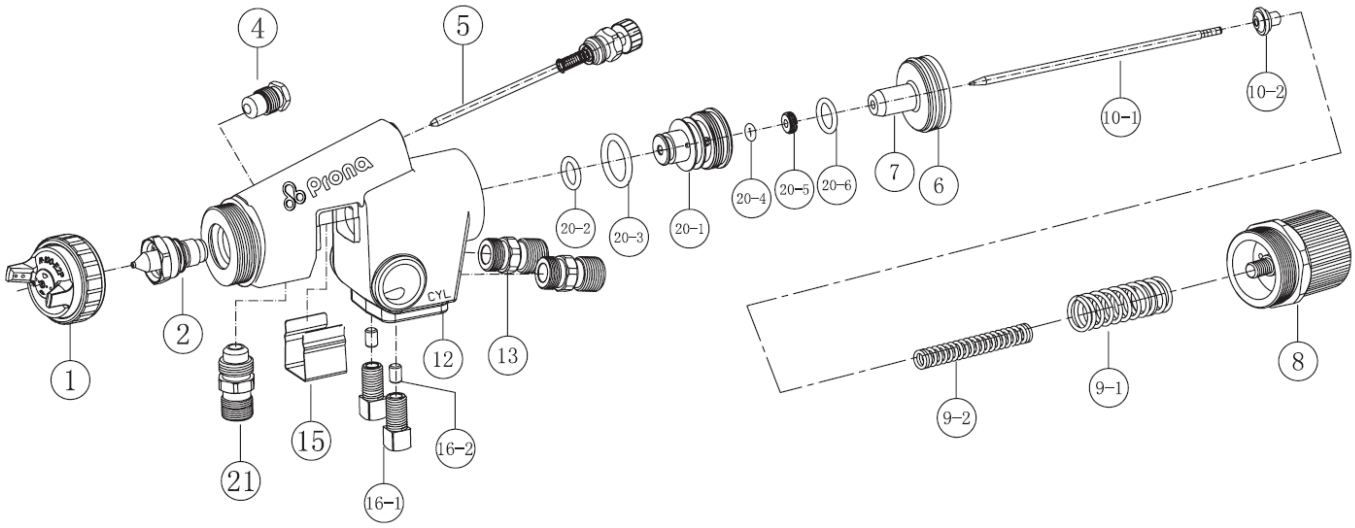

Code	pos.	Description
RA120XX	2 / 10	Fluid Nozzle and needle
RA10134	4	Needle gasket and screw
RA10105	5	Fan regulation
RA10106	6	Piston Gasket
RA10107	7	Piston
RA10108	8	Needle regulation
RA10109	9-1	Piston spring
RA10209	9-2	Needle spring
RA10113	13	Air inlet
RA20115	15	Needle cover
RA20116	16	Support fixing screw
RA10120	20	Air valve
RA10320	20-1	Air valve body
RA10420	20-2	Air valve o ring
RA10520	20-3	Air valve o ring
RA10220	20-4	Air valve gasket
RA15420	20-5	Locking screw O-ring
RA16520	20-6	O-ring
RA10121	21	Fluid inlet
RA130XX	1 / 2 / 10	Nozzle kit RA 100
RA110XX		VES2P Air nozzle
RA111XX		VHS2B Air nozzle
RA112XX		VKS1B Air nozzle
RA113XX		VNS2B Air nozzle

RA 200

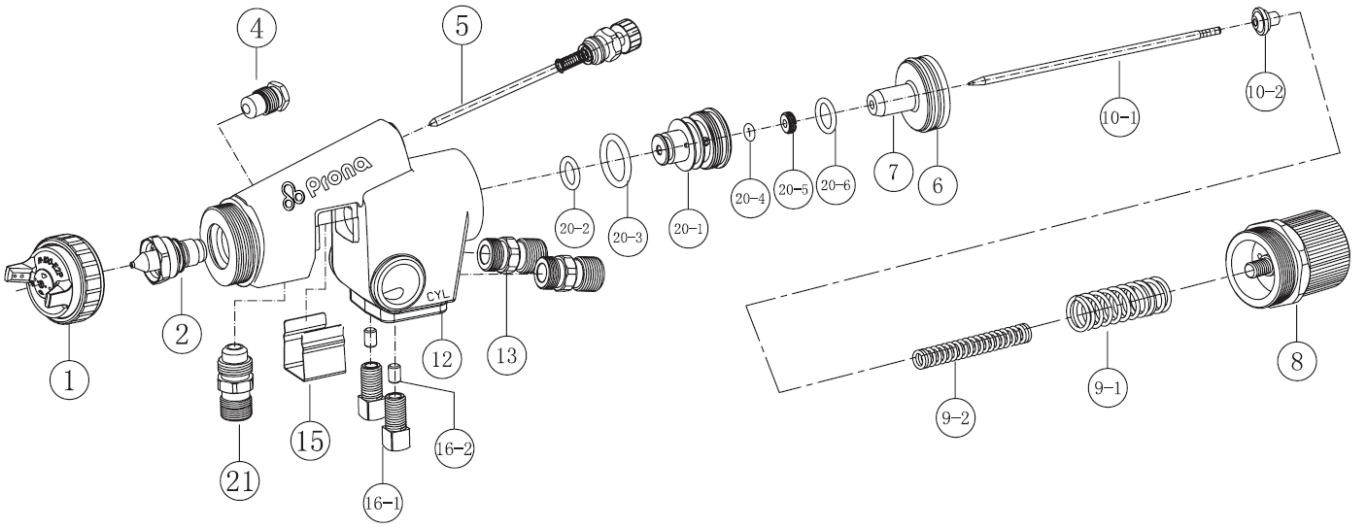

Code	pos.	Description
RA220XXM	2 / 10	Nozzle and needle kit Ø mm. 0,8 / 1,0 multihole
RA220XX	2 / 10	Nozzle and needle kit Ø mm. 0,8 / 1,0 / 1,2 / 1,5 / 1,8 / 2,0 / 2,5
RA20134	3 / 4	Fluid needle gasket and screw
RA20105	5	Fan regulation
RA20106	6	Piston gasket
RA20107	7	Piston
RA20108	8	Needle regulation
RA20109	9-1	Piston Spring
RA20209	9-2	Needle spring
RA20113	13	Air inlet
RA20115	15	Needle cover
RA20116	16-1	Support fixing screw
RA20126	16-2	Fixing screw insert
RA20120	20	Air valve
RA20320	20-1	Air valve body
RA20420	20-2	Air valve o-ring
RA20520	20-3	Air valve o-ring
RA20220	20-4	Air valve gasket
RA25420	20-5	Locking screw O-ring
RA26520	20-6	O-ring
RA20121	21	Fluid inlet
RA230XX	1/2/10	Nozzle kit RA 200 Ø mm. 0,8 / 1,0
RA230XX	1/2/10	Nozzle kit RA 200 Ø mm. 1,2 / 1,5 / 1,8 / 2,0 / 2,5
RA230XXZ	1/2/10	Nozzle kit RA200-Z Treated Ø mm 2,0 / 2,5
RA210XX		VGS2BP Air nozzle
RA211XX		VLSVB2 Air nozzle
RA212XX		VKS2B Air nozzle
RA213XX		VRS2B Air nozzle
RA214XX		VWS2B Air nozzle

RA 4300

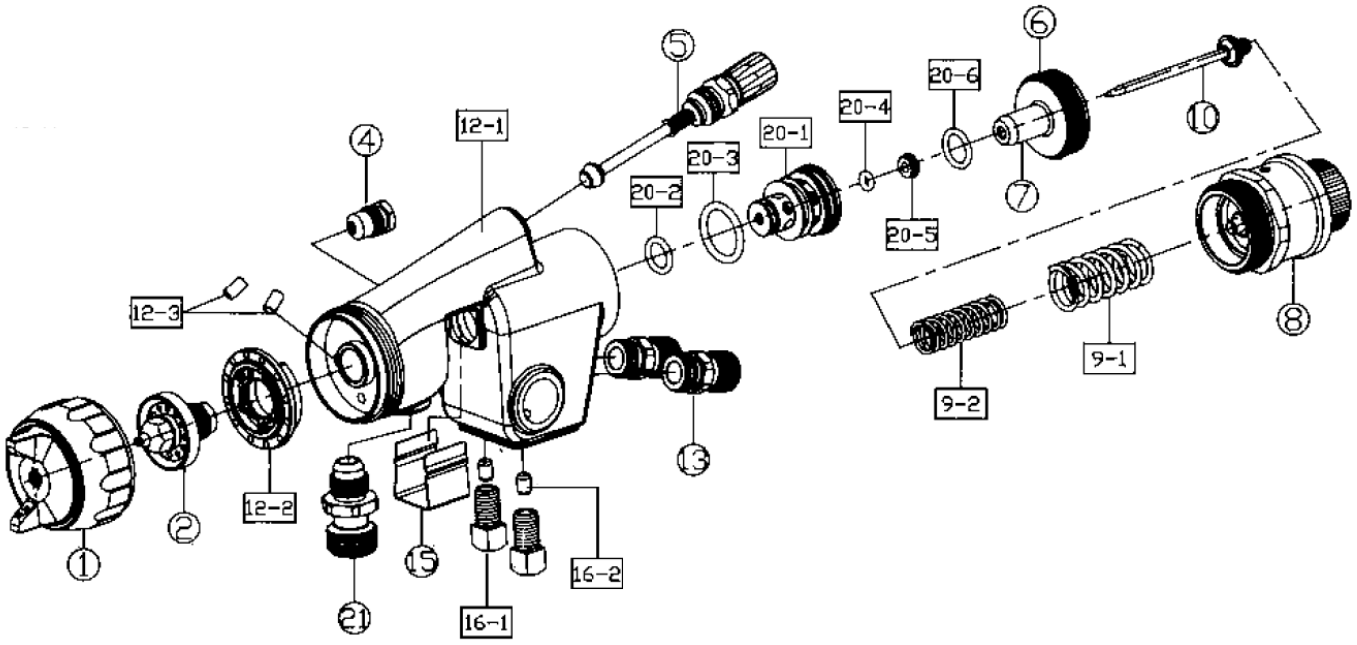

Code	pos.	Description
RA43001R	1	Air Cap RP
RA43001H	1	Air Cap HVLP
RA43NXX	2 / 10	Fluid Nozzle and needle
RA43KXX	1 / 2 / 10	Nozzle, needle and air cap kit
RA43004	4	Needle gasket and screw
RA43005	5	Fan regulation
RA43006	6	Needle guide gasket
RA43007	7	Needle guide
RA43008	8	Fluid Regulation
RA43091	9-1	Needle spring 1
RA43092	9-2	Needle spring 2
RA43122	12-2	Diffuser
RA43123	12-3	Copper Grain
RA43013	13	Air inlet
RA43015	15	Needle cover
RA43161	16-1	Screw
RA43162	16-2	Screw support
RA43201	20-1	Air valve seat
RA43202	20-2	O-ring P9
RA43203	20-3	O-ring P16
RA43204	20-4	O-ring P3
RA43205	20-5	Gasket support
RA43206	20-6	O-ring P10
RA43021	21	Fluid inlet

RA 4000

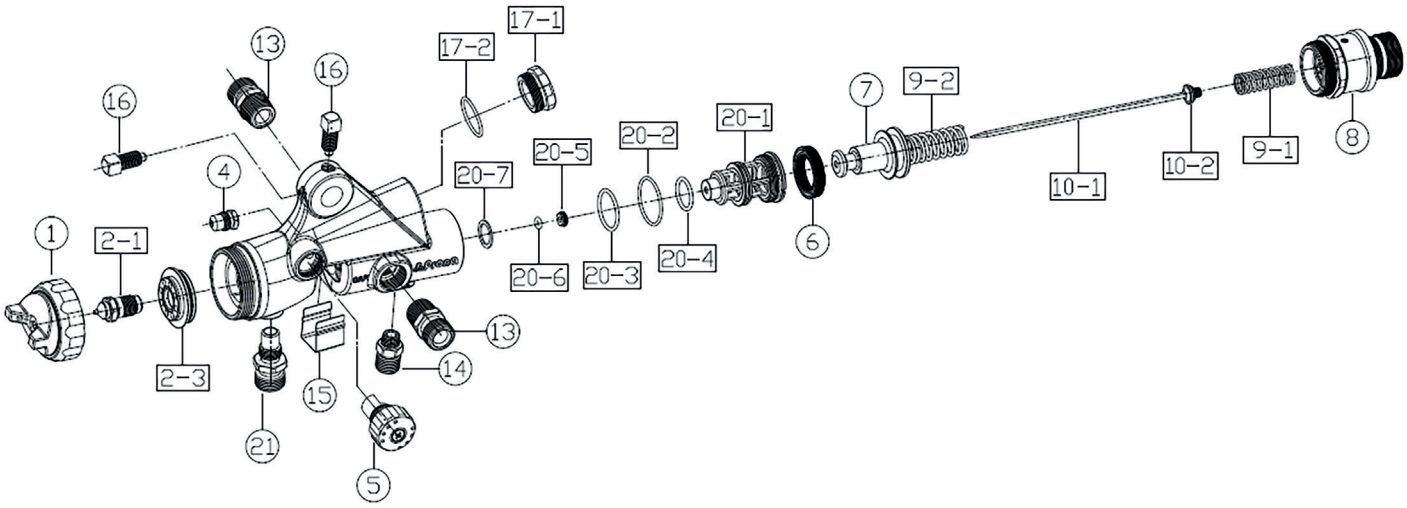

Code	pos.	Description
400R001	1	Air Cap
400RNXX	2 / 10	Nozzle and needle
400RKXX	1 / 2 / 10	Nozzle, needle and air cap kit
400R023	2-3	Diffuser
400R004	4	Fluid Nozzle
400R005	5	Fan regulation
400R006	6	Air valve guide
400R007	7	Air valve guide
400R008	8	Fluid regulator
400R091	9-1	Needle guide 1
400R092	9-2	Needle guide 2
400R013	13	Air inlet A
400R014	14	Air inlet B
400R015	15	Cover
400R016	16	Screw
400R171	17-1	Cap Gasket
400R172	17-2	Cap
400R201	20-1	Air valve seat
400R202	20-2	O-ring 23.6
400R203	20-3	O-ring 20
400R204	20-4	O-ring 14.8
400R205	20-5	Gaskets support
400R206	20-6	O-ring P10
400R207	20-7	Air valve gasket
400R021	21	Fluid connector

RAL 100 - RAL 200

RAL 100

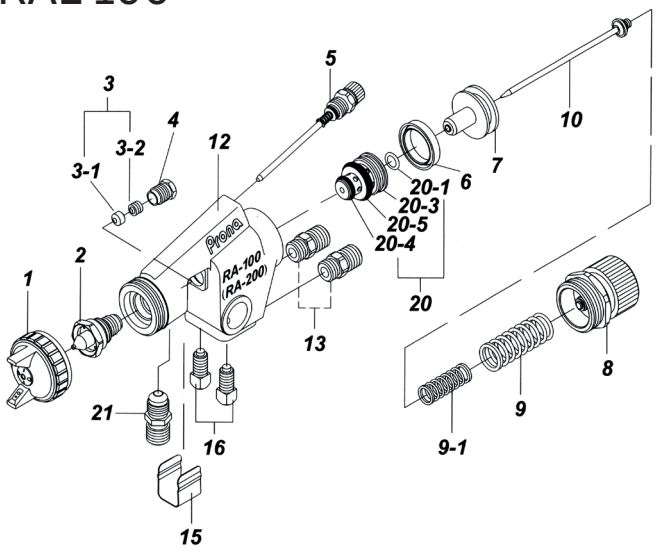

RAL 200

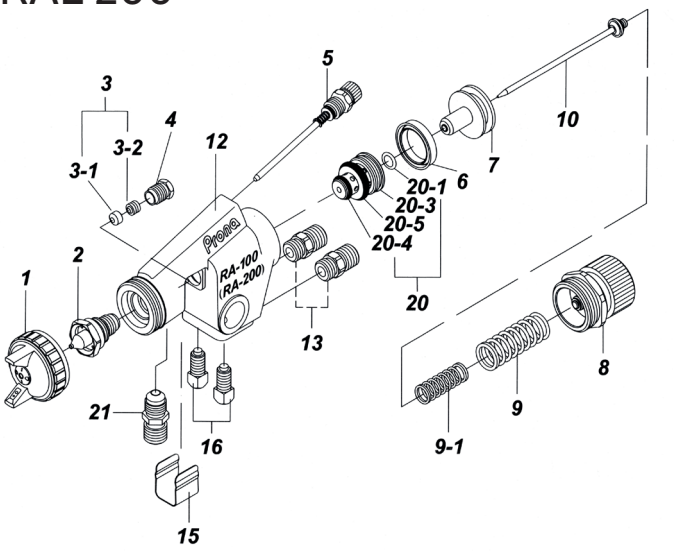

Code	pos.	Description
RAL12XX	1	Air cap
RAL13XX	2 / 10	Fluid Nozzle and needle
RAL1134	3 / 4	Needle gasket and screw
RAL1105	5	Fan regulation
RAL1106	6	Piston gasket
RAL1107	7	Piston
RAL1108	8	Needle regulation
RAL1109	9	Piston spring
RAL1209	9-1	Needle spring
RAL1113	13	Air inlet
RAL1115	15	Needle cover
RAL1116	16	Support screw
RAL1120	20	Air valve
RAL1220	20-1	Seal Air valve
RAL1320	20-3	Air valve body
RAL1420	20-4	Air valve O ring
RAL1520	20-5	Air valve O ring
RAL1121	21	Fluid inlet
RAL14XX	1/2/10	Nozzle, needle and air cap kit RAL 100

Code	pos.	Description
RAL23XX	2 / 10	Fluid Nozzle and needle
RAL2134	3 / 4	Needle gasket and screw
RAL2105	5	Fan regulation
RAL2106	6	Piston gasket
RAL2107	7	Piston
RAL2108	8	Needle regulation
RAL2109	9	Piston spring
RAL2209	9-1	Needle guide
RAL2113	13	Air inlet
RA20115	15	Needle cover
RA20116	16	Support screw
RAL2120	20	Air valve
RAL2220	20-1	Air valve Seal
RAL2320	20-3	Air valve Body
RAL2420	20-4	Air valve O-ring
RAL2520	20-5	Air valve O ring
RAL2121	21	Fluid inlet
RAL27XX	21	Air cap RAL 200
RAL24XX	1/2/10	Nozzle, needle and air cap kit RAL 200

RAR 100 - RAR 200

RAR 100

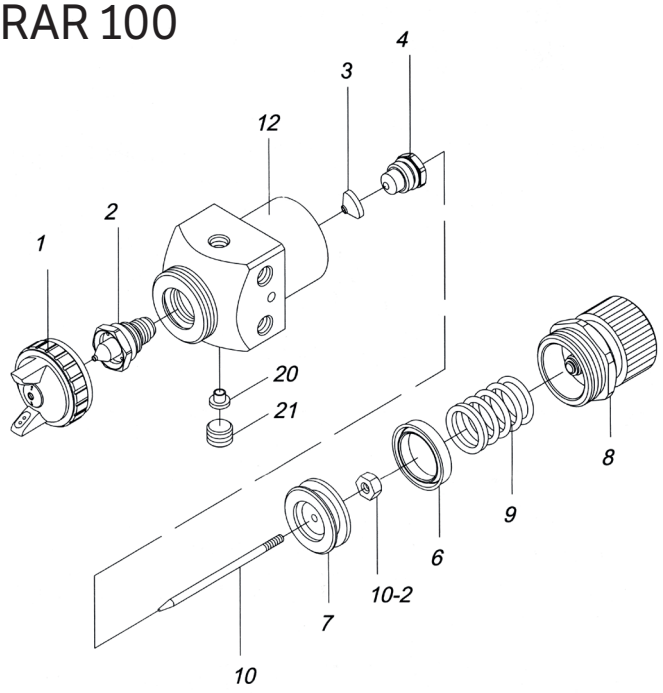

RAR 200

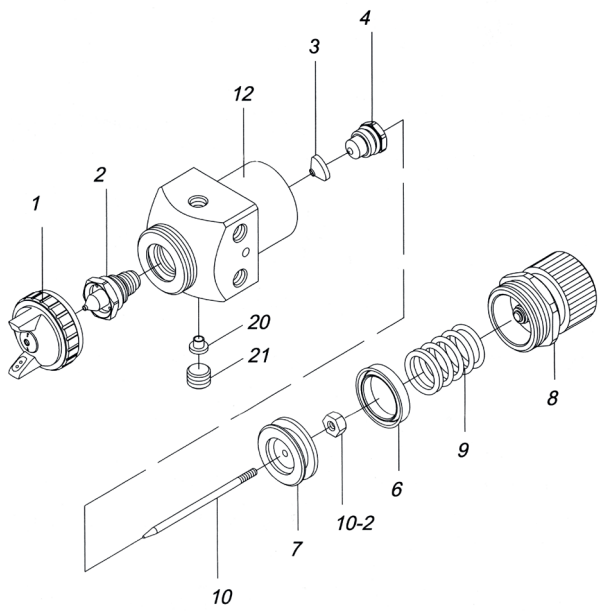

Code	pos.	Description RAR 100
RAR12XX	1	Air nozzle
RAR13XX	2 / 10	Fluid nozzle and needle
RAR1103	3	Needle gasket screw
RAR1104	4	Needle gasket
RAR1106	6	Piston gasket
RAR1107	7	Piston
RAR1108	8	Fan regulation
RAR1109	9	Piston spring
RAR1110	10-2	Needle Nut
RAR1120	20	Cap
RAR1121	21	Grain
RAR14XX	1 / 2 / 10	Nozzle, needle and air cap kit RAR 100

Code	pos.	Description RAR 200
RAR23XX	1	Air nozzle
RAR22XX	2 / 10	Fluid nozzle and needle
RAR2103	3	Needle gasket screw
RAR2104	4	Needle gasket
RAR2106	6	Piston gasket
RAR2107	7	Piston
RAR2108	8	Fan regulation
RAR2109	9	Piston spring
RAR2110	10-2	Needle Nut
RAR2120	20	Cap
RAR2121	21	Grain
RAR02XX		Nozzle, needle and air cap kit RAR 200

RAR 1001 - RAR 200SI

RAR 1001

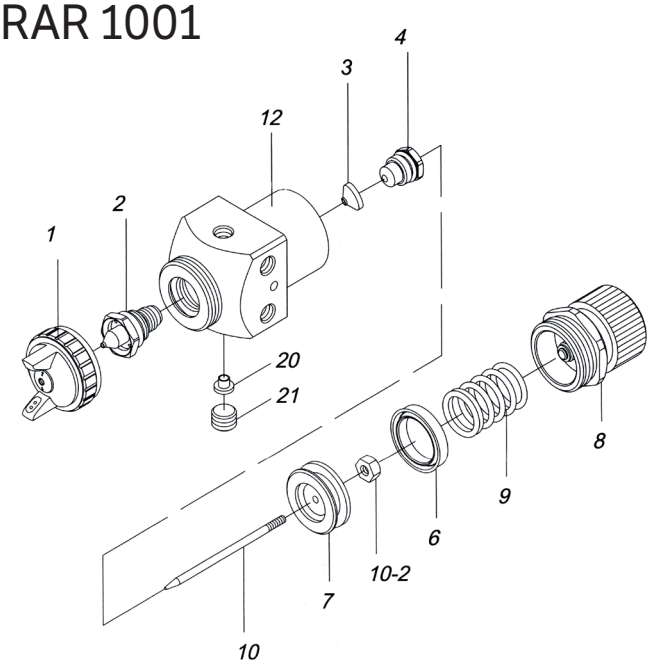

RAR 200SI

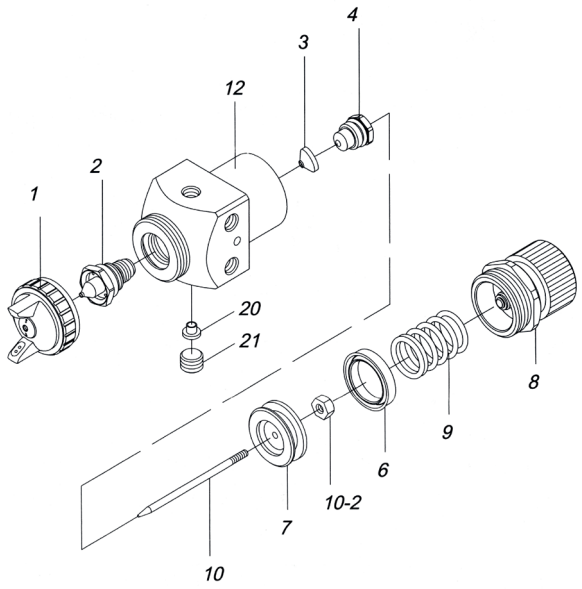

Code	pos.	Description RAR 1001
RAR10012XX	1	Air cap
RAR10013XX	2 / 10	Fluid Nozzle and needle
RAR100103	3	Needle gasket screw
RAR100104	4	Needle gasket
RAR100106	6	Piston gasket
RAR100107	7	Piston
RAR100108R	8	Fan regulation
RAR100109	9	Piston spring
RAR100110	10-2	Needle nut
RAR100120	20	Cap
RAR100121	21	Grain
RAR10014XX	1 / 2 / 10	Nozzle, needle and air cap kit RAR 1001

Code	pos.	Description RAR 200SI
RAR200SI3XX	1	Air cap
RAR200SI2XX	2 / 10	Fluid Nozzle and needle
RAR200SI03	3	Needle gasket screw
RAR200SI04	4	Needle gasket
RAR200SI06	6	Piston gasket
RAR200SI07	7	Piston
RAR200SI08R	8	Fan regulation
RAR200SI09	9	Piston spring
RAR200SI10	10-2	Needle nut
RAR200SI120	20	Cap
RAR200SI21	21	Grain
RAR200SIXX		Nozzle, needle and air cap kit RAR 200SI

RA 60 - RA 80

RA 60

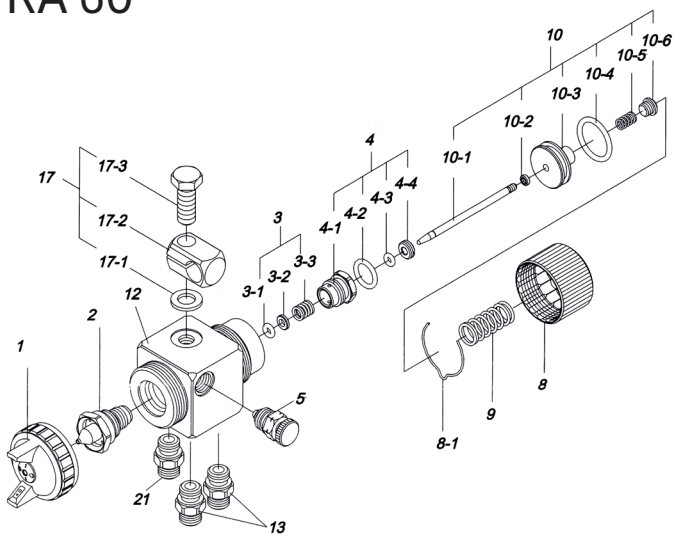

RA 80

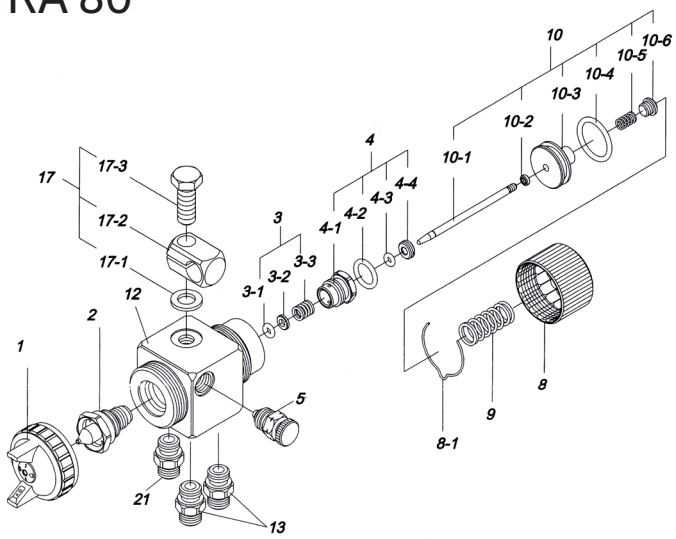

Code	pos.	Description RA 60
RA610XX	1	Air nozzle RA 60
RA620XX	2 / 10	Fluid Nozzle and needle RA 60
RA60103	3	Needle gasket screw
RA60104	4	Needle gasket
RA60105	5	Fan regulation
RA60108	8	Regulation Cover
RA60208	8-1	Clip adjustment
RA60109	9	Needle spring
RA60113	13	Air inlet
RA60117	17	Gun support kit
RA60121	21	Fluid inlet
RA630XX	1 / 2 / 10	Nozzle, needle and air cap kit RA 60
RA610XXV		VES2P Air nozzle
RA611XX		VHS2B Air nozzle
RA612XX		VKS1B Air nozzle
RA613XX		VNS2B Air nozzle

Code	pos.	Description RA 80
RA801XX	1	Air nozzle RA 80
RA802XX	2 / 10	Fluid Nozzle and needle RA 80
RA80103	3	Needle gasket crew
RA80104	4	Needle gasket
RA80105	5	Fan regulation
RA80108	8	Regulation cover
RA80208	8-1	Clip adjustment
RA80109	9	Needle spring
RA80113	13	Air inlet
RA80117	17	Gun support kit
RA80121	21	Fluid inlet
RA810XX	1 / 2 / 10	Nozzle, needle and air cap kit RA 80
RA801XXV		VGS2BP Air nozzle
RA803XX		VLSVB2 Air nozzle
RA804XX		VKS2B Air nozzle
RA805XX		VRS2B Air nozzle
RA806XX		VWS2B Air nozzle

P 2003 - OUT OF PRODUCTION

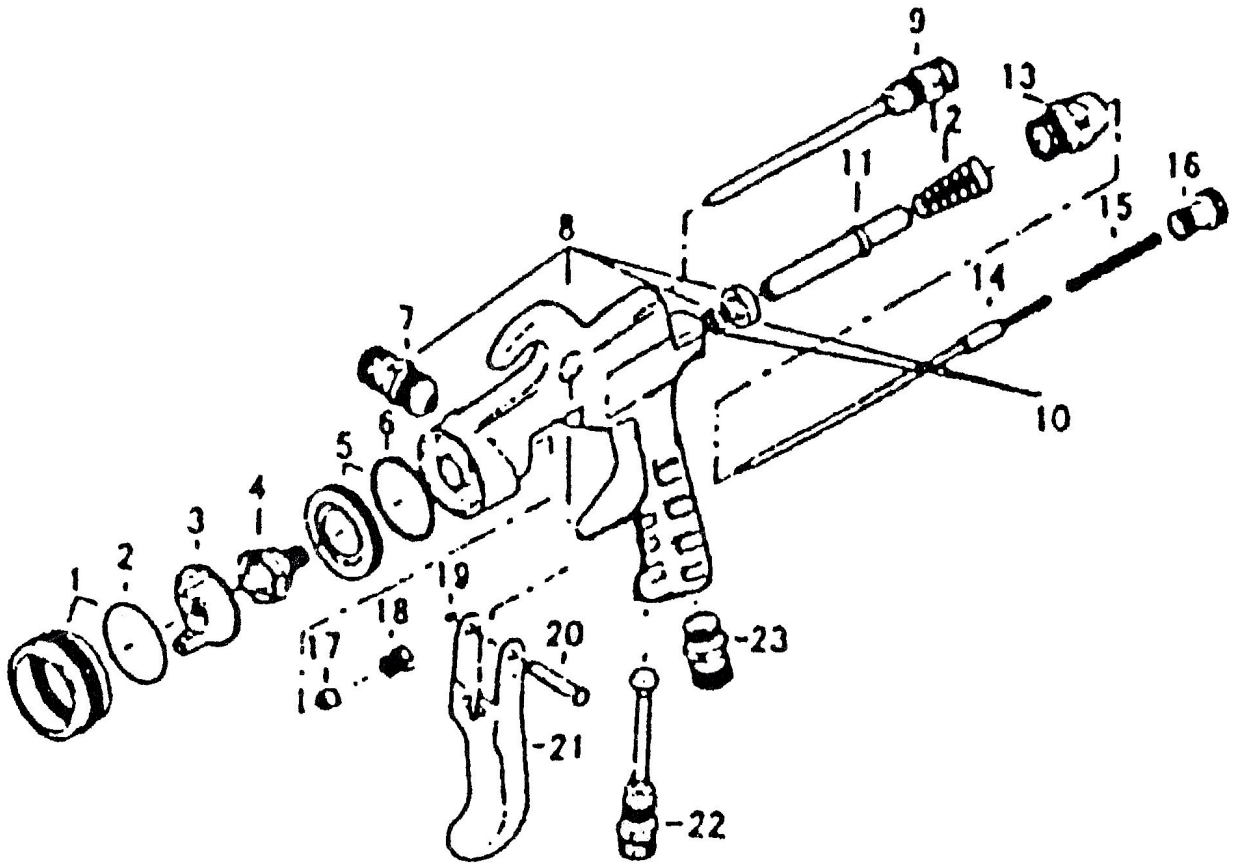

Code	pos.	Description
203P001	1	Air cap ring
203P002	2	Gasket
203P1XX	3	Air nozzle
203P2XX	4	Fluid nozzle
203P005	5	Ring nut
203P006	6	Gasket
203P007	7	Fluid inlet
203P008	8	Gun body
203P009	9	Fan regulation
203P010	10	Valve seat
203P011	11	Air valve
203P012	12	Air valve spring
203P013	13	Air valve connection
203P3XX	14	Needle
203P015	15	Needle spring
203P016	16	Adjusting rod
203P017	17	Needle packing
203P018	18	Screw needle packing
203P019	19	Seeger Trigger
203P020	20	Trigger stud
203P021	21	Trigger
203P022	22	Air regulation
203P023	23	Air inlet
203P4XX	1/2/3/4/14	Nozzle, needle and air cap kit 2003 P

R2 R / F

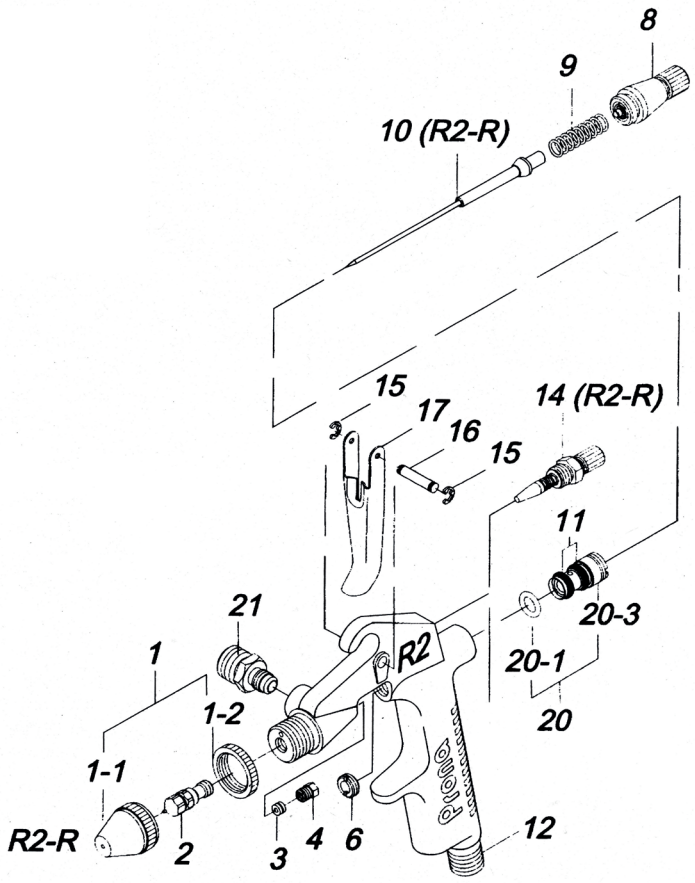

Code	pos.	Description
R2F1XX	1 / 2 / 10	Nozzle, needle and air cap kit R2 F
R2R1XX	1 / 2 / 10	Nozzle, needle and air cap kit R2 R
R20003	3	Needle gasket screw
R20004	4	Needle gasket
R20005	5	Fan regulation R2 F
R20006	6	Air valve needle gasket screw
R20008	8	Needle regulation
R20009	9	Needle spring
R20011	11	Air valve O ring
R20014	14	Air regulation
R20015	15	Seeger
R20016	16	Trigger pin
R20017	17	Trigger
R20020	20	Air valve complete body
R20021	21	Fluid inlet
PRC5114		Side cup 200 cc. FG. 1/4”

VSA 81

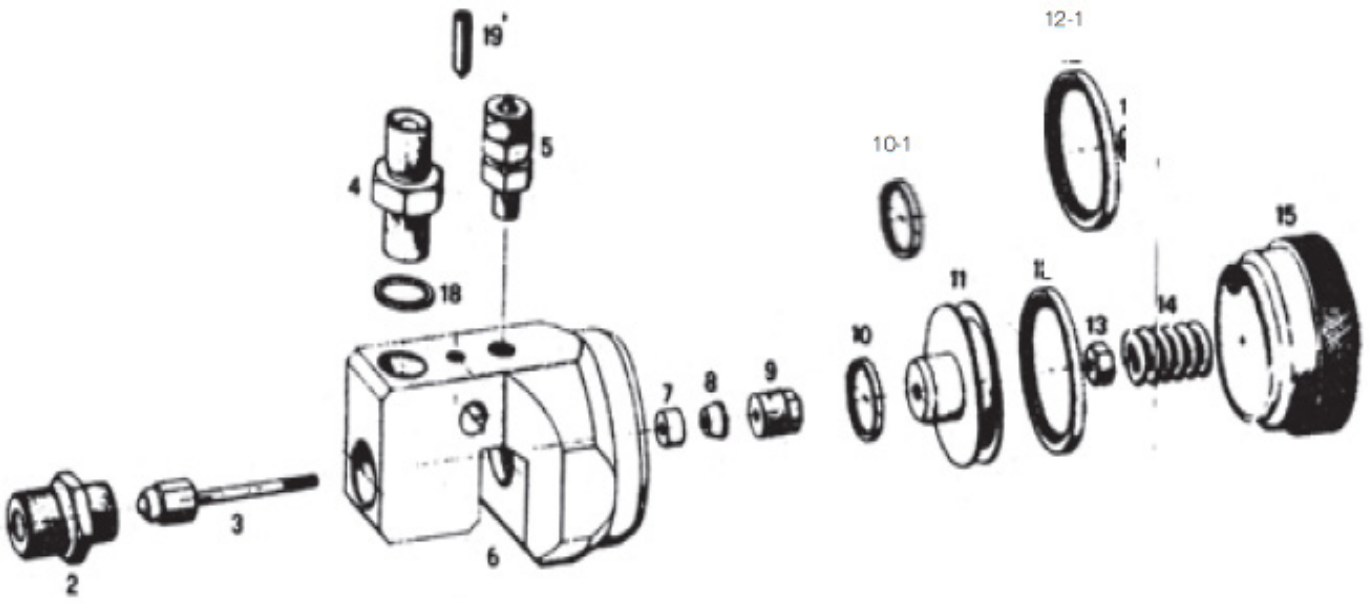

Code	pos.	Description
109011	2	Gun head 11/16”
109013	3	Complete needle
151414	4	Fluid inlet
110418	5	Air inlet
109061	6	Gun body
109024	7	Needle gasket and screw
109025	8	Wedge
109026	9	Needle gasket screw
109062	10	External lubroring
109062-1	10-1	External lubroring O-ring
109063	11	Piston
109064	12	Internal lubroring
109064-1	12-1	Internal lubroring O-ring
109028	13	Needle nut
109065	14	Pressure spring
109066	15	Movement regulator
109022	18	Copper gasket
109067	19	Gun locking grain
VS00500A	2/3/7/8	Repair kit VSA

HG 74S

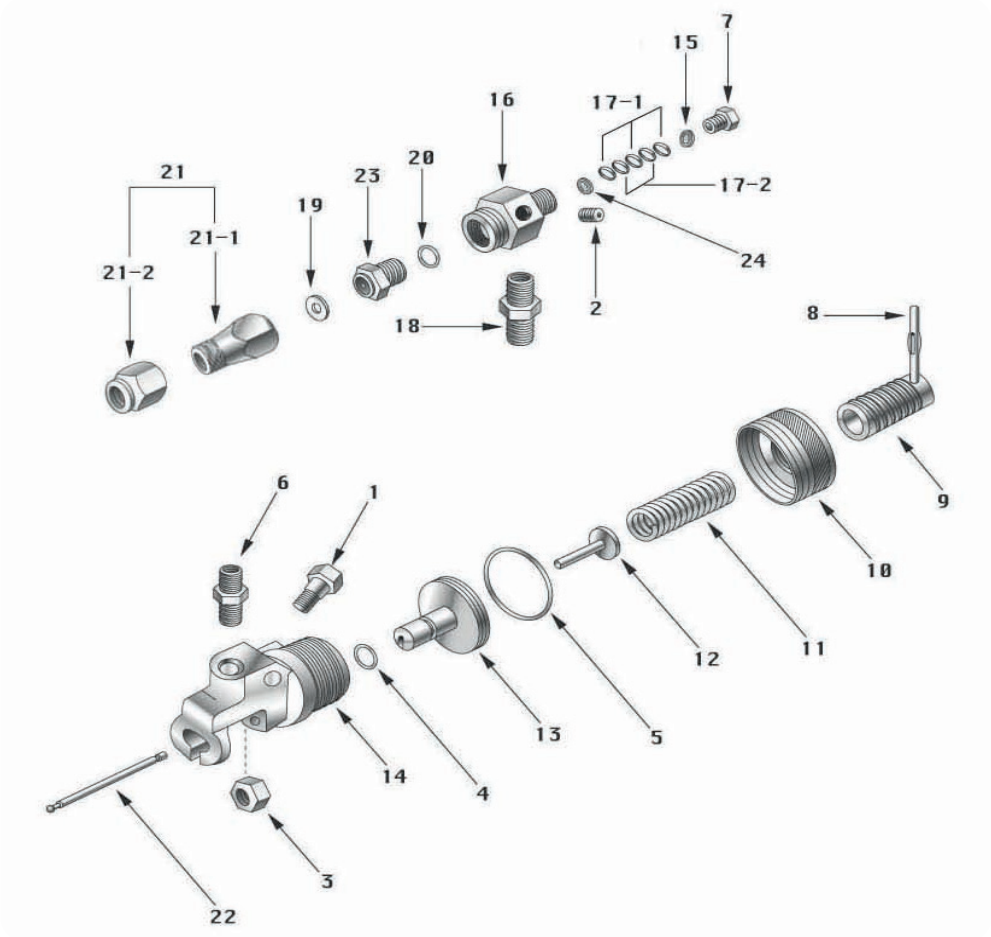

Code	pos.	Description
HG74001	1	Screw
HG74002	2	Grain
HG74003	3	Nut
HG74004	4	O-ring
HG74005	5	O-ring
HG73007	6	Nipple
HG74007	7	Nut
HG74008	8	Pin
HG74009	9	Spring regulation
HG74010	10	Ring
HG74011	11	Spring
HG74012	12	Guide
HG74013	13	Piston
HG74015	15	Gasket
HG74016	16	Connection body
HG74017	17	Gasket
HG74171	17-1	PTFE Gasket
HG74172	17-2	Carbide gasket
HG73007	18	Nipplo
HG30N020	19	Gasket
HG71005	20	Gasket
HG74021	21	Locking nut and nozzle support
HG74022	22	Needle
HG74023	23	Nozzle seat
HG74024	24	Gasket
HRG740		Gun Repair kit HG 74S

VS 500

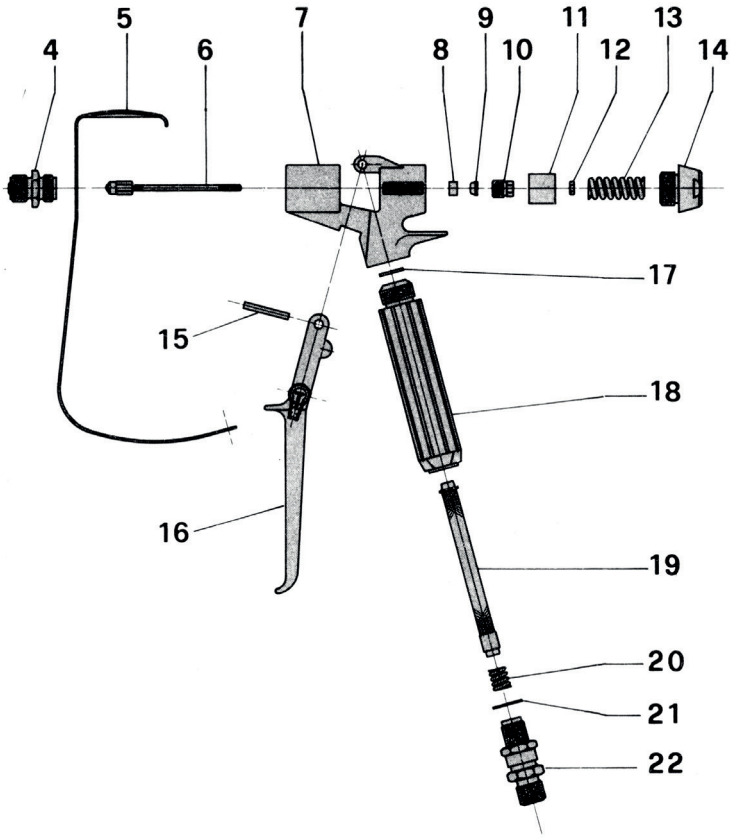

Code	pos.	Description
109011	4 *	Gun head 11/16”
10901178	4	Gun head 7/8"
109012	5	Hand protection
109013	6 *	Complete needle
109014	7	Gun body
109024	8 *	Needle gasket and screw
109025	9 *	Wedge
109026	10	Needle gasket screw
109027	11	Pressure piston
109028	12	Needle nut
109029	13	Pressure spring
109019	14	Back nut
109015	15	Trigger screw
109018	16	Complete Trigger
109017	17	Handle gasket
109021	18	Handle
350XXX	19	Gun filter
350000	20	Filter spring
109022	21	Copper gasket
109023	22	Swivel fitting M 16 x 1,5
109030	22	Swivel fitting M 1/4”
VS00500	*	Repair kit VS 500

VS 300

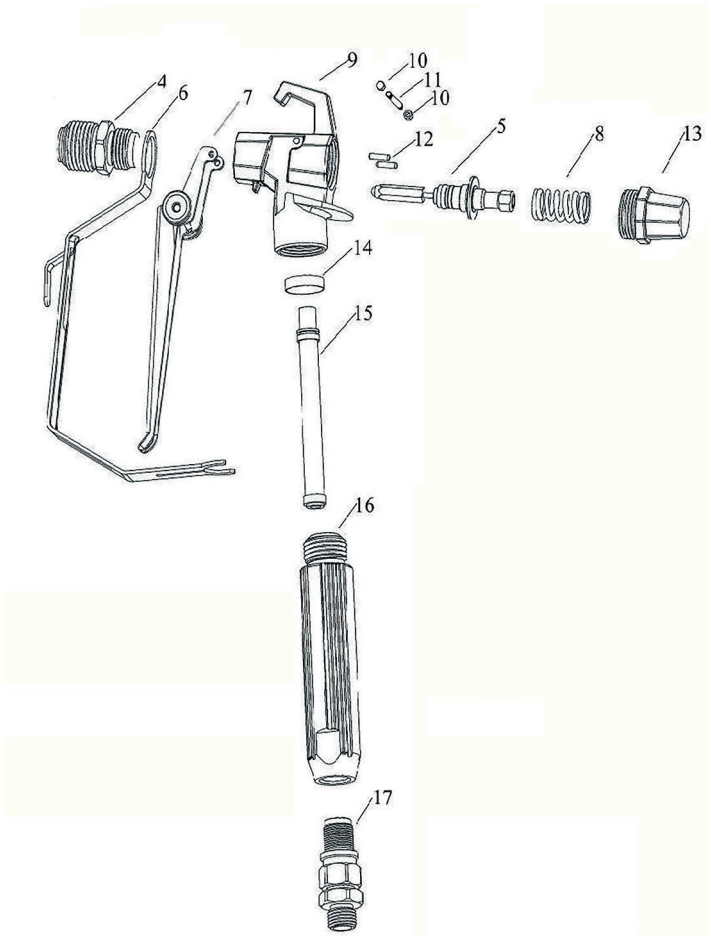

Code	pos.	Description
KIT300VT0	4 / 5	Repair kit VS 300
VS003014	6	Hand protection
VS003026	7	Trigger
VS003018	8	Spring
VS003025	10	Hexagon nut
VS003024	11	Trigger pin
VS003016	12	Pin 2pz
VS003019	13	Cap
VS003020	14	Handle gasket
350XXX	15	Gun filter
VS003022	16	Handle
109023	17	Swivel fitting M 16 x 1,5
109030	17	Swivel fitting M 1/4”

VS 818

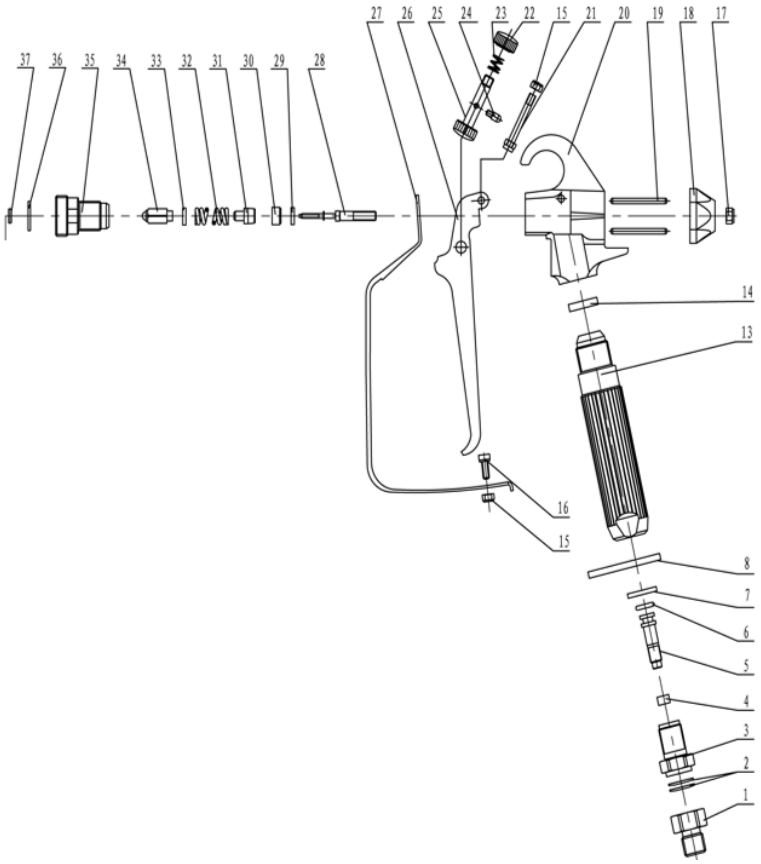

Code	pos.	Description
109030	1/ 2 / 3/ 4 / 5 / 6 / 7	Swivel fitting M 1/4”
818R08	8	Trigger support
818R13	13	Handle
818R14	14	Washer
818R15	15	Fixed nut M4
818R16	16	Screw M4x10
818R17	17	Nut M5
818R18	18	Back nut
818R19	19	Pin
818R21	21	Trigger pin
818R22	22 / 23 / 24 / 25	Trigger support complete
818R26	26	Trigger
818R27	27	Handle guard
818R28	28 to 34	Full awl
818R35	35 to 37	Sleeve
818KTV0	28 to 37	Repair kit (full awl+sleeve)

VS 360

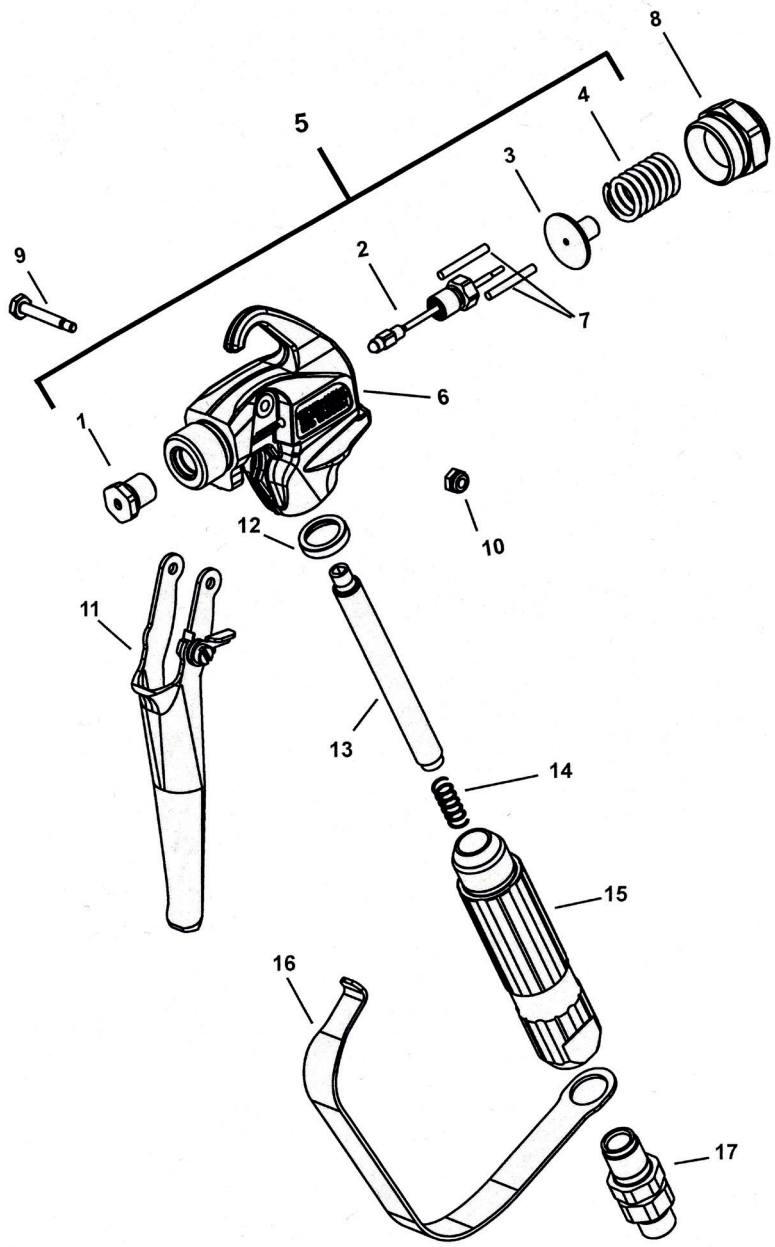

Code	pos.	Description
T503092	5	Repair Kit T 360
T501014	7	Push pins
T500021	8	Back nut
T500027	9	Trigger pin
T500031	10	Trigger pin nut
T501225	11	Trigger
T501018	12	Handle gasket
350XXX	13	Gun filter
350000	14	Filter Spring
T501080	15	Handle
T501024	16	Handle guard
T501035	17	Swivel fitting 1/4”
T501035X	17	Swivel fitting 16x1.5

VS 720

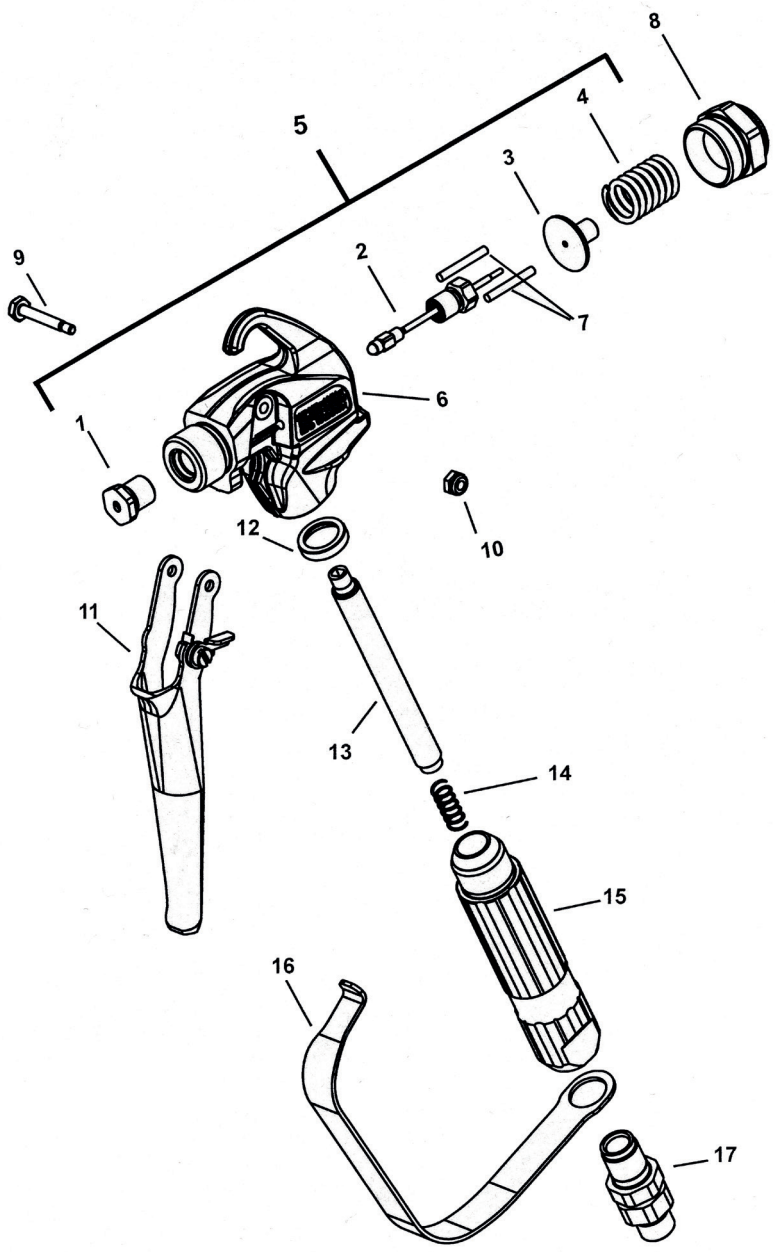

Code	pos.	Description
T506092	5	Repair Kit T720
T501052	6	Gun body 11/16
T501014	7	Push pins
T500021	8	Back nut
T500027	9	Trigger pin
T500031	10	Trigger pin nut
T501225	11	Trigger
T501018	12	Handle gasket
350XXX	13	Filter
350000	14	Filter Spring
T501054	15	Handle
T501024	16	Handle guard
T501335	17	Swivel fitting 1/4”
T501035X	17	Swivel fitting 16x1.5

VS 650

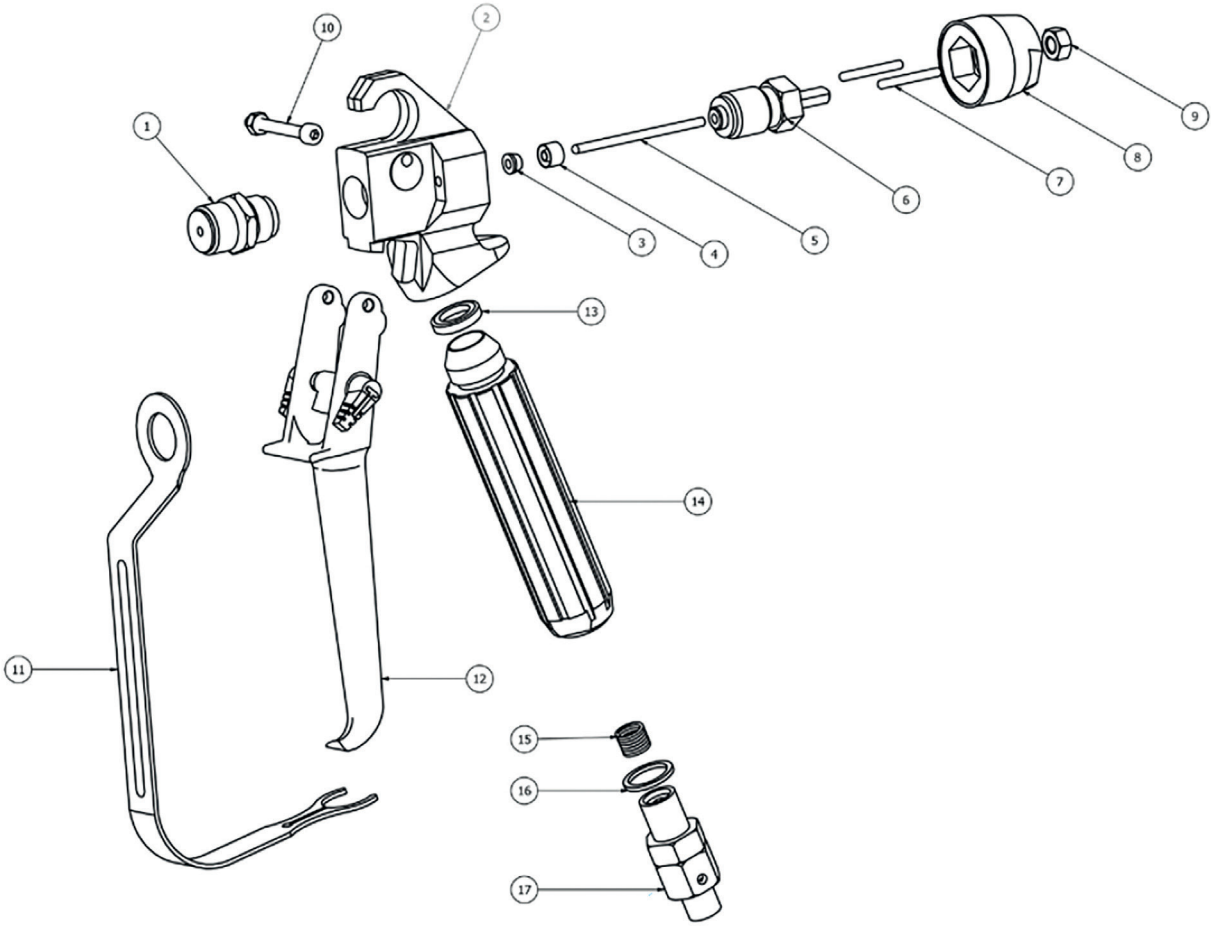

Code	pos.	Description
M76102	1	Gun head
M77105	3	Pressure wedge
M77104	4	Needle gasket and screw
M79513	5	Complete needle
M79512	6	Regulation body
M19612	7	Locking pin
M736	8	Regulation cap
M79011	9	Locking nut
M77111	10	Trigger pin
M79010	11	Handle guard
M79150	12	Trigger
M77117	13	Handle gasket
M77112	14	Handle
350000	15	Filter Spring
M77114	16	Copper washer
109023	17	Swivel fitting M 16 x 1,5
109030	17	Swivel fitting M 1/4”

PRO LIGHT 500

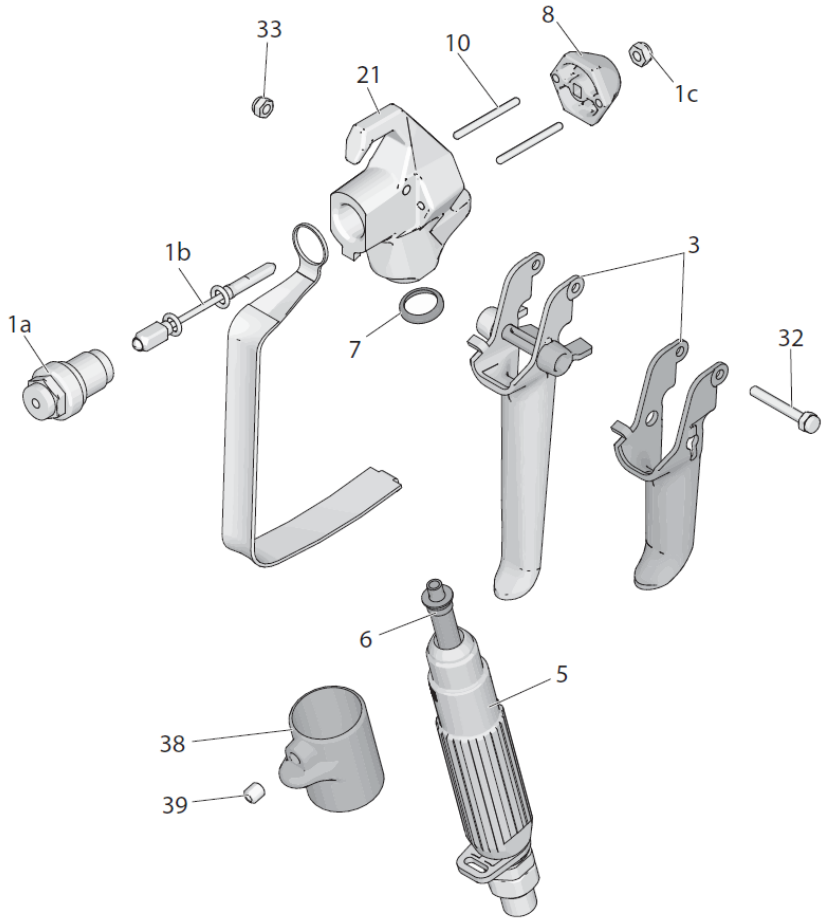

CODE	POS.	DESCRIPTION
G288817	1a / 1b / 1c	Repair kit
G255127	3	Trigger set 2 fingers
G255126	3	Trigger set 4 fingers
G195495	4	Handle guard
17M532	5	Handle
350XXX	6	Gun filter
G179733	7	Gasket
G195395	8	Back cap
G115484	10	Pin 2pz
G177538	32	Trigger pin
G105334	33	Nut

MASTIC 24E

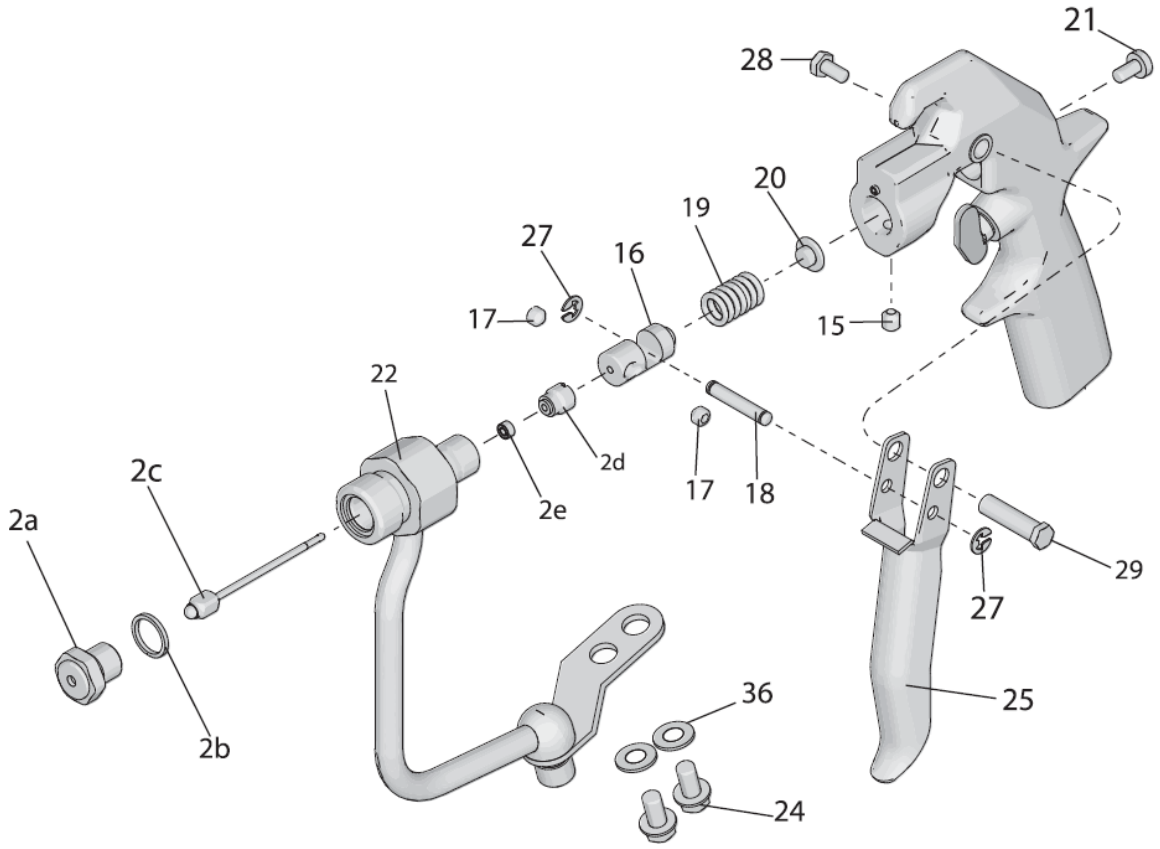

Code	pos.	Description
237260	2a / 2b / 2c / 2d / 2e	Repair kit
G102207	15	Locking screw
G189960	16	Spring guide
G112729	17	Locking screw
G189958	18	Trigger pin
G102924	19	Spring
G189990	20	Spring support
G110637	21	Screw regulation
G237694	22	Fluid inlet set
G112774	24	Screw
G189974	25	Trigger
G112410	27	Seeger
G187965	28	Trigger pin
G203953	29	Trigger pin screw
G110755	36	Washer

HG72P

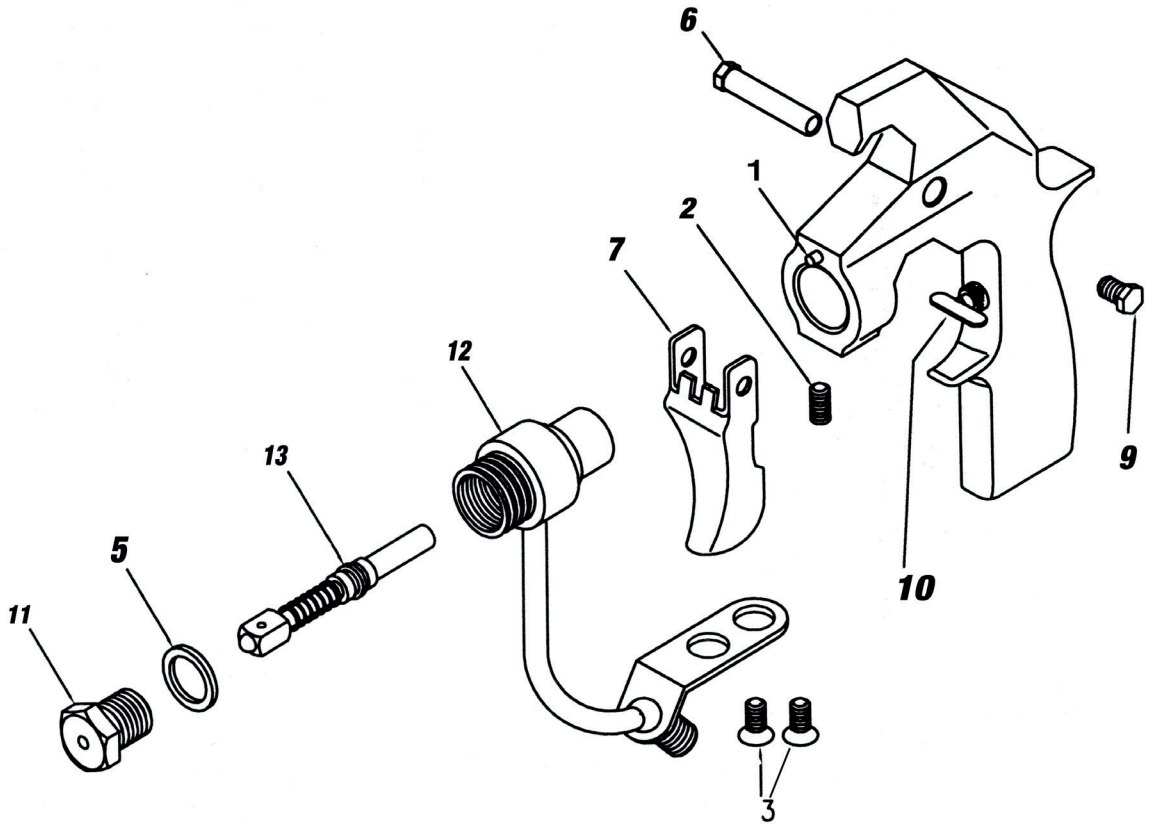

Code	pos.	Description
HG72P01	1	Standard nozzle seal
HG72P02	2	Gun head
HG72P03	3	Sleeve seal
HG72P04	4	Complete Needle
HG72P05	5	Fluid inlet set
HG72P06	6	Trigger
HG72P07	7	Grain
HG72P08	8	Locking pin
HG72P09	9	Trigger pin
HG72P10	10	Gun body
HG72P11	11	Trigger screw
HG72P12	12	Security lock
HG72P13	13	Fluid assembly screw

HG 76

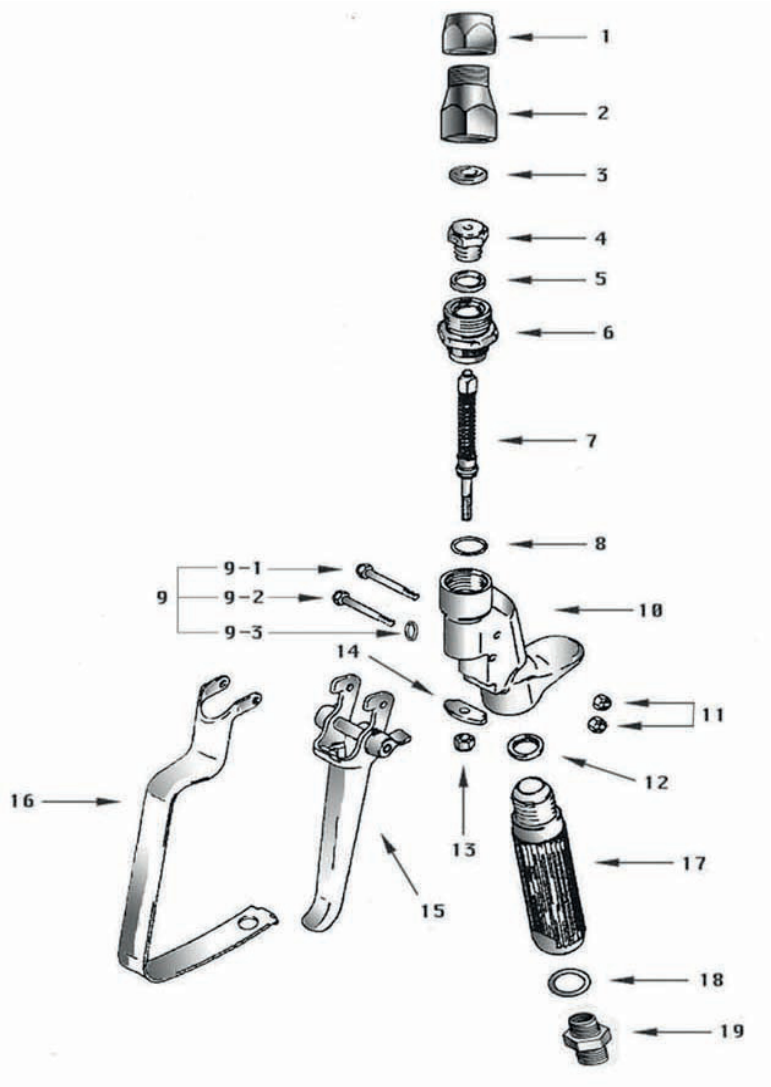

Code	pos.	Description
HG30N001	1	Tip locking ring
HG30N002	2	Tip support
HG30N020	3	Gasket
HG30N003	4	Seat
HG30N004	5	Copper gasket
HG76006	6	Connector
HG30N010	7	Needle Set
HG76008	8	Seat
HG76009	9	Copper washer
HG30N009	11	Nut
HG30N019	12	PTFE gasket
HG30N013	13	Nut
HG76014	14	Support
HG46015	15	Set Trigger
HG76016	16	Handle guard
HG30N015	17	Handle
HG30N016	18	Copper washer
HG76019	19	Fluid inlet

PRO FOREX

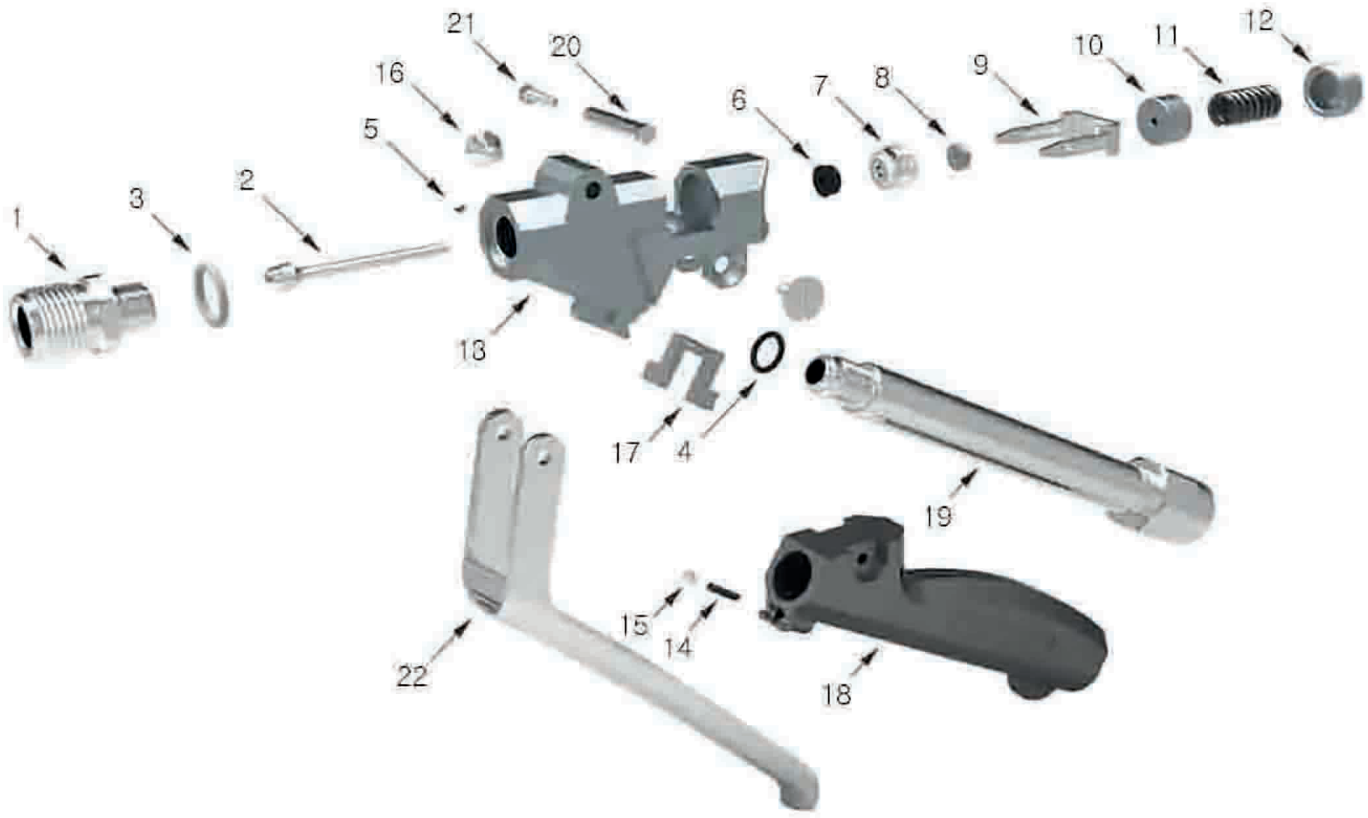

Code	pos.	Description
HG61001	1	Stainless steel seat
HG61002	2	Stainless steel needle set
HG61003	3	O-ring PTFE
HG61004	4	Locking O-ring
HG61005	5	Grain
HG61006	6	V-Gasket in polyurethane
HG61007	7	Locking screw
HG61008	8	Needle Nut
HG61009	9	Locking Block
HG61010	10	Spring support
HG61011	11	Spring
HG61012	12	Regulation Nut
HG61014	14	Spring Trigger
HA64007	15	Ball 1/8”
HG61016	16	Trigger screw
HG61017	17	Trigger support
HG61018	18	Handle cover
HG61019	19	Handle
HG61020	20	Trigger pin
HG61021	21	Trigger pin screw
HG61022	22	Trigger

AB2 1:1 TWO-COMPONENTS

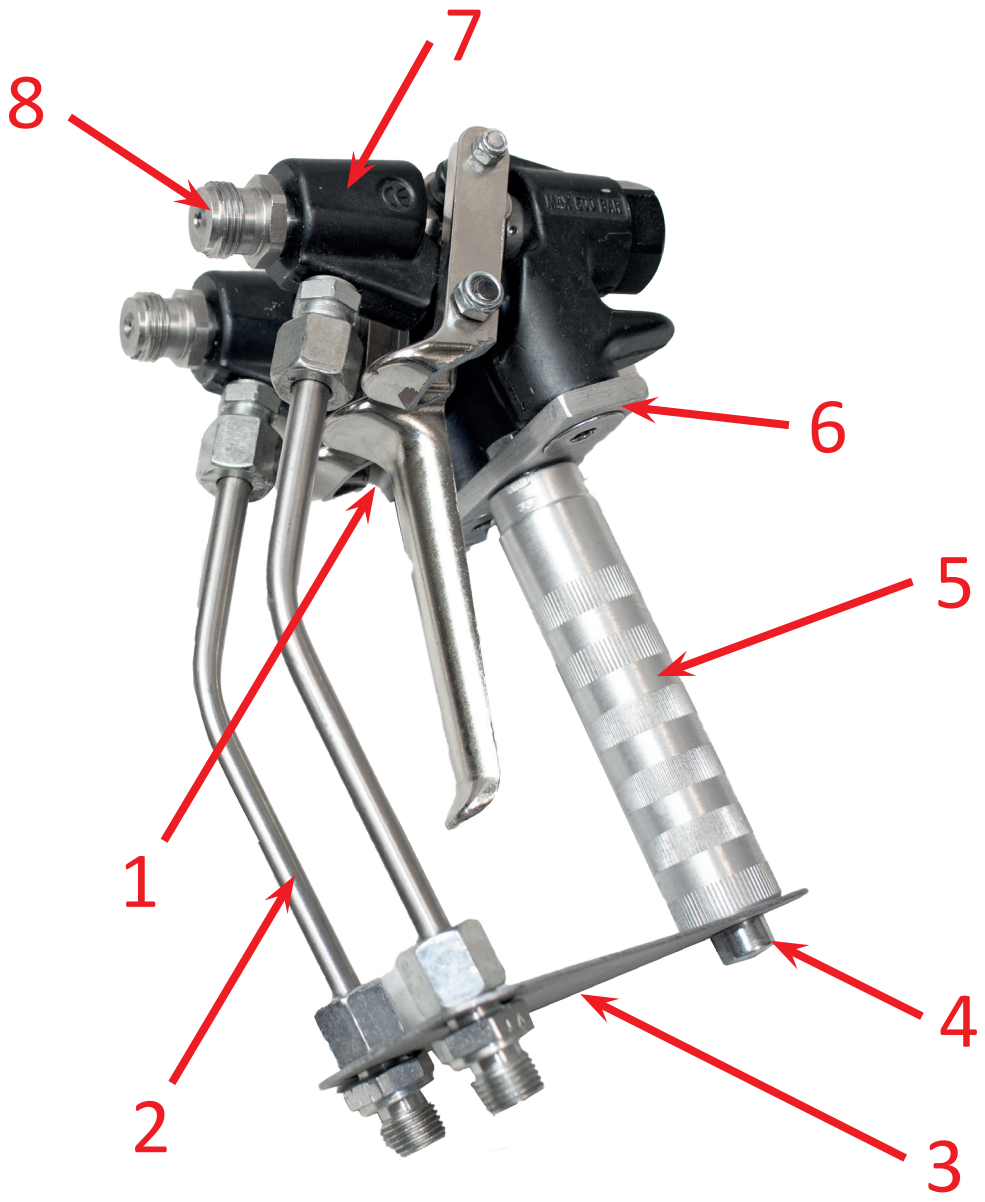

CODE	POS.	DESCRIPTION
AB2R01	1	Double Trigger complete
AB2R02	2	Fluid hose FM 1/4"
AB2R03	3	Support plate
AB2R04	4	Locking screw
AB2R05	5	Handle
AB2R06	6	Gun body seat
109014	7	Gun body VS 500
VS00500	8	Complete Repair kit VS 500

RES12 1:1 TWO-COMPONENTS

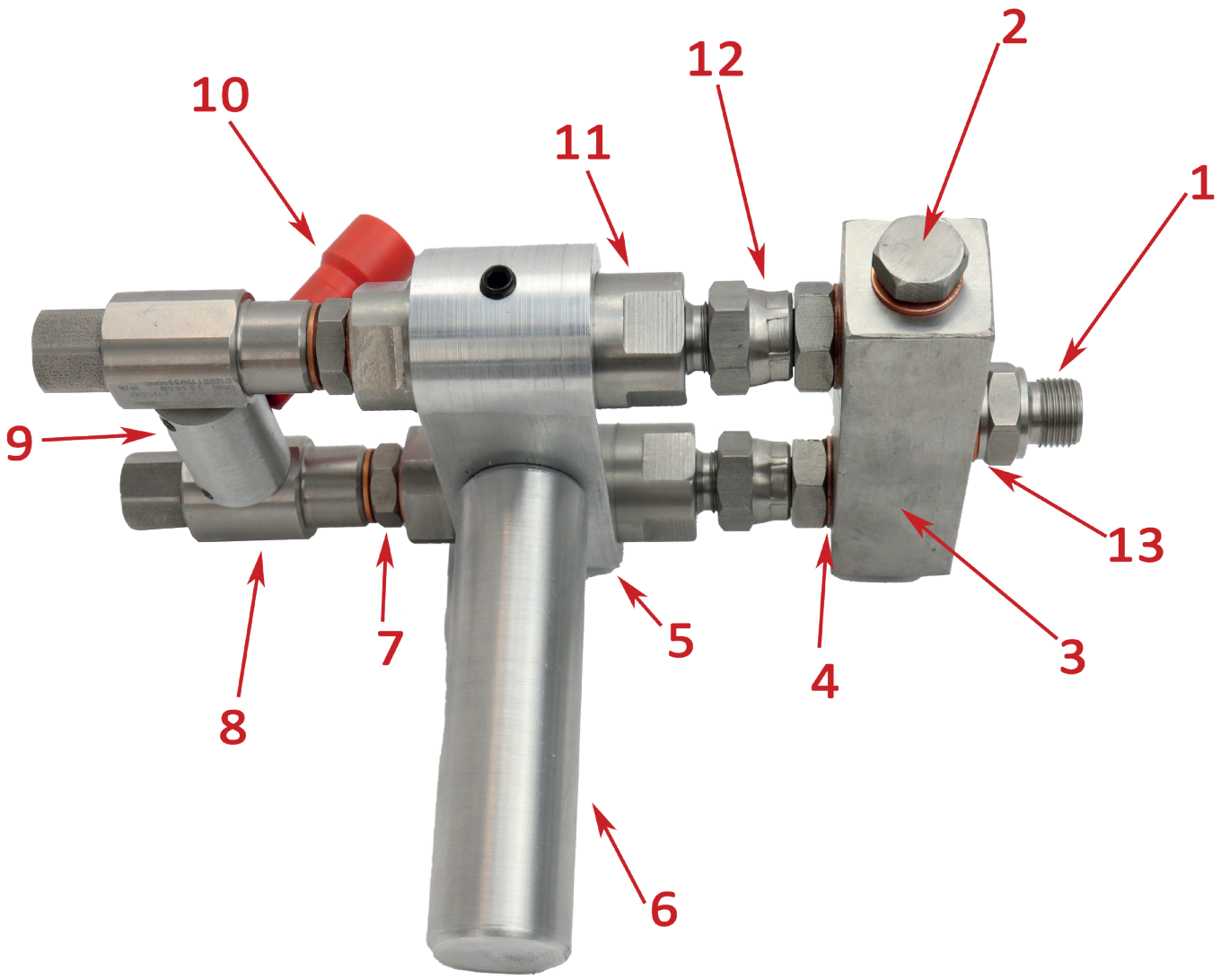

CODE	POS.	DESCRIPTION
123R001	1	Gun head 11/16"
181400	2	Stainless steel cap M 1/4”
123R003	3	Mixer block
155038	4	Copper washer 3/8”
123R005	5	Junction block
123R006	6	Gun Handle
163814	7	Stainless steel inlet HA 1/4” x 3/8”
023050	8	High Pressure, Stainless steel valve HA mini FF 1/4”
123R008	9	Control base
123R009	10	Control lever
30200	11	High Pressure non-return valve HA M 3/8” removable
183838	12	Stainless steel Nut FG 3/8” x M 3/8”
R183800i	13	Spacer Washer 3/8"

VS 23

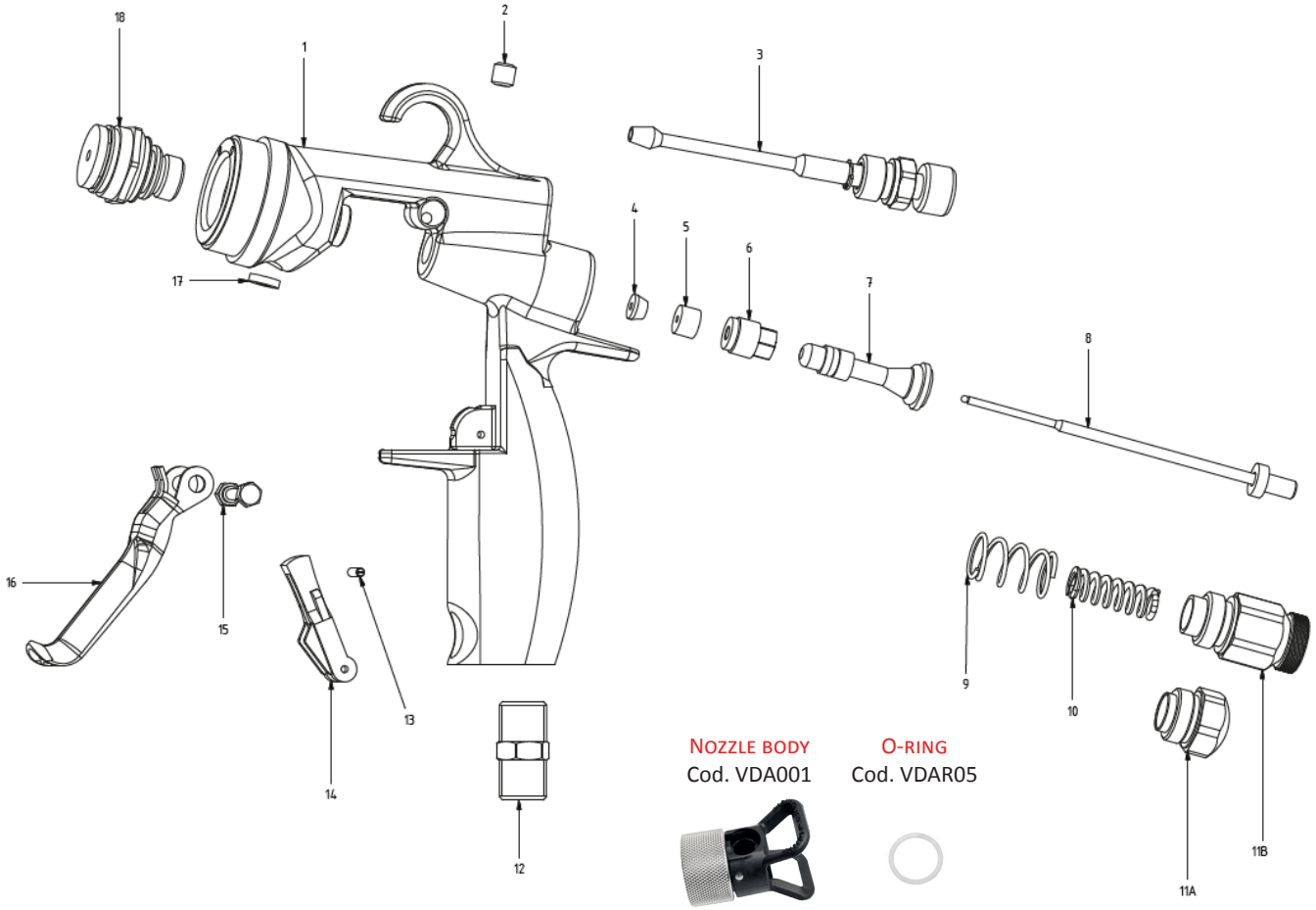

NOZZLE BODY
Cod. VDA001

O-RING
Cod. VDAR05

CODE	POS.	DESCRIPTION
23VS002	2	Grain
23VS003	3	Fan regulation set
23VS004	4	Pressure wedge
23VS005	5	Fluid needle gasket
23VS006	6	Fluid needle screw
23VS007	7	Air valve complete
23VS008	8	Needle Set
23VS009	9	Air valve spring
23VS0010	10	Needle spring
23VS011A	11A	Back cap
23VS0012	12	Air inlet 1/4”
23VS0013	13	Pin
23VS0014	14	Safety lock
23VS0015	15	Trigger pin
23VS0016	16	Trigger
23VS0017	17	Sealing gasket
23VS0018	18	Gun head
VDA001		Reversible tip guard Arimix
VDAR05		O-ring
TUFXXX		Rev tipUltra Finish

VS 21

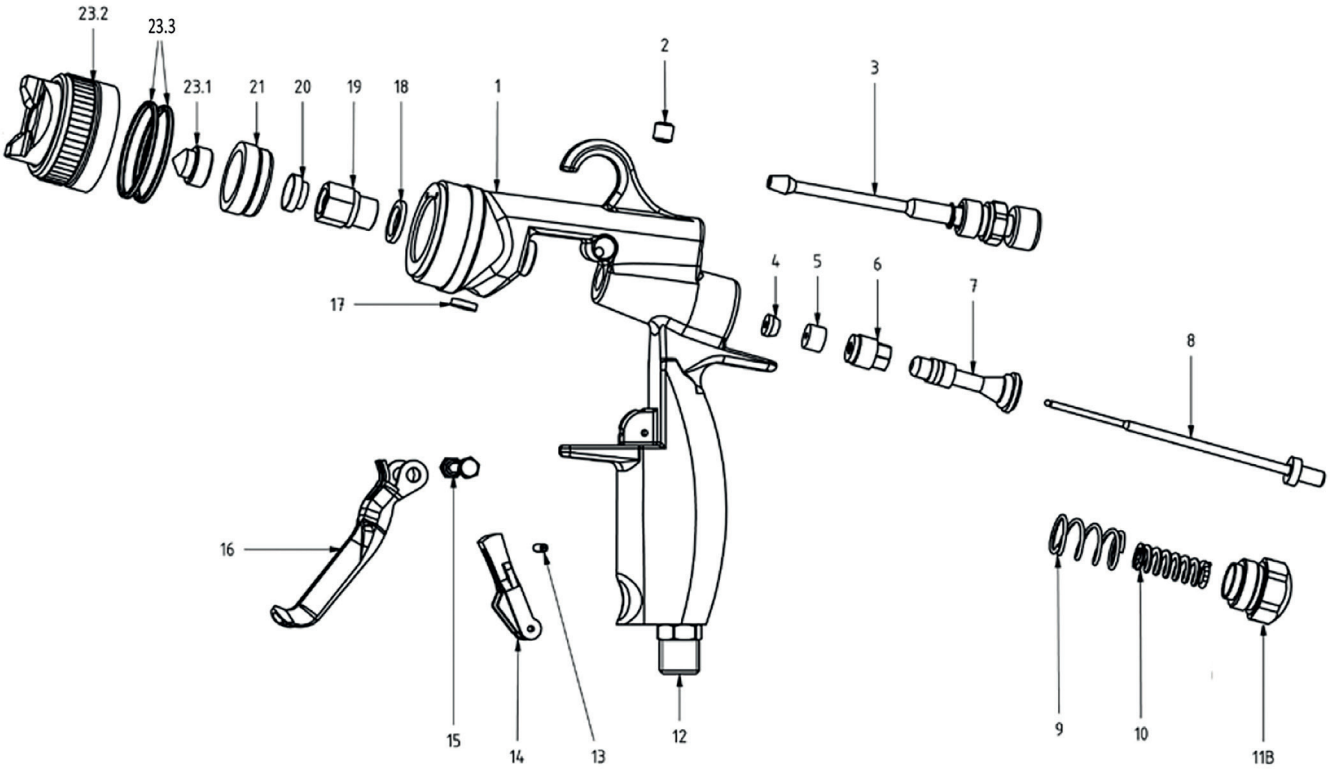

Code	pos.	Description
21VS002	2	Wedge
21VS003	3	Fan regulation set
21VS004	4	Pressure wedge
21VS005	5	Fluid needle gasket
21VS006	6	Fluid needle screw
21VS007	7	Air valve complete
21VS008	8	Needle Set
21VS009	9	Air valve spring
21VS010	10	Needle spring
21VS11B	11B	Back cap
21VS012	12	Air inlet 1/4”
21VS013	13	Pin
21VS014	14	Safety lock
21VS015	15	Trigger pin
21VS016	16	Trigger
21VS017	17	Sealing gasket
21VS028	18	Copper washer
21VS019	19	Gun head
21VS020	20	Nozzle seat gasket
21VS021	21	Seat sealing gasket
E460XXX	23-1	Mix Nozzle type Wagner GM 3000 / 4600
VRWA18R	23-2	RED air cap complete type Wagner
VBWA10078S	23-3	Air cap gasket type GM 3000/4600

VS 22

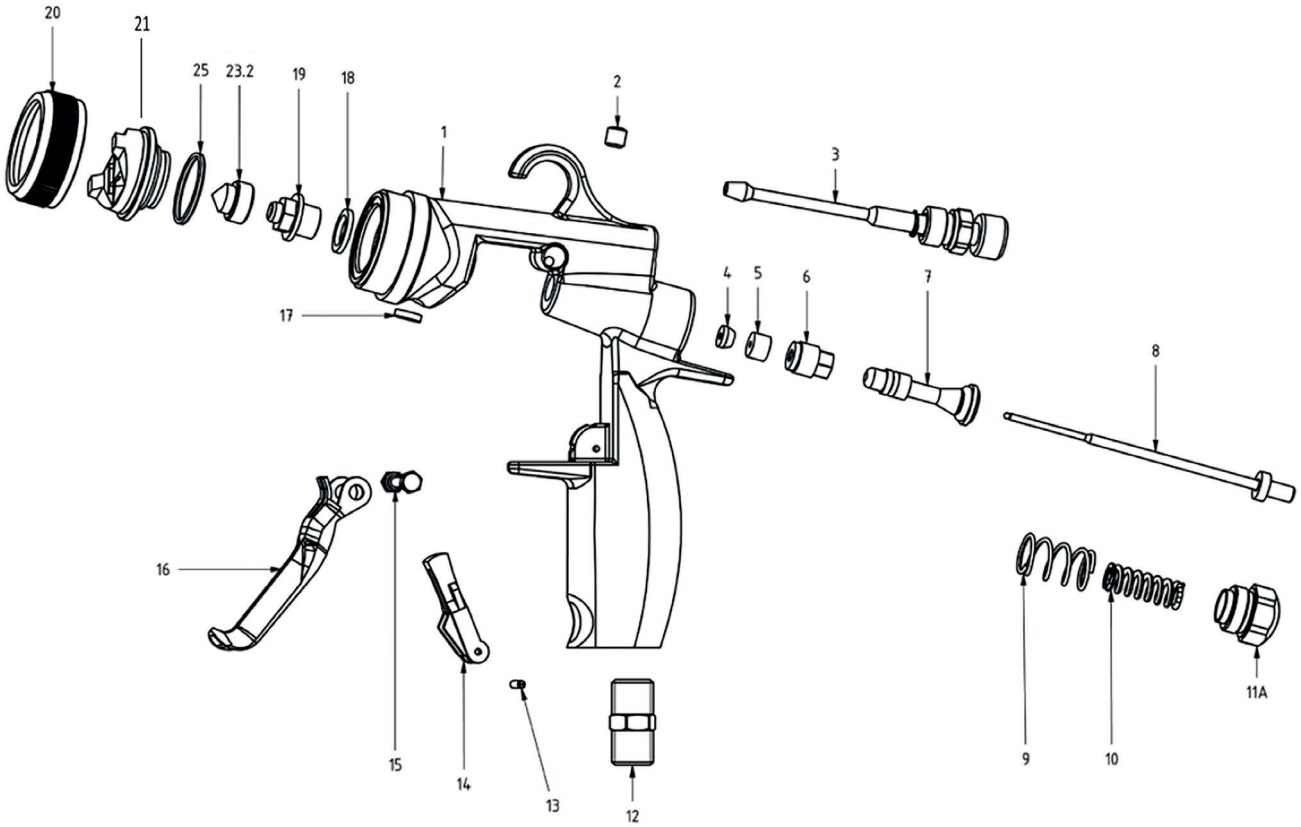

Code	pos.	Description
22VS002	2	Wedge
22VS003	3	Fan regulation set
22VS004	4	Pressure wedge
22VS005	5	Fluid needle gasket
22VS006	6	Fluid needle screw
22VS007	7	Air valve complete
22VS008	8	Needle set
22VS009	9	Air valve spring
22VS010	10	Needle guide
22VS11B	11A	Back cap
22VS012	12	Air inlet 1/4”
22VS013	13	Pin
22VS014	14	Safety lock
22VS015	15	Trigger pin
22VS016	16	Trigger
22VS017	17	Sealing gasket
22VS028	18	Seat sealing gasket
22VS019	19	Nozzle seat
OPTGXXX	20	Air cap ring type Optima 2000
OPTCXXX	21	Air nozzle type Optima 2000
OPTXXX	23-2	Fluid nozzle type Optima 2000
102003	25	Air nozzle gasket

VS 41 LIGHT

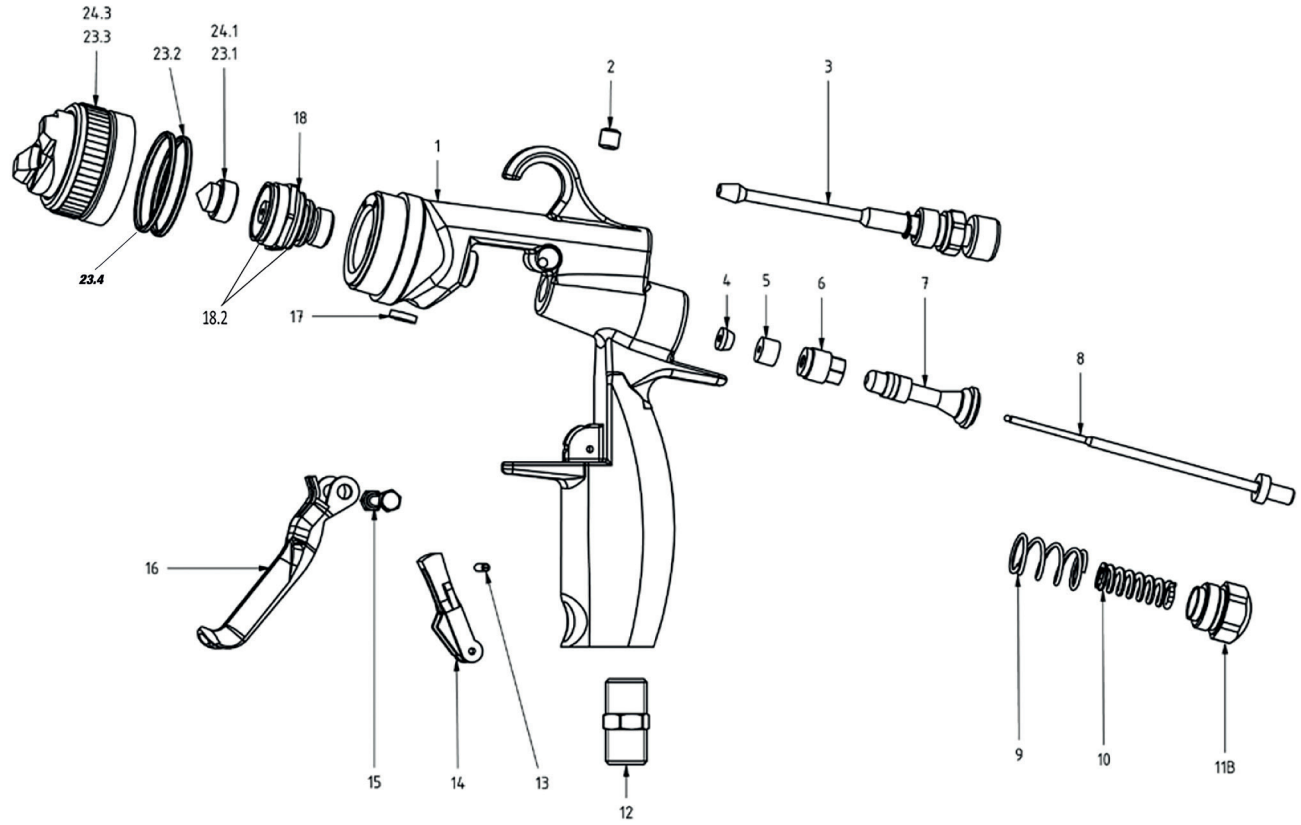

Code	pos.	Description
41VS002	2	Wedge
41VS003	3	Fan regulation Set
41VS004	4	Pressure wedge
41VS005	5	Fluid needle gasket
41VS006	6	Fluid needle screw
41VS007	7	Air valve complete
41VS008	8	Needle set
41VS009	9	Air valve spring
41VS010	10	Needle spring 200 bar
41VS210	10	Needle spring 120 bar
41VS11B	11B	Back cap
41VS012	12	Air inlet 1/4”
41VS013	13	Pin
41VS014	14	Safety lock
41VS015	15	Trigger pin
41VS016	16	Trigger
41VS017	17	Sealing gasket
41VS018	18	Gun head
VSKR0S4	18-2	Sleeve gasket type Kremlin cf. 10 pz
E554XXXX	23-1	Mix nozzle type Kremlin
E552XXXX	24-1	Pre-atomized Kremlin type nozzle
VSKR0S9	23-2	Air Cap gasket 10 pieces package
UKSVT01	23-3	Air Cap type VX24 (Standard included)

R-2200 AC

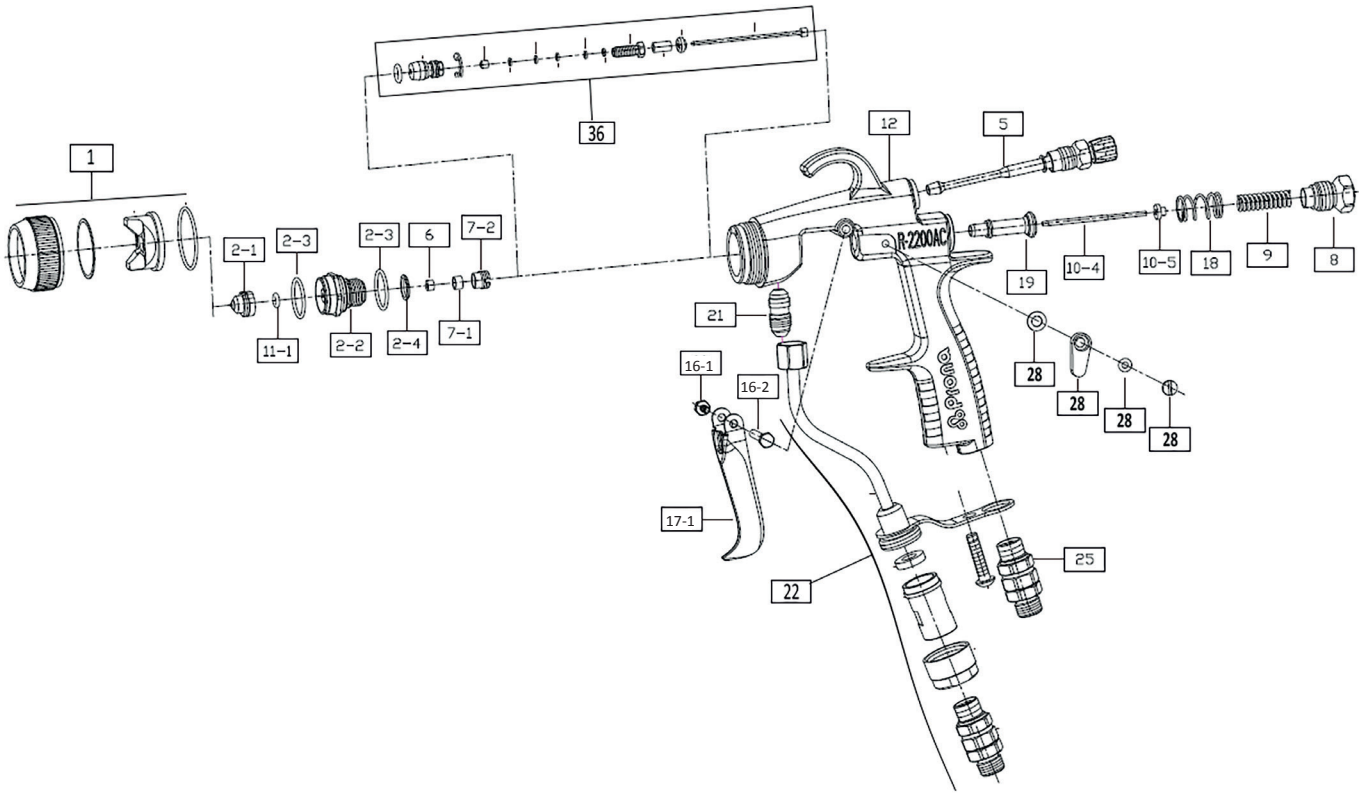

Code	pos.	Description
UKSVT01	1	Air Cap type VX24 (Standard included)
E554XXXX	2-1	Mix nozzle type Kremlin
200AC022	2-2	Sleeve
VSKR0S4	2-3	Sleeve gasket type Kremlin
VSKR0S6	2-4	Back sleeve gasket type Kremlin
200AC005	5	Fan regulation set
200AC006	6	Fluid needle gasket
200AC071	7-1	Needle guide
200AC072	7-2	Needle guide Nut
200AC008	8	Needle regulation nut
200AC009	9	Needle spring
200AC104	10-4	Fluid regulation
200AC105	10-5	Needle guide
554GCXX	11-1	Nozzle gasket type Kremlin
200AC018	18	Needle regulation spring
200AC019	19	Air regulation valve
PF2200AC	22	Tip filter holder set type Kremlin FG 1/4”
200AC025	25	Tip filter holder set type Kremlin 1/2 Jic
200AC028	28	Fluid connector RFC-HR
200AC036	36	Trigger set
200AC161	16-1	Trigger pin
200AC162	16-2	Trigger pin screw
200AC171	17-1	Trigger
200AC180	16-1+ 16-2+17-1	Complete trigger

XCITE KREMLIN

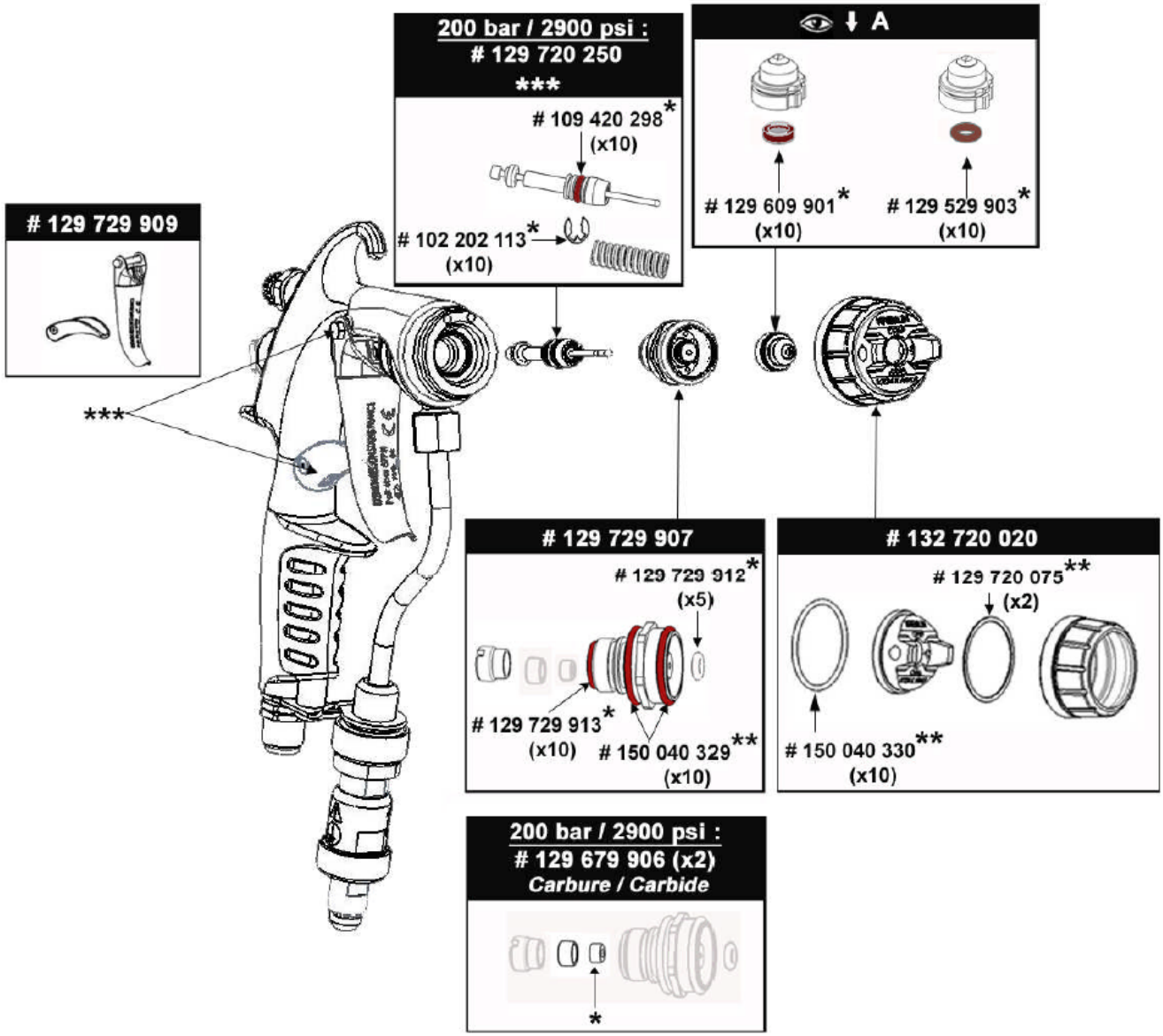

Code	rif oem	Description
VSKN1060	129.720.250	Needle set complete type Kremlin Xcite
VSBKR00X	129.609.901	Tip filter type Kremlin75 / 100 / 140 M
554GCXX	129.529.903	Nozzle gasket type Kremlin
UKSVT01	132.720.020	Air Cap type VX 24
VSKR0S9	150.040.330	Air Cap gasket conf. 10 pz
VSKR0S5	129.720.075	Air nozzle gasket conf. 2 pz
VSKN1066	129.729.912	Front sleeve gasket type Kremlin Xcite conf. 5 pz
VSKR0S4	150.040.329	Middle sleeve gasket type Kremlin Xcite conf. 10 pz
VSKR0S6	129.129.913	Back sleeve gasket type Kremlin Xcite conf. 10 pz
E554XXXX	134.5XX.XXX	Mix nozzle type Kremlin
E552XXXX	132.5XX.XXX	Pre-atomized Kremlin type nozzle
PF2200AC	129.720.085	Tip filter holder set type Kremlin 1/4”

RAR2200AC AUTOMATIC MIX

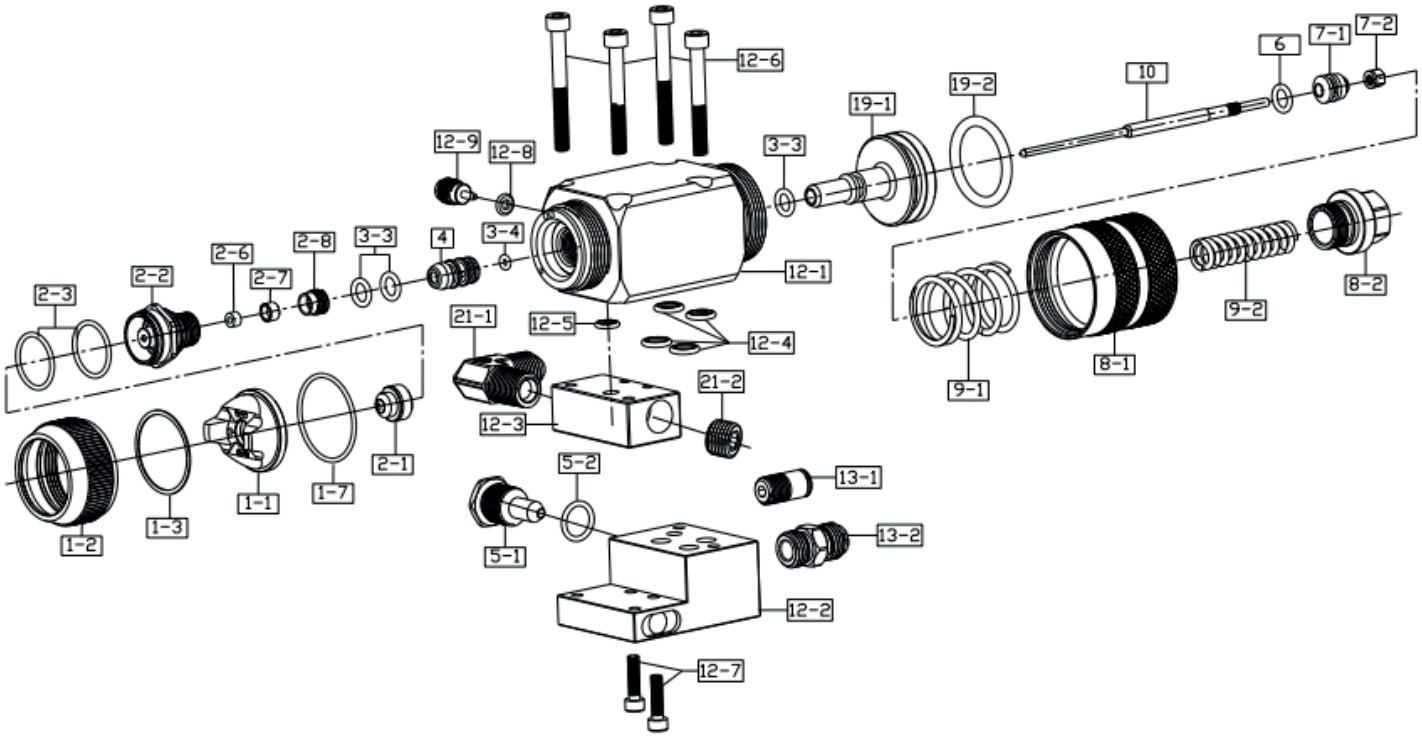

Code	pos.	Description
UKSVT01	1	Air Cap type VX24
E554XXXX	2-1	Mix nozzle type Kremlin
VS101021	2-2	Gun head
VSKR0S4	2-3	Gasket gun head
41AC026	2-6	Gasket rear gun head
41AC027	2-7	Needle seat gasket
41AC028	2-8	O'ring seat seal nut
41AC033	3-3	O-ring P7
41AC051	5-1	Fan regulation
41AC052	5-2	Fan regulation gasket
41AC006	6	Needle gasket
41AC071	7-1	Needle guide regulation
41AC072	7-2	Screw needle guide
41AC081	8-1	Needle regulation
41AC082	8-2	Needle guide
41AC091	9-1	Spring regulation 1
41AC092	9-2	Spring regulation 2
VS101011	10+3-4+4	Complete cartridge type AVX

Code	pos.	Description
41AC122	12-2	Base
41AC123	12-3	Gun body base
VSKR0S1	12-4	Gasket base
41AC125	12-5	Gun body gasket
41AC126	12-6	Body screws
41AC127	12-7	Fixing screws
VSKR0S3	12-8	Screw gasket
41AC129	12-9	Screw
41AC131	13-1	Rapid fitting
41AC132	13-2	Air connector
41AC191	19-1	Piston
41AC192	19-2	Piston gasket
41AC211	21-1	Fluid fitting
41AC212	21-2	Base cap

OPTIMA 2100

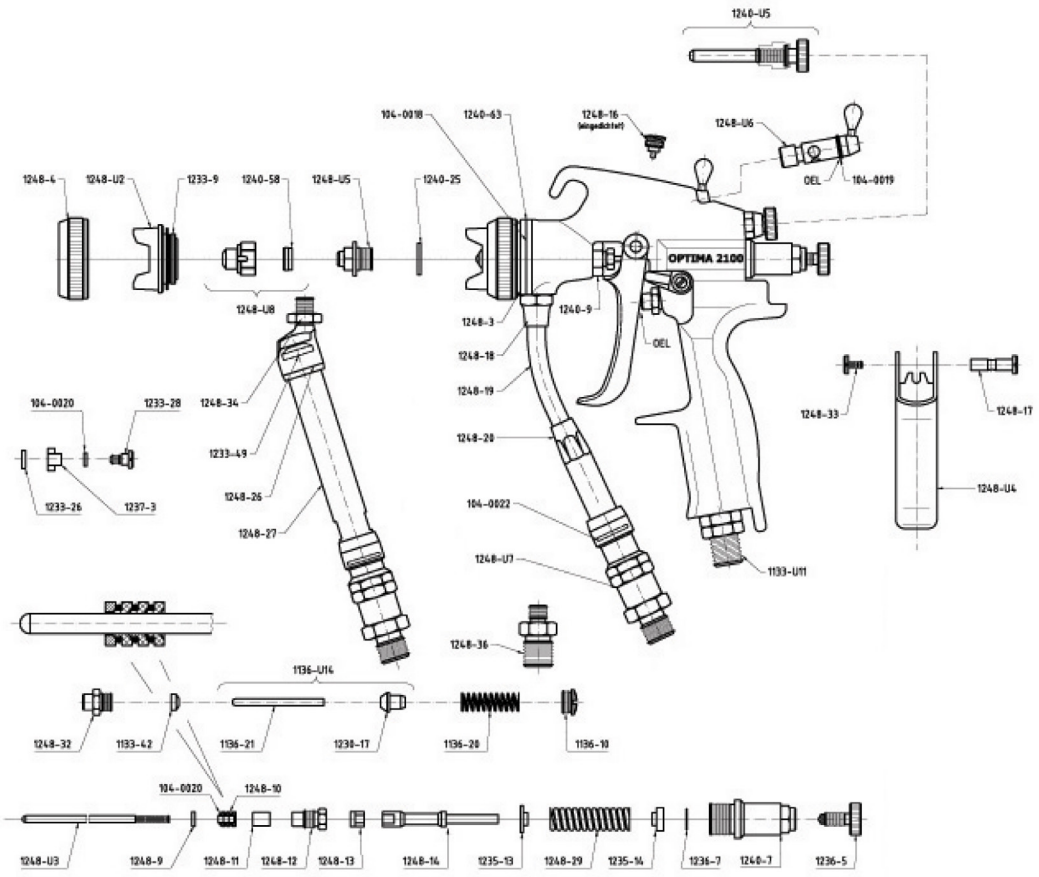

Code	Description
OP2GXXX	Air cap ring
OP2CXXX	Air nozzle
1233-9	Seal Air nozzle
OP2XXX	Nozzle mix 1248-U8
1240-58	Seal nozzle mix
1248-U5	Nozzle
1240-25	Seal nozzle
104-0018	Viton O ring 3,5 x 1
1240-63	O ring
1248-16	Valve cap range
1248-U6	Air adjustment range cpl.
1240-U5	Air valve range
104-0019	O ring viton 7 x 1
1248-33	Trigger stud
1248-17	Trigger pin
1248-U4	Trigger
1233-26	Washer
1237-3	Security
1233-28	Safety screw
1248-34	Fluid connection
1233-49	Gasket
1248-26	Top holder
1248-27	Filter holder
1248-3	Block material
1248-18	Fluid connection
1248-19	Top holder

Code	Description
1248-20	Bottom filter
104-0022	Viton O-ring12 x 1,5
1248-U7	Swivel fitting material
1248-36	Fluid connetion
1240-9	Nut block material
1133-U11	Swivel air fitting M 1/4”
1248-32	Screw Air valve packing
1133-42	Gland Air valve
1136-21	Air valve pin
1230-17	Air valve
1136-20	Air valve spring
1136-10	Air valve cap
1248-U3	Complete needle
1248-9	Spacer
104-0020	O ring viton 4 x 1,2
1248-10	Needle gasket
1248-11	Long spacer
1248-12	Screw rod seals
1248-13	Rod Nut
1248-14	Mounting rod
1235-13	Spring seat fore front
1248-29	Needle spring
1235-14	Spring seat rear rod
1236-7	Needle regulation pin
1240-7	Needle block
1236-5	Needle regulation

OPTIMA 2000

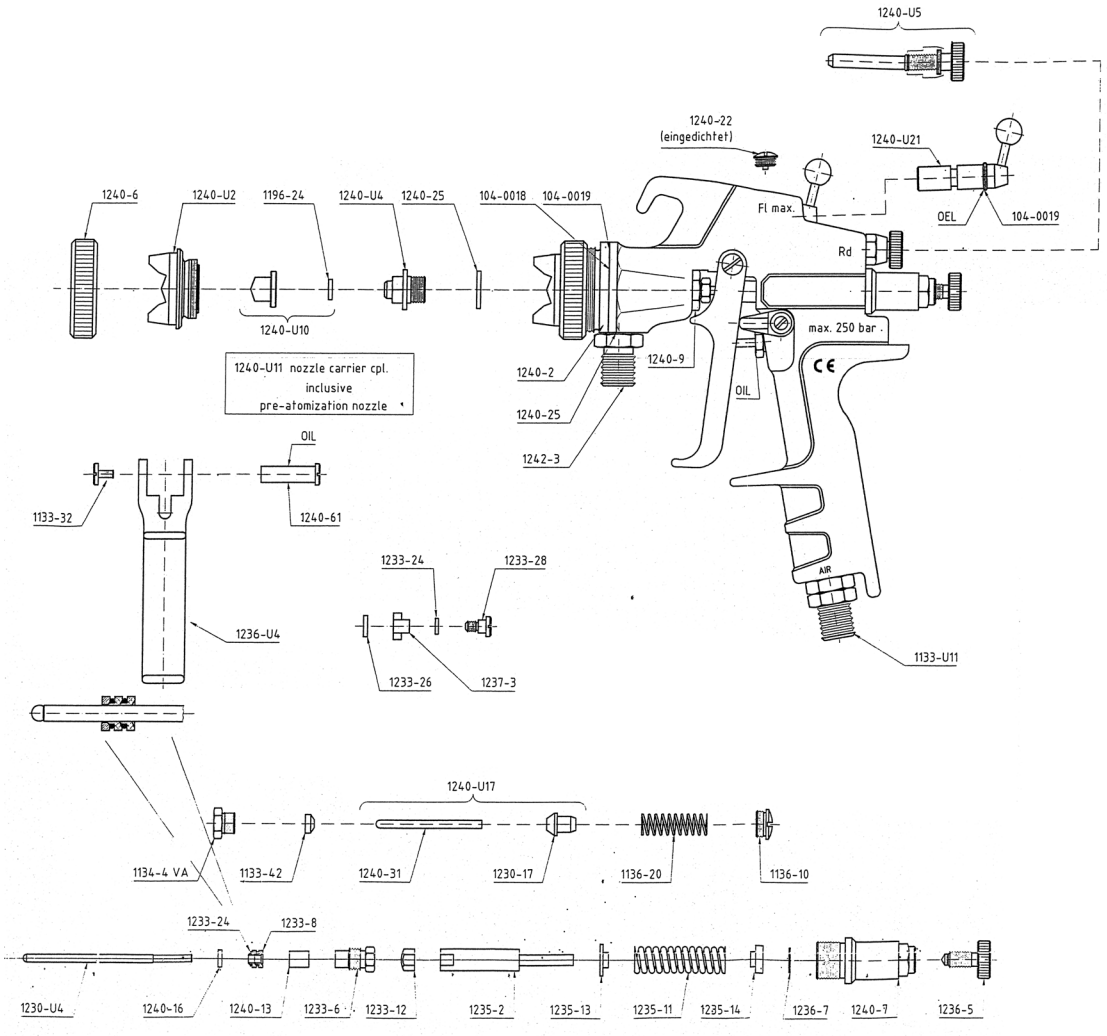

Code	Description
OPTGXXX	Ring
OPTCXXX	Air nozzle
102003	Air nozzle seal
1196-24	Seal nozzle mix
OPTXXX	Nozzle mix 1240-U10
1240-U4	Nozzle
1240-25	Seal nozzle
104-0018	O ring viton 3,5 x 1
104-0019	O ring viton 7 x 1
1240-22	Valve cap range
1240-U21	Air adjustment range cpl.
1240-U5	Air valve range
1133-32	Trigger screw
1240-61	Trigger pin
1236-U4	Trigger
1242-3	Fluid connection M 1/4”
1240-9	Block materialNut
1233-26	Washer
1237-3	Security
1233-28	Safety screw
1133-U11	Swivel fitting aria M 1/4”

Code	Description
1134-4	Screw air valve packing
1133-42	Gland Air Valve
1240-31	Valve pin air
1230-17	Air valve
1136-20	Air valve spring
1136-10	Air valve cap
1230-U4	Rod complete
1240-16	Spacer
1233-24	Viton O-ring4 x 1,2
1233-8	Needle packing
1240-13	Long spacer
1233-6	Screw rod seals
1233-12	Rod nut
1235-2	Mounting rod
1235-13	Spring seat fore front
1235-11	Needle spring
1235-14	Sede Needle guide posteriore
1236-7	Without adjusting rod
1240-7	Locking rod
1236-5	Adjusting rod

OPTIMA 21 LIGHT

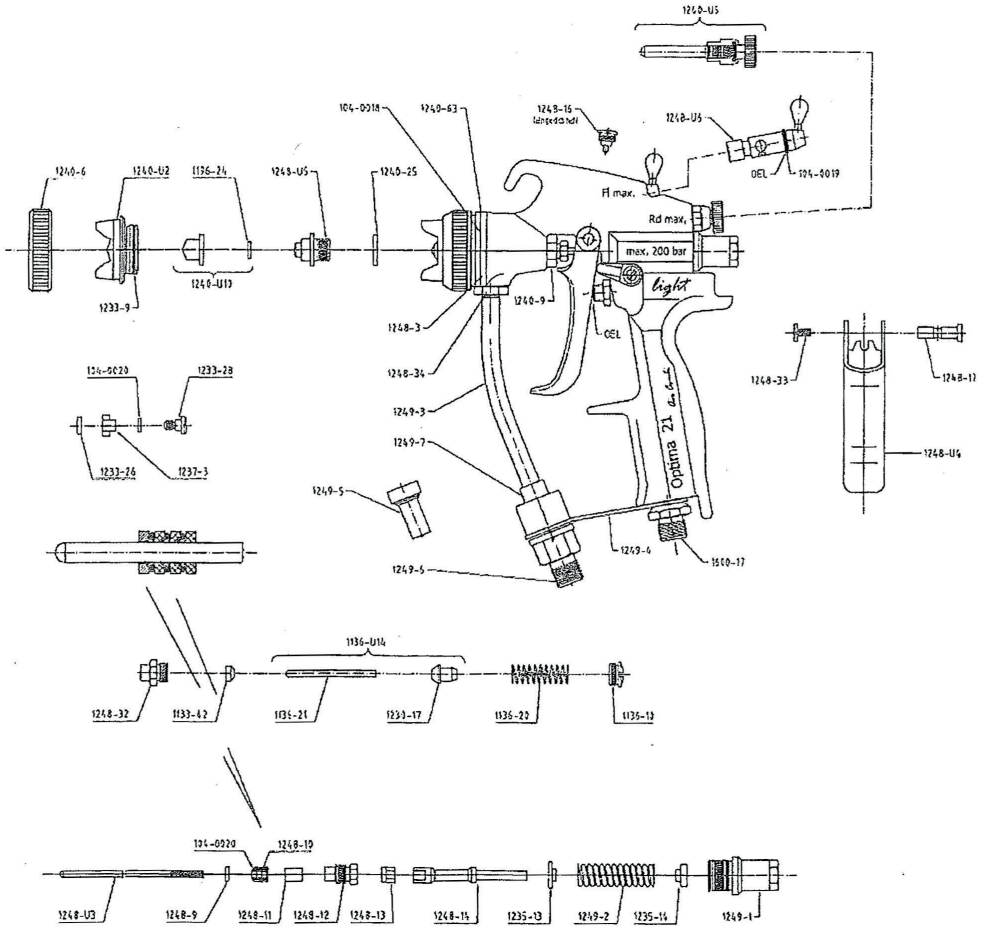

Code	Description
000104-0018	O-ring 3,5 x 1,0 VITON
000104-0019	O-ring 7,0 x 1,0 VITON
000104-0020	O-ring 4,0 x 1,2 VITON
001133-42	Gland Air Valve
001136-U14	Compressed Air Valve
001136-10	Air valve cap
001136-20	Spring
001136-21	Valve pin air
001196-24	Seal nozzle mix
001230-17	Air valve
001233-26	Washer
001233-28	Screw safety
001233-9	Seal air nozzle
001235-13	Spring seat fore front
001235-14	Spring Seat Rear rod
001237-3	Security
001240-25	Seal nozzle
001240-6	Ferrule
001240-63	OR of closure
001240-9	Nut block material
OPTXXX	Nozzle mix
001240-U2	Air nozzle
001240-U5	Regolator range
001240-U3	Complete rod

Code	Description
001248-U4	Trigger
001248-U5	Nozzle
001248-U6	Air adjustment
001248-3	Connector
001248-9	Spacer
001248-10	Needle packing
001248-11	Long spacer
001248-12	Screw rod
001248-13	Rod nut
001248-14	Mounting rod
001248-16	Screw
001248-17	Trigger Stud
001248-32	Screw Air Valve
001248-33	Screw the trigger
001248-34	Lock nut
001249-1	Locking rod
001249-2	Spring
001249-3	Hose made
001249-4	Relay
001249-5	Filter pre-nozzle
001249-6	Fitting 1/4
001249-7	Filter holder
001600-17	Nipple 1/4

LIQUID PRESSURE REDUCER 0-6 BAR

CODE: 400970

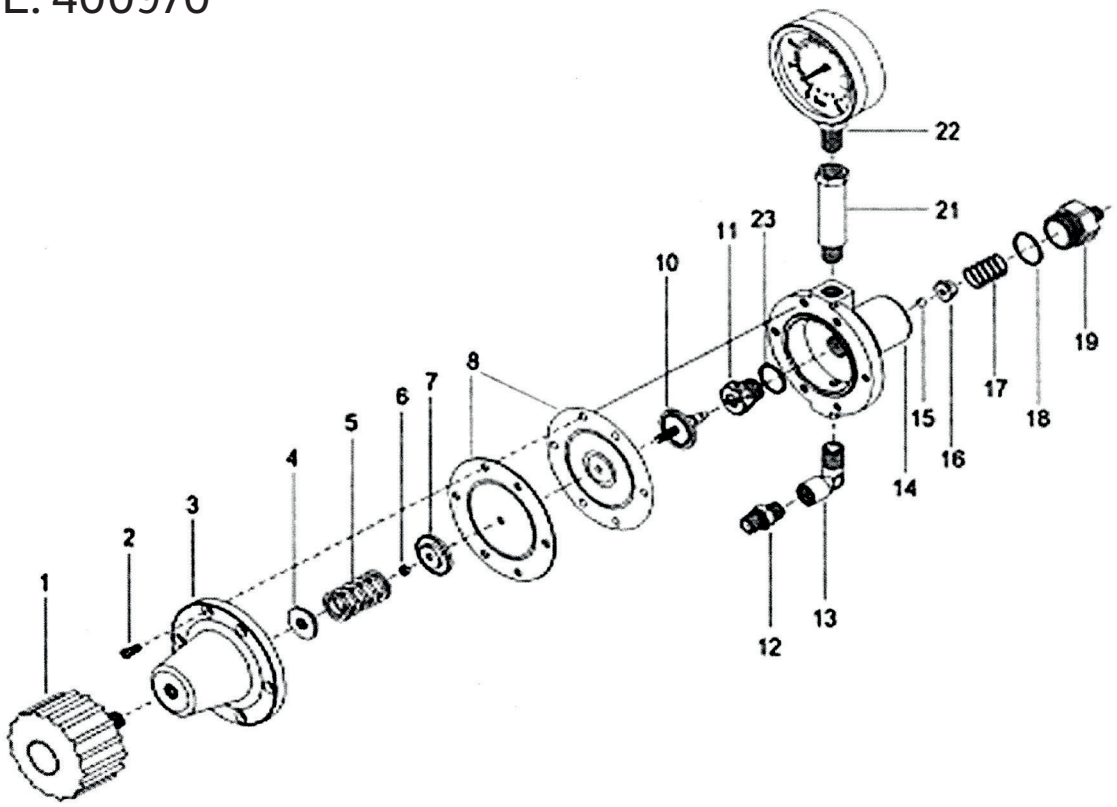

Code	pos.	Description
400851	1	Regulation knob
400852	2	Screw 4 x 12
400853	3	Regulation support and cover
400854	4	Spring pusher
400855	5	Spring regulation
400856	6	self-locking nut M5
400857	7	Back spring pusher
400858	8	Double membrane
400860	10	Shutter pin
400861	11	Shutter seat
46100	12	Nipple 1/4” x 1/4”
50400	13	L-fitting FM 1/4”
400864	14	Reducer body
490008	15	Stainless steel ball Ø 8 mm
400866	16	Ball pusher Ø 8 mm.
400867	17	Ball spring
400868	18	O-ring 3075
400869	19	Fluid inlet
21507	21	Pressure gauge extension fitting
M006D63R14R	22	Low pressure liquid pressure gauge 6 bar
400873	23	O-ring

LIQUID PRESSURE REDUCER 0-50 BAR

CODE: 400977

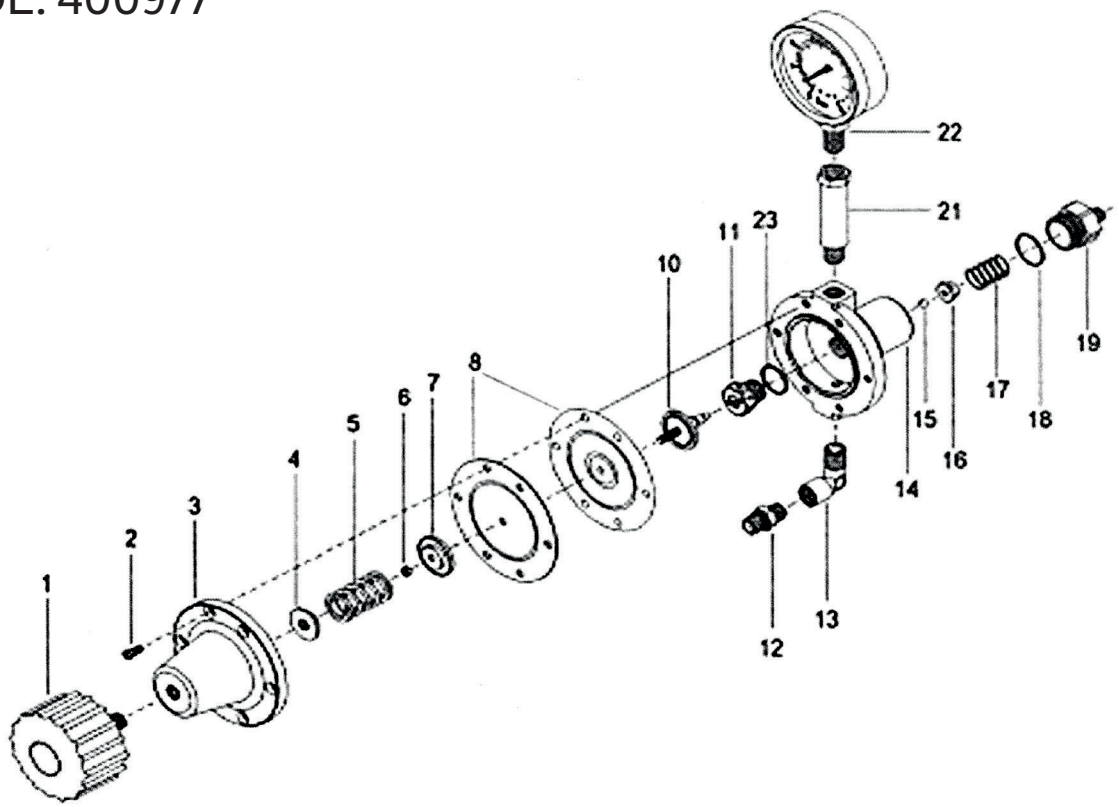

Code	pos.	Description
400851S	1	Regulation knob
400852	2	Screw 4 x 12
400853S	3	Regulation support and cover
400854S	4	Spring pusher
400855S	5	Spring regulation
400856	6	Self-locking nut M5
400857S	7	Back spring pusher
400858S	8	Double membrane
400860S	10	Shutter pin
400861S	11	Shutter seat
161414	12	Stainless steel nipple 1/4” x 1/4”
50400	13	L-fitting FM 1/4”
400864S	14	Reducer body
490008	15	Stainless steel ball Ø 8 mm
400866S	16	Ball pusher Ø 8 mm.
400867S	17	Ball spring
400868S	18	O-ring 3075
400869S	19	Fluid inlet
21507	21	Pressure gauge extension fitting
M060D65R14P	22	Liquid pressure gauge 0-60 bar
400873S	23	O-ring

LIQUID PRESSURE REDUCER 0-6 BAR RP

CODE: RPR500

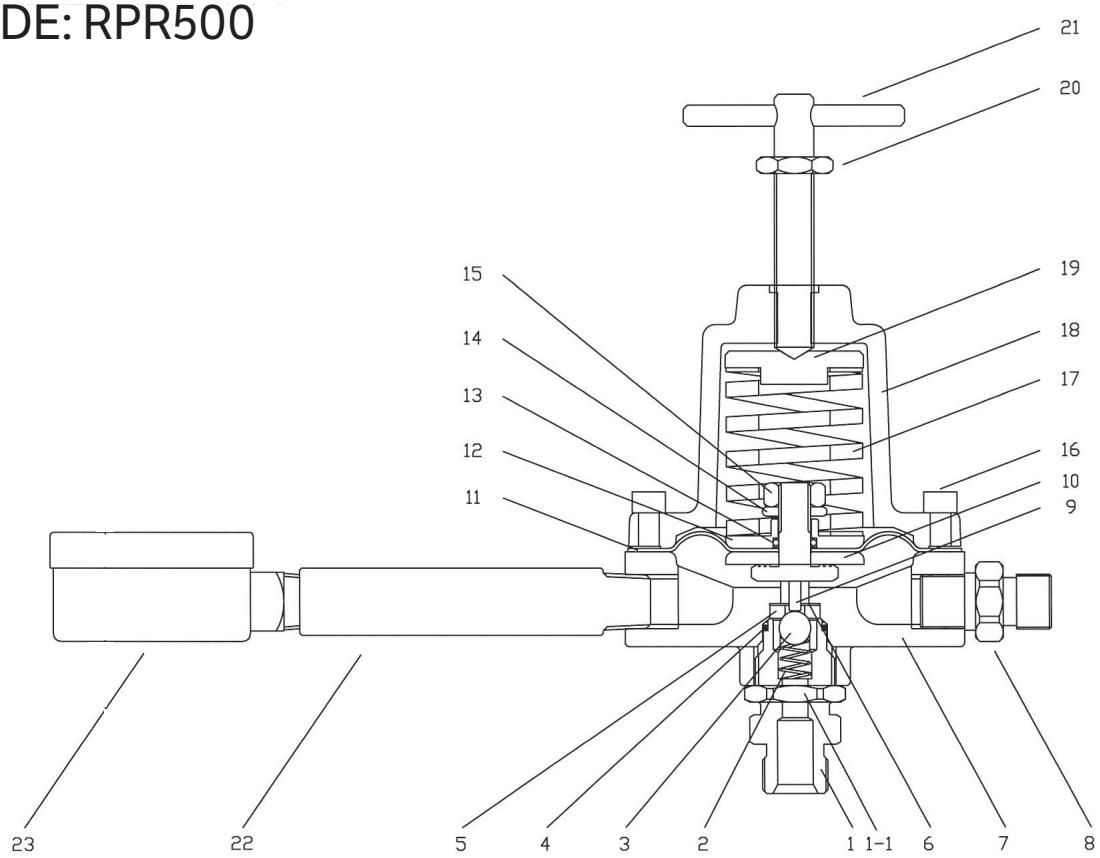

CODE	POS.	DESCRIPTION
RP5001	1	Fluid inlet 3/8”
RP5101	1-1	Nut
RP5002	2	Spring
490008	3	Stainless steel ball Ø 8 mm
RP5004	4	Gasket
RP5005	5	Ball seat
RP5006	6	Support gasket
RP5007	7	Reducer body
RP5008	8	Fluid outlet 1/4”
RP5009	9	Pin
RP5010	10	Seat
RP5011	11	Membrane
RP5012	12	Spring gasket
RP5013	13	O-ring
RP5014	14	Spring support
RP5015	15	Nut
RP5016	16	Hexagonal screw
RP5017	17	Spring
RP5018	18	Regulator cover
RP5019	19	Spring seat
RP5020	20	Nut
RP5021	21	Regulation knob
RP5022	22	Pressure gauge extension fitting
RP5023	23	Liquid pressure gauge 0-6 bar
RP5024	24	Gasket

PRESSURE REDUCER RPR-6S

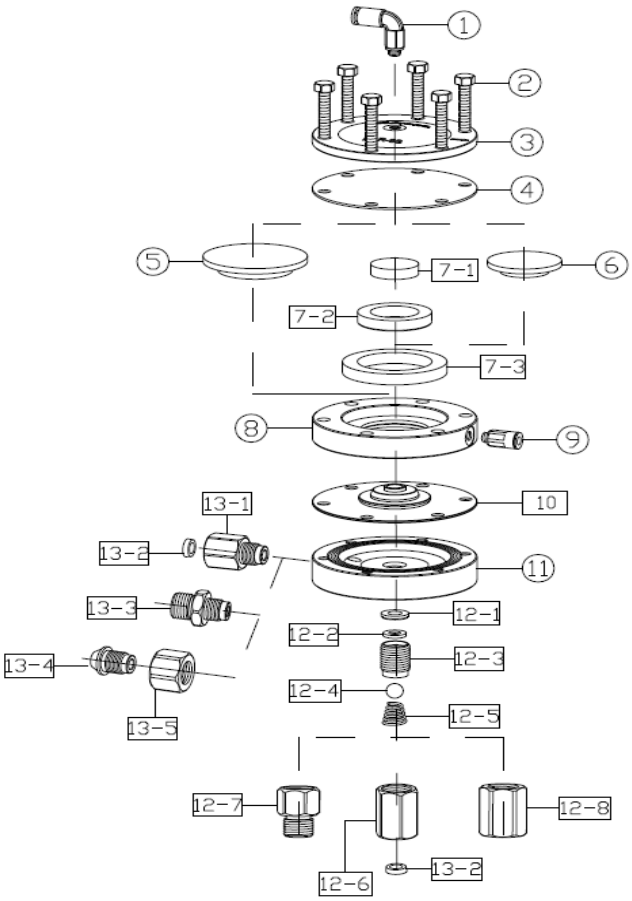

Code	Pos.	Description
RP6001	1	Air inlet ø6mm
RP6002	2	Hexagon screw
RP6003	3	Cover
RP6004	4	Air diaphragm
RP6005	5	Disc R1
RP6006	6	Disc R2
RP6071	7-1	Disc R4
RP6072	7-2	Washer R4
RP6073	7-3	Washer
RP6008	8	Regulator body
RP6009	9	Air inlet
RP6010	10	Fluid membrane
RP6011	11	Regulator base
RP6121	12-1	Copper washer
RP6122	12-2	Gasket
RP6123	12-3	Fluid connector A1
RP6124	12-4	Steel ball
RP6125	12-5	Spring
RP6126	12-6	Fluid inlet A2 F 1/4”
RP6127	12-7	Fluid inlet A2 M 1/4”
RP6128	12-8	Fluid inlet A2 F 3/8”
RP6131	13-1	Fluid outlet B F 1/4”
RP6132	13-2	Gasket
RP6133	13-3	Fluid outlet M 3/8”
RP6134	13-4	Fluid outlet F 3/8”
RP6135	13-5	Fluid outlet screw 3/8”

AGITATOR RB-FA

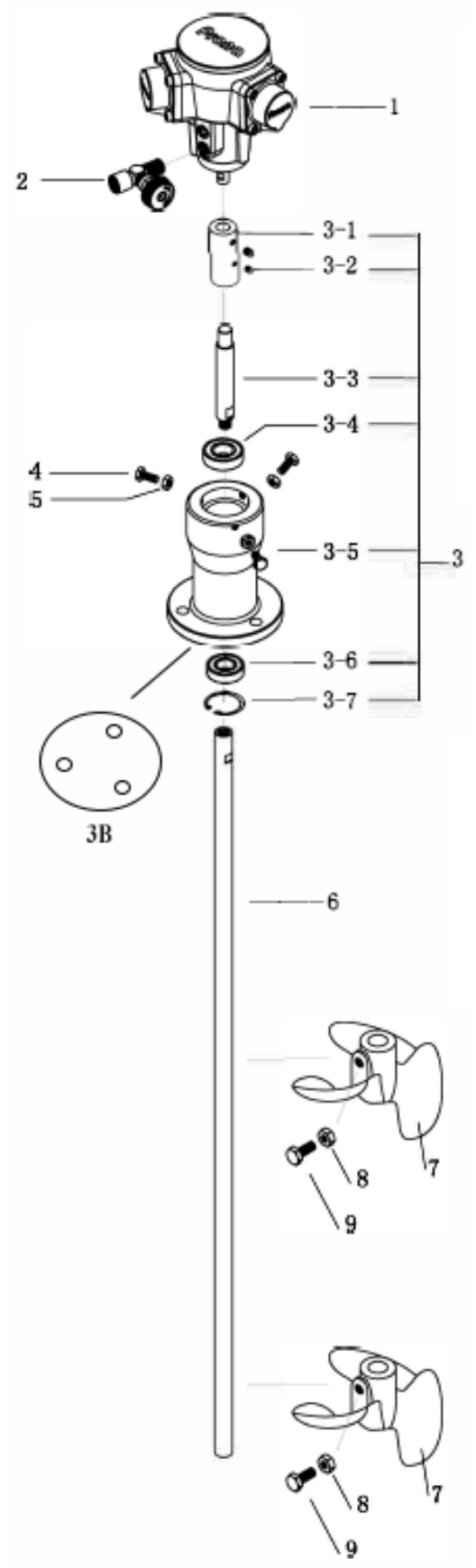

Code	Pos.	Description
RBFAR01	1	Air motor M30
RBFAR02	2	Air needle valve 1/4”
RBFAR03	3	Air motor support flange
RBFAR31	3-1	Motor connection
RBFAR32	3-2	Connector screw
RBFAR33	3-3	Motor rod
RBFAR34	3-4	Gasket 6202
RBFAR35	3-5	Motor seat
RBFAR36	3-6	Gasket 6002Z
RBFAR37	3-7	C-Ring
RBFAR3B	3B*	Rubber spacer
RBFAR04	4	Hexagon screw
RBFAR05	5	Hexagon screw
RBFAR06	6	Agitator rod
FA105I	7	Stainless steel propeller complete with locking screw ø 120 mm
FA107I	7	Stainless steel propeller complete with locking screw ø 165 mm
FA106N	7	Nylon propeller complete with locking screw ø100 mm
RBFAR08	8	Hexagon nut
RBFAR09	9	Screw esagonale

AGITATOR RB-40A

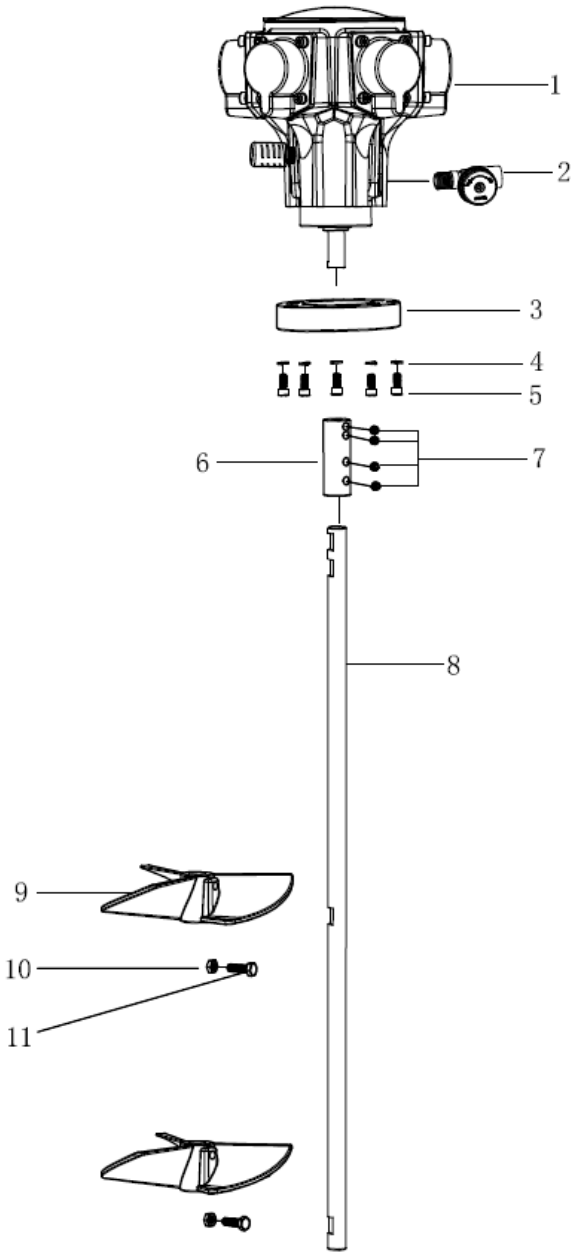

Code	pos.	Description
RB4001	1	Air motor M40
RBFAR02	2	Air needle valve 1/4”
RB4003	3	Flange
RB4004	4	WasherM5
RB4005	5	Screw M5x18
RB4006	6	Motor connector
RB4007	7	Locking screw
RB4008	8	Agitator rod
FA105I	9	Stainless steel propeller complete with locking screw ø 120 mm
FA107I	9	Stainless steel propeller complete with locking screw ø 165 mm
FA106N	9	Nylon propeller complete with locking screw ø100 mm
RBFAR08	10	Hexagon nut
RBFAR09	11	Hexagon screw

ORBITAL SANDER RP-51

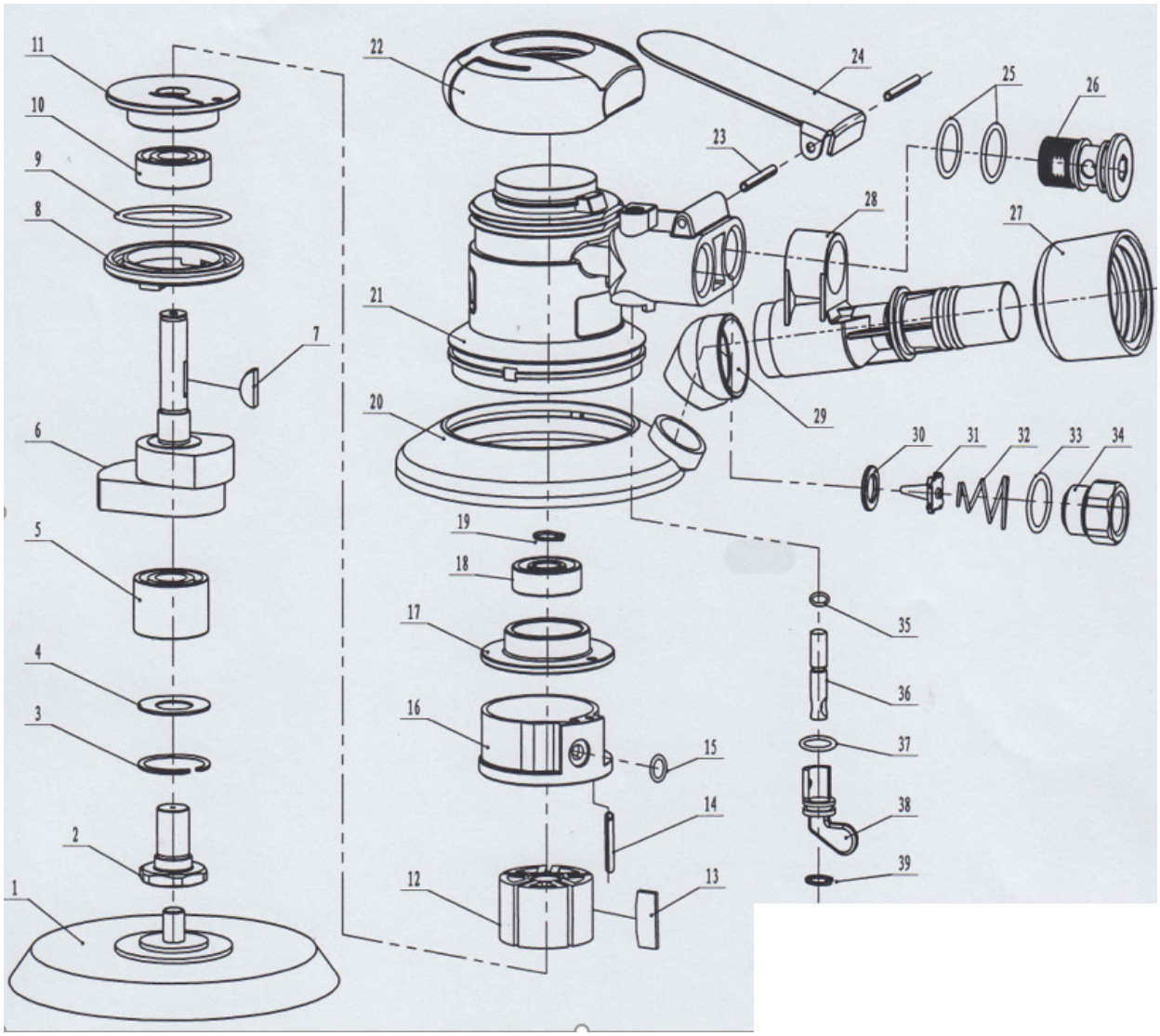

Code	pos.	Description
R51R125	1	Sanding pad ø125mm
R51R150	1	Sanding pad ø150mm
R51R02	2	Main shaft
R51R03	3	C-ring
R51R04	4	Washer
R51R05	5	Bearing
R51R06	6	Drive shaft
R51R07	7	Woodruff key
R51R08	8	Lock ring
R51R09	9	O-ring
R51R10	10	Bearing
R51R11	11	Front cover
R51R12	12	Rotor
R51R13	13	Rotor blade
R51R14	14	Pin 3*28
R51R15	15	O-ring
R51R16	16	Cylinder
R51R17	17	Back cover
R51R18	18	Bearing
R51R19	19	Locking ring

Code	pos.	Description
R51R20	20	Protective shield
R51R22	22	Housing
R51R23	23	Pin 3*20
R51R24	24	Trigger
R51R25	25	O-ring
R51R26	26	Vacuuming joint
R51R27	27	Locked pipe
R51R28	28	Vacuuming straight pipe
R51R29	29	Bend pipe
R51R30	30	Gasket
R51R31	31	Pin
R51R32	32	Spring
R51R33	33	O-ring
R51R34	34	Air inlet connection
R51R35	35	O-ring
R51R36	36	Switch pole
R51R37	37	O-ring
R51R38	38	Air regulator
R51R39	39	Locking ring

PUMPS EXPLODED VIEW

AIR MOTOR 45:1 / 63:1 440
AIR MOTOR 56:1 / 73:1 447
AIR MOTOR 68:1 444
AIR MOTOR EXCHANGE VTN/S 435
AIR MOTOR VTN/S 436
AIR MOTOR WIN 281 - PRO 301 FE 438
AT 2EPR - AT2ESS - AT2ASS 473
AT5ESS - AT5ASS 474
AT10EPR - AT10APR 475
AT 10 ESPR - ASPR 479
AT10MPR 476
AT 20/40/60 EPR - APR - MPR 477
AT 20/40/60 GPR 478
AT 20/40 ESPR - ASPR 480
ECO 401 P / TS / TSR 429
ENERGY 21 423
GRACO XTREME COMPATIBLE PUMPING AND KIT 274
HSS 8900 421
HSS 9000 - HSS 11000 484
HSS 9950 412
JAFE 10 - 30 485
LINE 6500 424-425
LINE 8500 426-427
LP 400 - LP 500 481
LP 600 - LP 700 482
LP 955 409
LUNG PMX 8/30 449
LUNG PMX 18/30 450
MP 455 / LP 555 / LP 655 408
OTS ELECTROSTATIC GUN 453-454
POMPA PMX 8/30 A SOFFIETTO 451
POMPA PMX 18/30 A SOFFIETTO 452
PUMP 45:1 / 63:1 STEEL 441
PUMP 45:1 S. STEEL 442
PUMP 56:1 / 73:1 STEEL 448
PUMP 63:1 S. STEEL 443
PUMP 68:1 445
PUMP 68:1 STAINLESS STEEL 446
PUMPING 5:1 FE 437
PUMPING 28:1 439
PUMPING AND KIT VALSPRAY 274
S-ECO 25 433
SL 800 - SL 1100 483
SL 1250 410
TS 1750 411
TURBINE HOLLOBLAST 472
TURBINE TUBOBLAST 469-471
ULTRAMAX HH 422
VAPA15U - VS 36 456
VAPA20U - VS 50 457
VAPA31U 459
VAPA40U 460
VAPA50U 461
VAPP20 458
VS 2B 464
VS 10.000 407
VS 13 - 27 403-404
VS 24 - OUT OF PRODUCTION 468
VS 25 462
VS 25 STEEL 463
VS 28 3:1 465
VS 36i - OUT OF PRODUCTION 466
VS 410 - VS 410 HI 413-414
VS 610 - VS 610 HI 415-416
VS 1110 417-418
VS 1510 419-420
VS 4500 405
VS 6000 406
VS K1 467
VTN 321 431
VTN 401 430
VTN/S ACCESSORIES 434
VTP 010 / VTS 201 428
VTS 301 432

VS 13 - 27

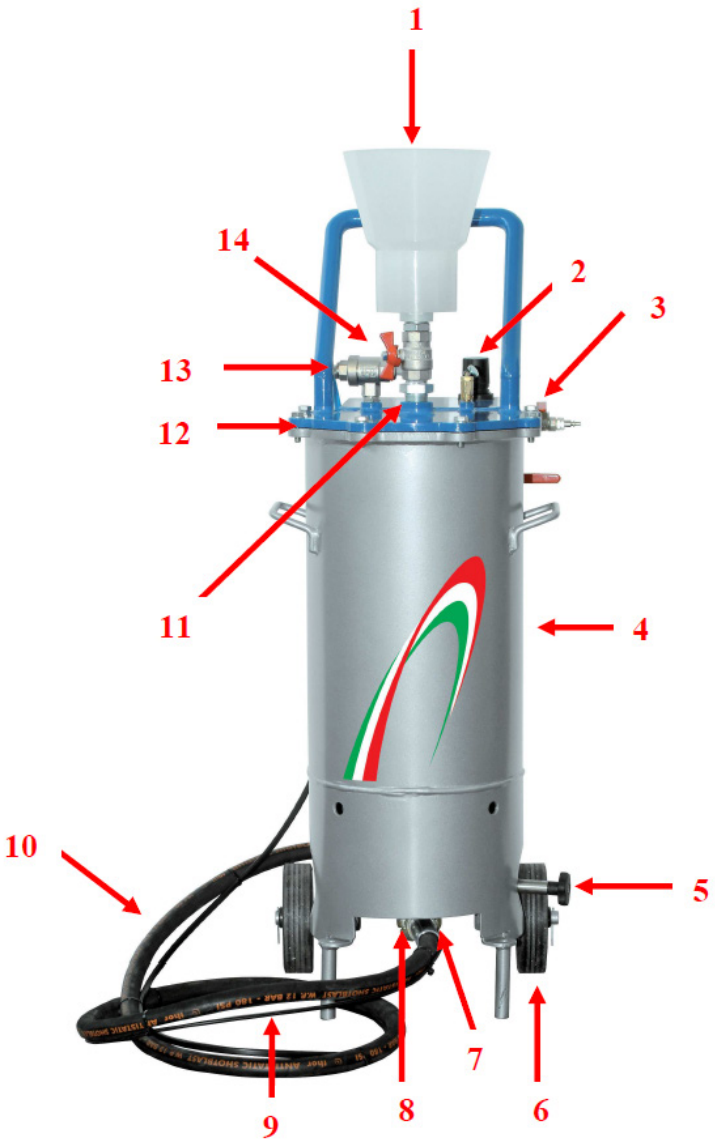

Code	pos.	Description
520002LL	1	Abrasive load tank 3 lt
MIN14	2	Air regulation set complete
MIN15	3	Tank cover
MIN16	4	Sanblaster body
MIN17	5	Abrasive regulation set
212472	6	Wheel
410105	7	Nozzle holder threaded M 1” for hose øe 25
400024	8	Express fitting F 1”
884242	9	Express fitting F 1”
360025	10	Rubber abrasive hose ø 13x25 per meter
151010	11	Nipple HA 1” x 1” for loading valve
MIN24	12	Cover o-ring
MIN25	13	Three-way pneumatic valve 1/2”
MIN26	14	Loading valve with lever FF 1”
MIN03	15	5-way air exchange valve

MIN41	Complete abrasive hose 7.5m (hose holder, express, twin command)
MIN42	Complete abrasive hose 10m (hose holder, express, twin command)
MIN43	Complete abrasive hose 15m (hose holder, express, twin command)

VS 13 - 27

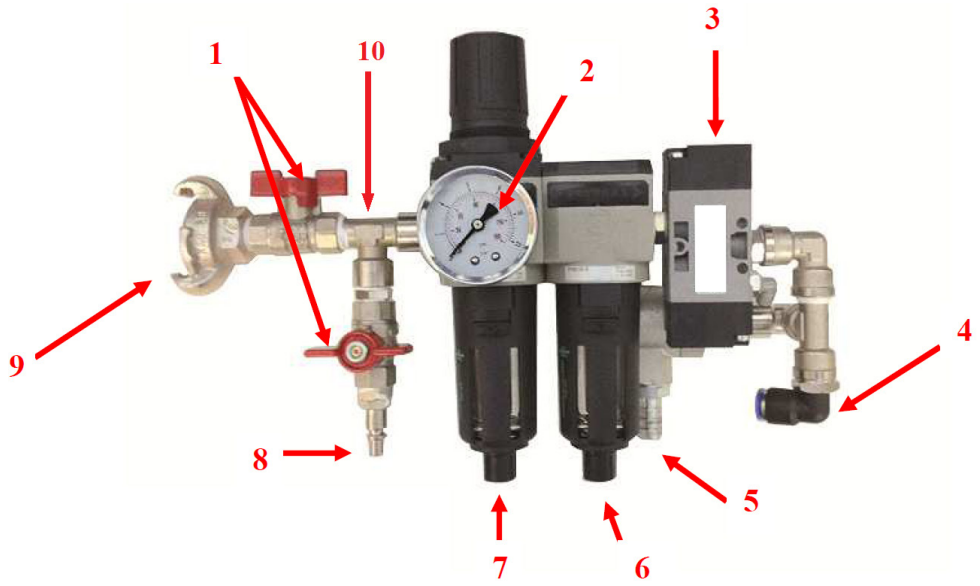

Code	pos.	Description
383338	1	Ball valve with butterfly knob low pressure FF 1/4”
212484	2	Air pressure gauge 0-12 bar with back fitting 1/8”
MIN03	3	5-way air exchange valve
119138	4	Automatic fitting for hose 8x10 M 3/8” 90°
MIN05	5	Hose connector M1/2” for hose ø13
MIN06	6	Air filter separator
MIN07	7	Air filter regulator
40070	8	Quick connectionM 1/4”
400016	9	Express fitting M 3/8”

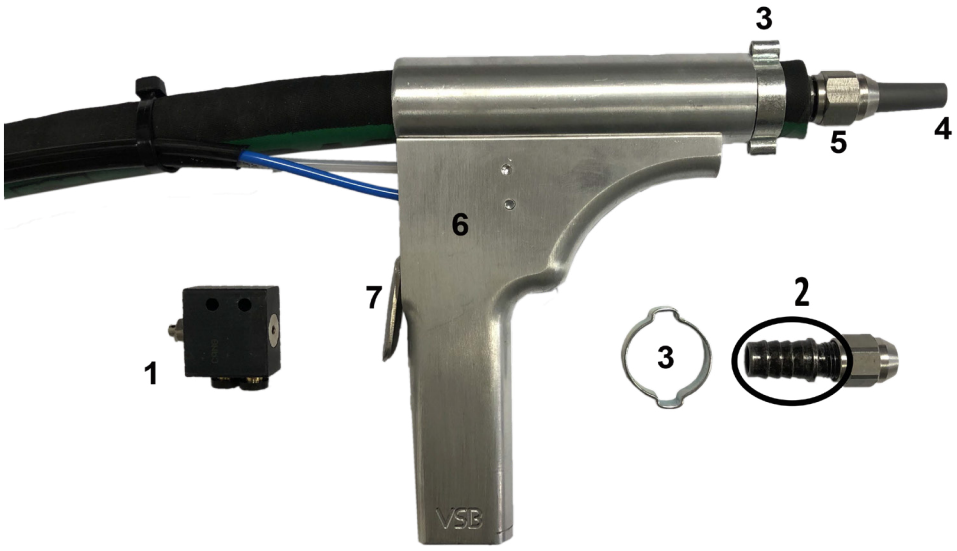

Complete gun with nozzle for mini sandblasters VS 13 / 27
Code: PIVS13
Price: **€ 375,00**

Gun without nozzle for mini sandblasters VS 13 / 27
Code: PIVS27
Price: **€ 285,00**

Code	pos.	Description
3615	1	Microflow pin valve
MIN37	2	Cemented nozzle holder
MIN29	3	Hose clamp
520244	4	Cylindrical nozzle ø 3.5 mm (See p. 122 for all sizes)
MIN31	5	Nozzle locking ring
MIN32	6	Gun body complete with hose guard
MIN33	7	Trigger

VS 4500

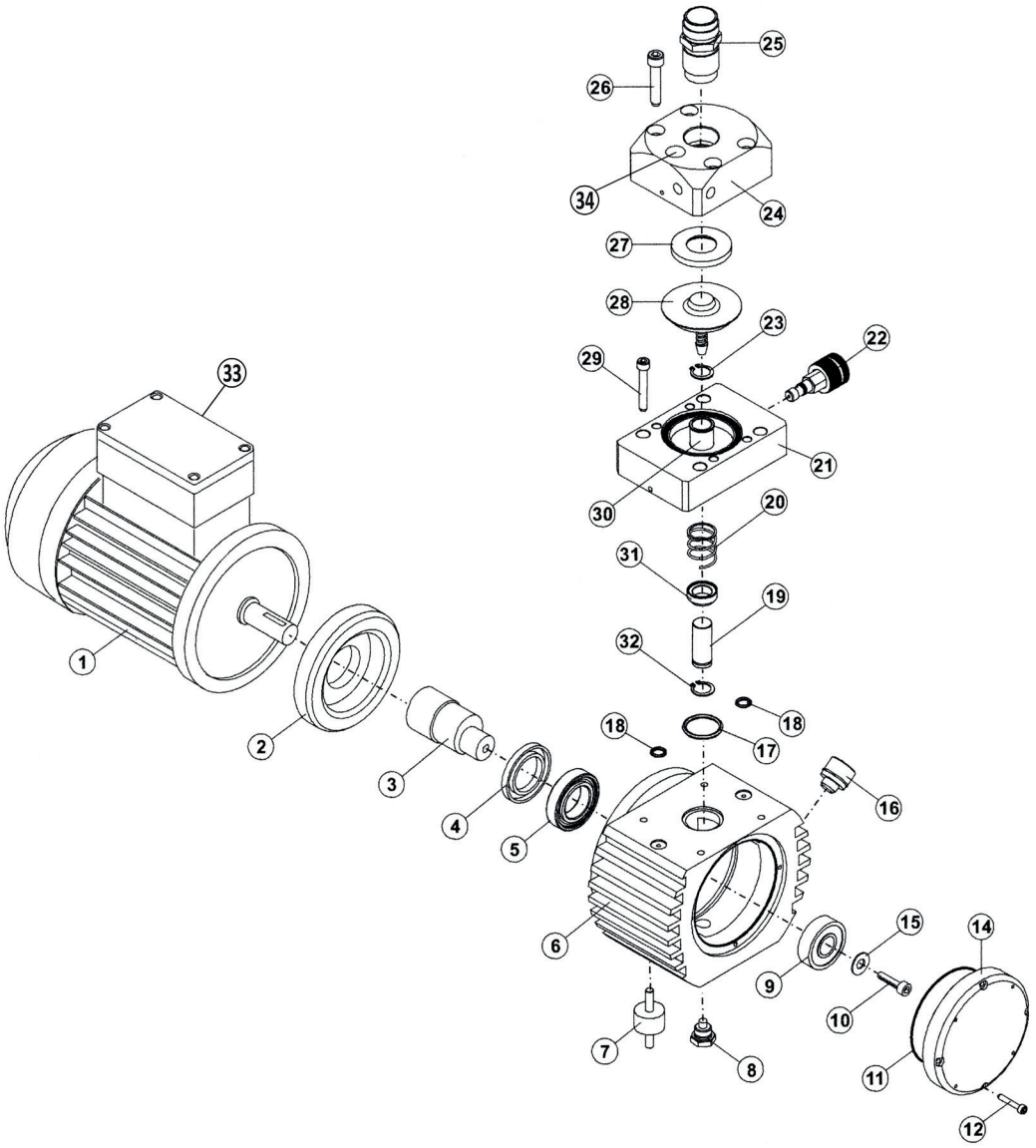

pos.	Code	Description
1	4501	Motor
2	4502	Support
3	4503	Shaft
4	4504	Oil seal
5	4505	Bearing
6	4506	Pump body
7	10007	Vibration damp
8	10008	Cap
9	4509	Bearing
10	VTBR830	Screw
11	4511	O-ring
12	VTBR630	Screw
14	4514	Cover
15	RD8	Washer
16	10018	Oil tap
17	4517	O-ring
18	4518	O-ring
19	4519	Piston

pos.	Code	Description
20	4520	Spring
21	4521	Flange
22	400005	Pressure regulating valve
23	4523	Seger
24	4524	Head
25	400080	Suction valve
26	VTBR1050	Nut
27	050353	Spacer
28	040300	Membrane
29	VTBR1040	Nut
30	4530	Sleeve
31	4531	Spring guide
32	4532	Seger
33	10033	Electric box
34	400004	Compression valve
	4534	Motor protection
	4535	Capacitor

VS 6000

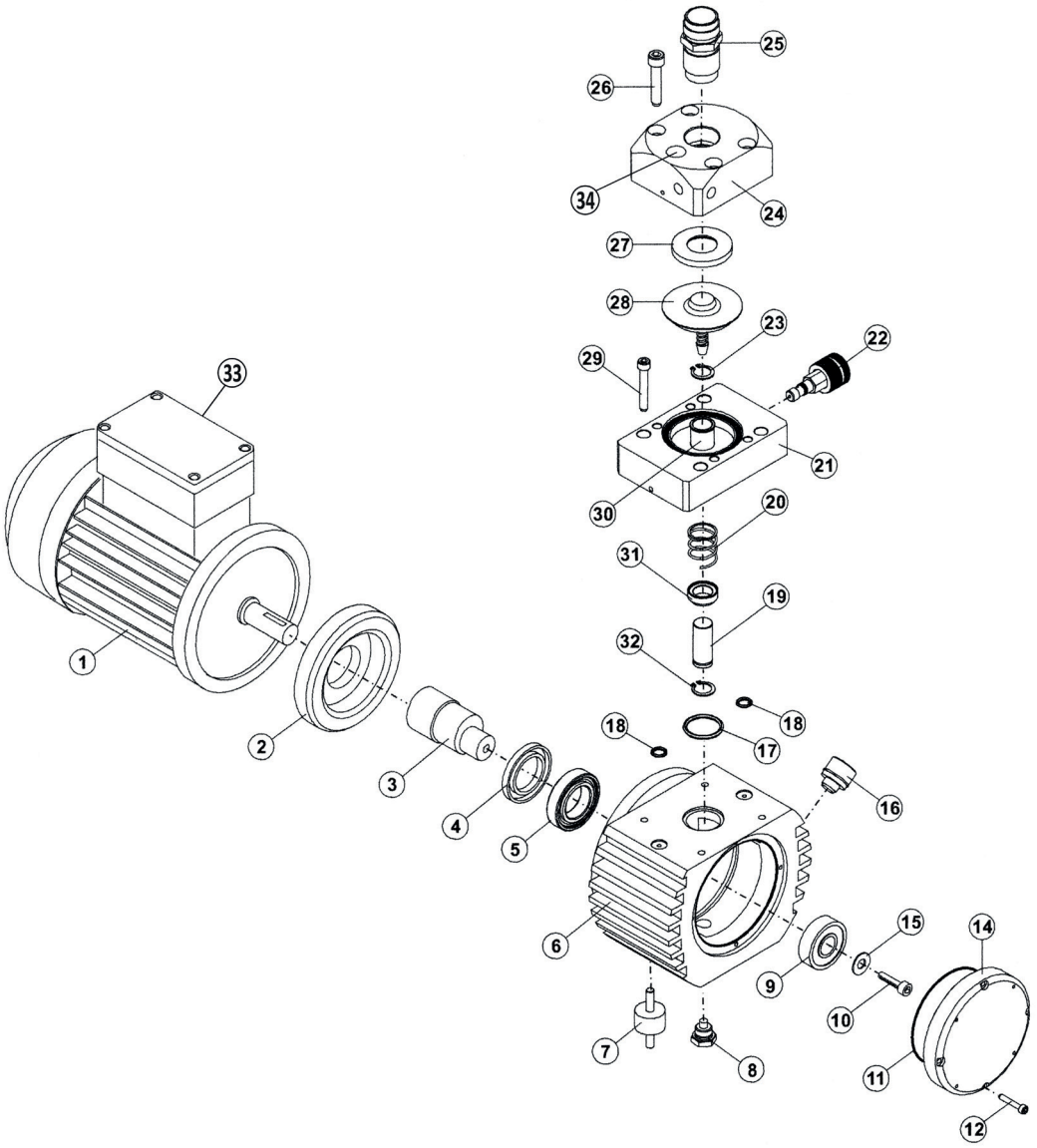

pos.	Code	Description
1	4501-1	Motor
2	4502	Support
3	4503	Shaft
4	4504	Oil seal
5	4505	Bearing
6	4506	Pump body
7	10007	Vibration damp
8	10008	Cap
9	4509	Bearing
10	VTBR830	Screw
11	4511	O-ring
12	VTBR630	Screw
14	4514	Cover
15	RD8	Washer
16	10018	Oil cap
17	4517	O-ring
18	4518	O-ring
19	4519	Piston

pos.	Code	Description
20	4520	Spring
21	4521	Flange
22	400005	Pressure regulating valve
23	4523	Seeger
24	4524	Head
25	400080	Suction valve
26	VTBR1050	Nut
27	050353	Spacer
28	040300	Membrane
29	VTBR1040	Nut
30	4530	Sleeve
31	4531	Spring guide
32	4532	Seeger
33	10033	Electric box
34	400004	Compression valve
	4534	Motor protection
	4535	Capacitor

VS 10.000

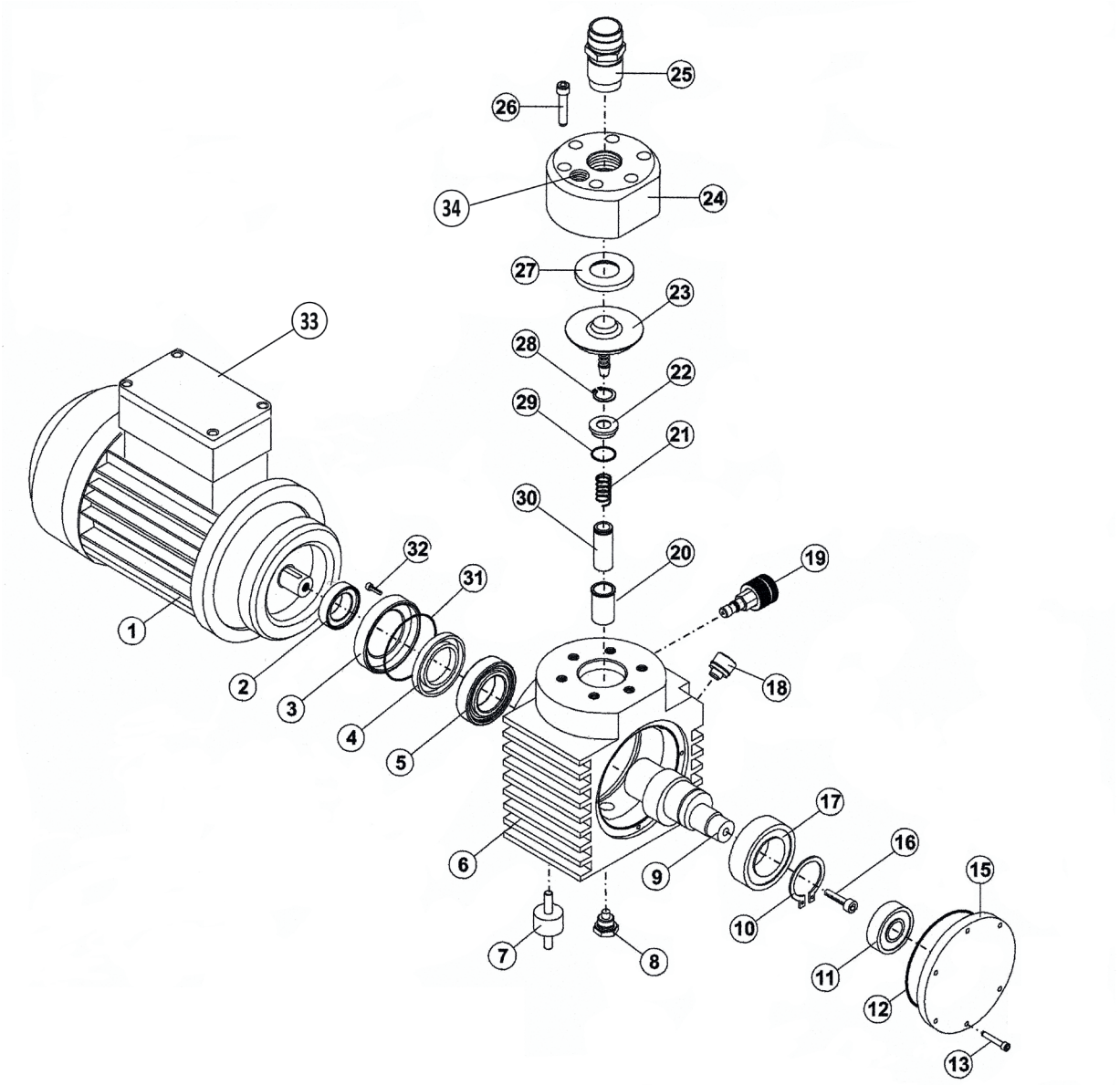

POS.	CODE	DESCRIPTION
1	10001	Motor
2	10002	Bushing
3	10003	Oil seal flange
4	10004	Oil seal
5	10005	Bearing
6	10006	Hydraulic body
7	10007	Vibration damp
8	10008	Cap
9	10009	Shaft
10	10010	Seeger
11	10011	Bearing
12	10012	O-ring
13	VTBR620	Nut
15	10015	Flange
16	VTBR880	Screw
17	10017	Bearing
18	10018	Oil cap
19	400005	Press.reg.valve

POS.	CODE	DESCRIPTION
20	10020	Sleeve
21	10021	Spring
22	10022	Spring guide
23	041000	Membrane
24	10024S	Vertical head
25	400080	Suction valve
26	VTBR1050	Nut
27	050017	Spacer
28	10028	Seeger
29	10029	O-ring
30	10030	Piston
31	10031	O-ring
32	VTBR520	Screw
33	10033	Electric box
34	400004	Compression valve
	10034	Motor protection
	10035	Capacitor

MP 455 / LP 555 / LP 655

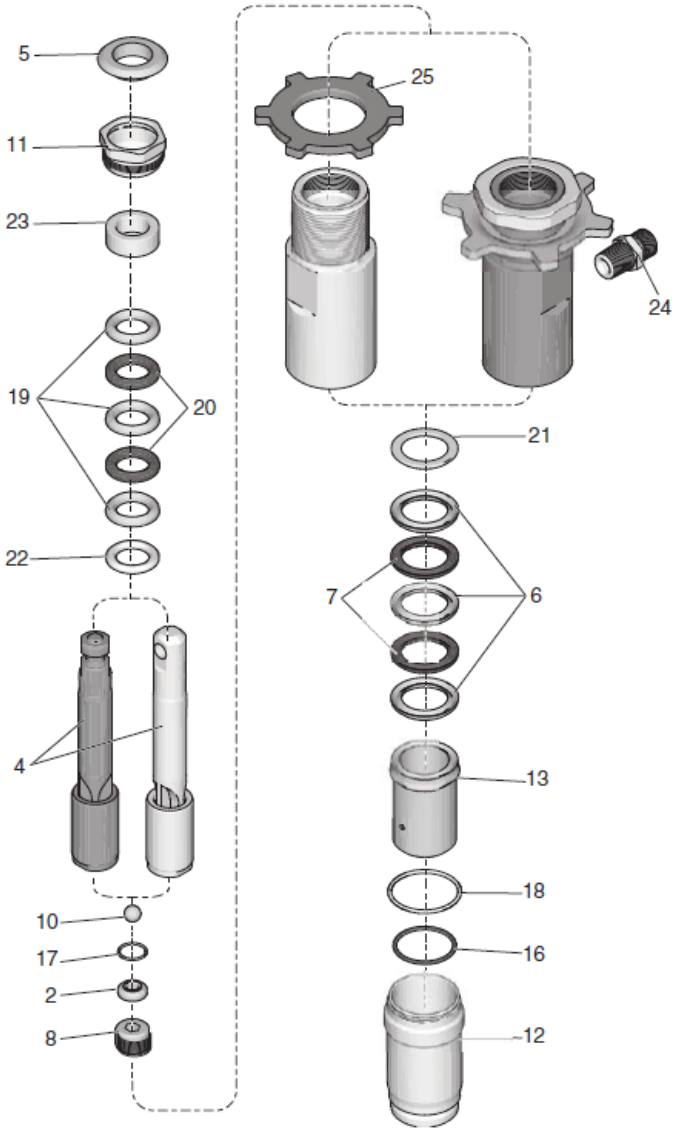

Code	pos.	Description
G17J183	2	Seat top piston
-	4	Piston (included in the set)
G180656	5*	Plug
G17J184	6*	V-Packing
G17J185	7*	Leather V-Packing
G17J179	8	Plug
G105444	10*	Ball
G17J181	11	Nut
G17N465	12	Valve
G17P097	13*	Seat kit (includes 16 and 18)
G108730	16*	O-ring
G17J187	17*	O-ring piston
G17S053	18*	O-ring PTFE
G125724	19*	V-Packing
G176755	20*	V-packing leather
G17J188	21*	Gland male, piston, lower
G176754	22*	Gland male, throat, upper
G176757	23*	Gland female, throat
G162453	24	Connector 1/4 NPSM X 1/4 NPT
G195150	25	Flange
G17P094	-	Pump repair kit MP e LP (includes pos. 5-6-7-10-13-16-17-18-19-20-21-22-23)
G17P096	-	Piston repair kit serie MP e LP (include pos. 2-4-10-17)

Code	Description
20-2806	Drain valve (Cover not included)
14-3064	Suction filter 3/4” 16 UNF
14-267X	Manifold filter short for models LP 555 - 655
16X295	Control board MP 455
246380	Control board LP 555
24X751	Control board LP 655
243222	Transducer LP 555 / 655

LP 955

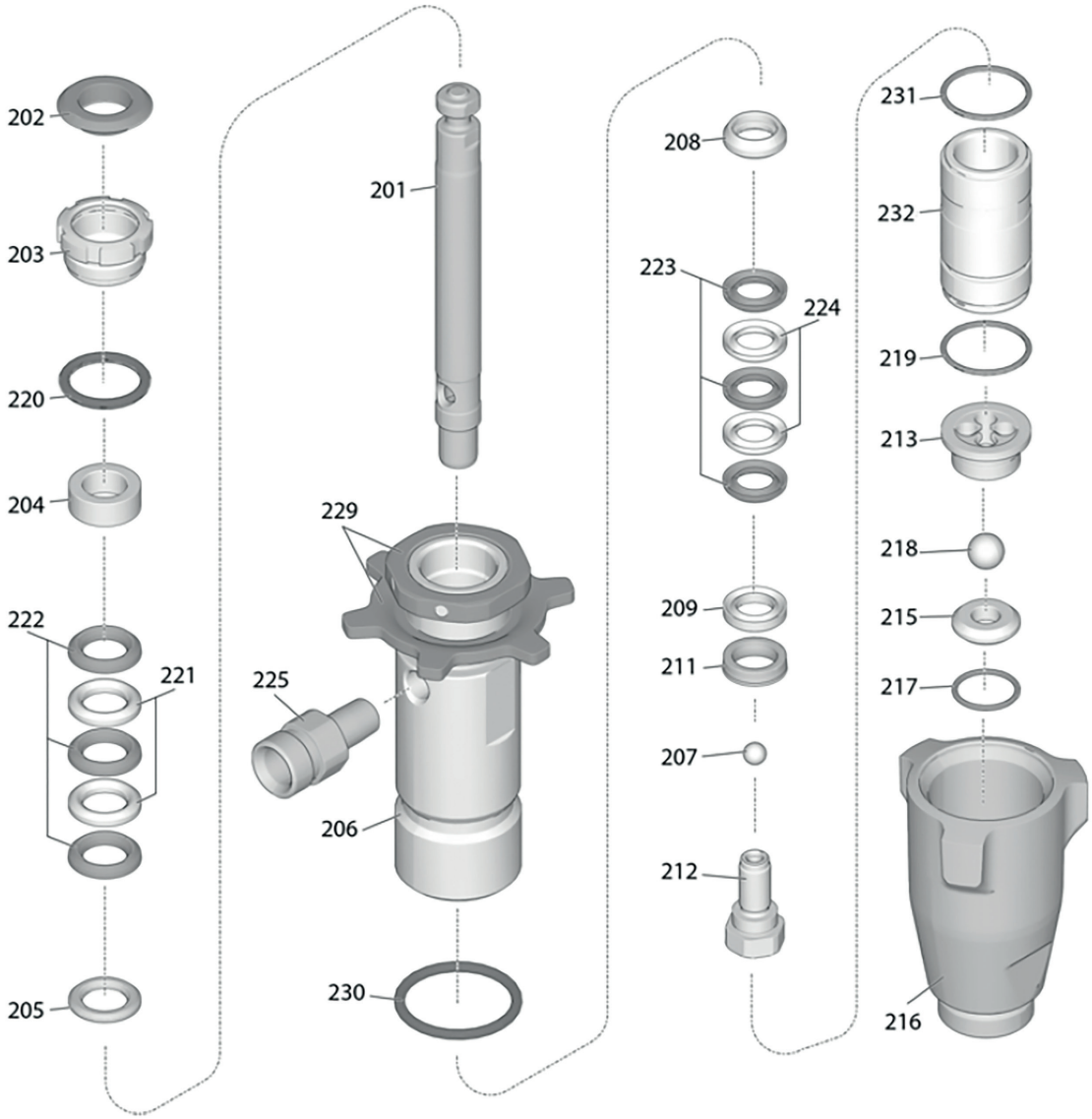

Code	pos.	Description
19Y268	201	Piston (included pos. 212)
G180656	202*	Plug
193047	203	Packing nut
G176757	204*	Gland Female
G176754	205*	Gland Male
19Y267	206	Cylinder
G105444	207*	Ball
195129	208*	Piston guide M
180073	209*	Piston guide F
15G234	211*	Piston guide
239937	212	Valve piston
G192624	213	Ball guide
G239922	215	Repair kit (pos. 213-217-218)
G15C785	216	Valve intake (foot)
G107079	217*	O-ring
G105445	218*	Ball
17V093	219*	O-ring
160516	220*	O-ring
G176755	221*	Leather V-Gasket
192710	222*	V-Gasket
176749	223*	Leather V-Gasket

Code	pos.	Description
192712	224*	V-gasket
G162453	229	Connector 1/4 NPSM X 1/4 NPT
G156593	230	O-ring
G108526	231	O-ring
19Y269	232	Cilinder

18B260	*	Pump repair kit (includes pos. 202-204-205-207-208-209-211-217-218-219-220-221-222-223-224)

Code	Description
20-2806	Bleed Valve (exluded knob)
14-2179	Suction filter 1” NTP 8 Mesh
14-268X	Manifold filter medium
15B071	Manifold filter support
19Y382	Kit control LP 955
243222	Trasducer

SL 1250

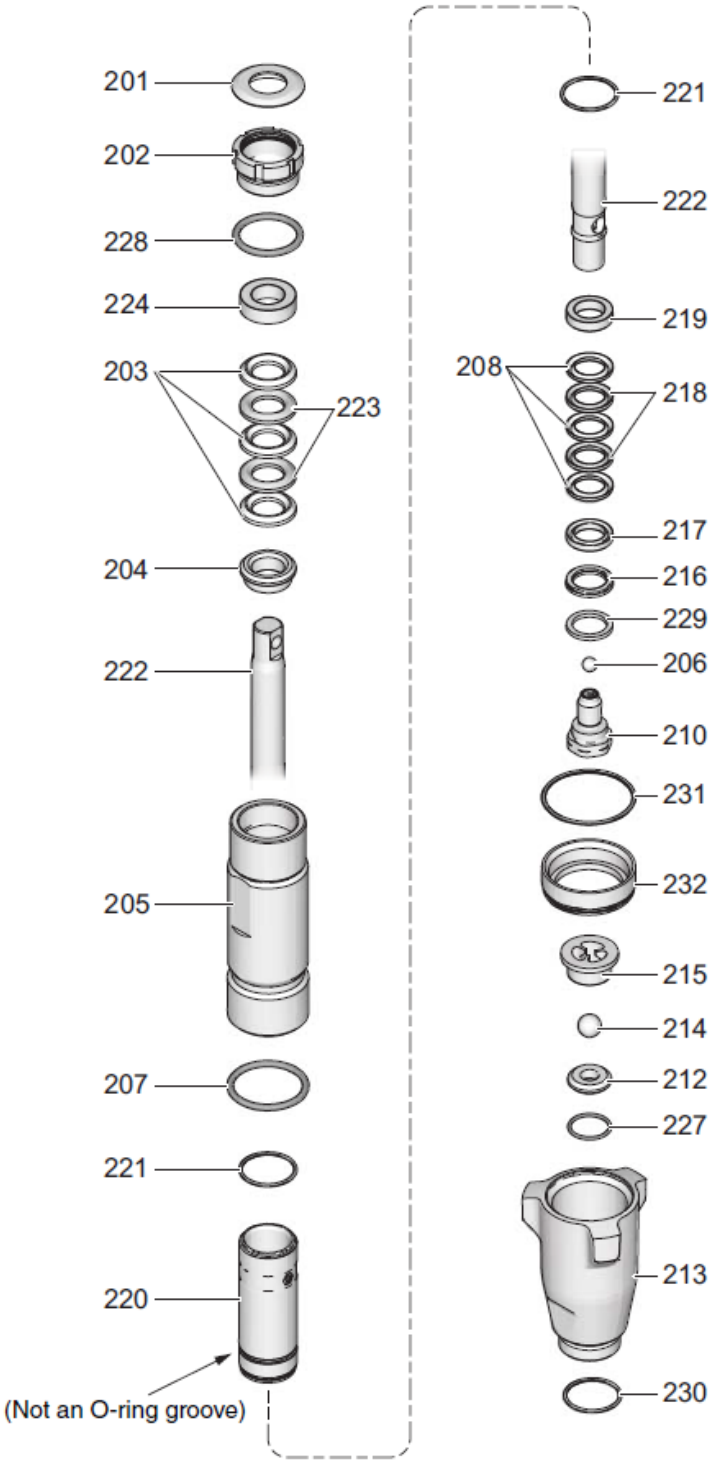

Code	pos.	Description
G179810	201*	Seat top piston
G193046	202	Plug
G192692	203*	V-Packing
G15C987	204*	Guide
G17A030	205	Cylinder
G105444	206	Ball
G156593	207*	Seal
G192693	208*	V-packing
G287877	210	Piston valve
G239922	212	Seat Kit (includes 214-215-227)
G15C785	213	Intake valve
G105445	214	Ball
G192624	215	Ball cage
G118503	216*	Sealing ring
G178969	217*	Piston gland F
G178939	218*	V-Packing
G196880	219*	Piston gland M
G248209	220	Sleeve
G108526	221*	O-ring PTFE
G248206	222	Piston rod
G178940	223*	V-packing
G15C988	224*	Gland
G107079	227	O-ring PTFE
G158776	228*	O-ring
G15C997	229*	Washer
G118494	230*	O-ring fluoroelastomer
G248212	*	Pump Repair kit SL 1250 (includes pos. 201-203-204-207-208-216-217-218-219-221-223-224-228-229-230)

Code	Description
20-2324	Drain valve (cover not included)
14-2179	Suction filter 1” NTP 8 Mesh
14-269X	Manifold filter short
15B071	Manifold filter base
24P848	Control board SL1250
243222	Transducer

TS 1750

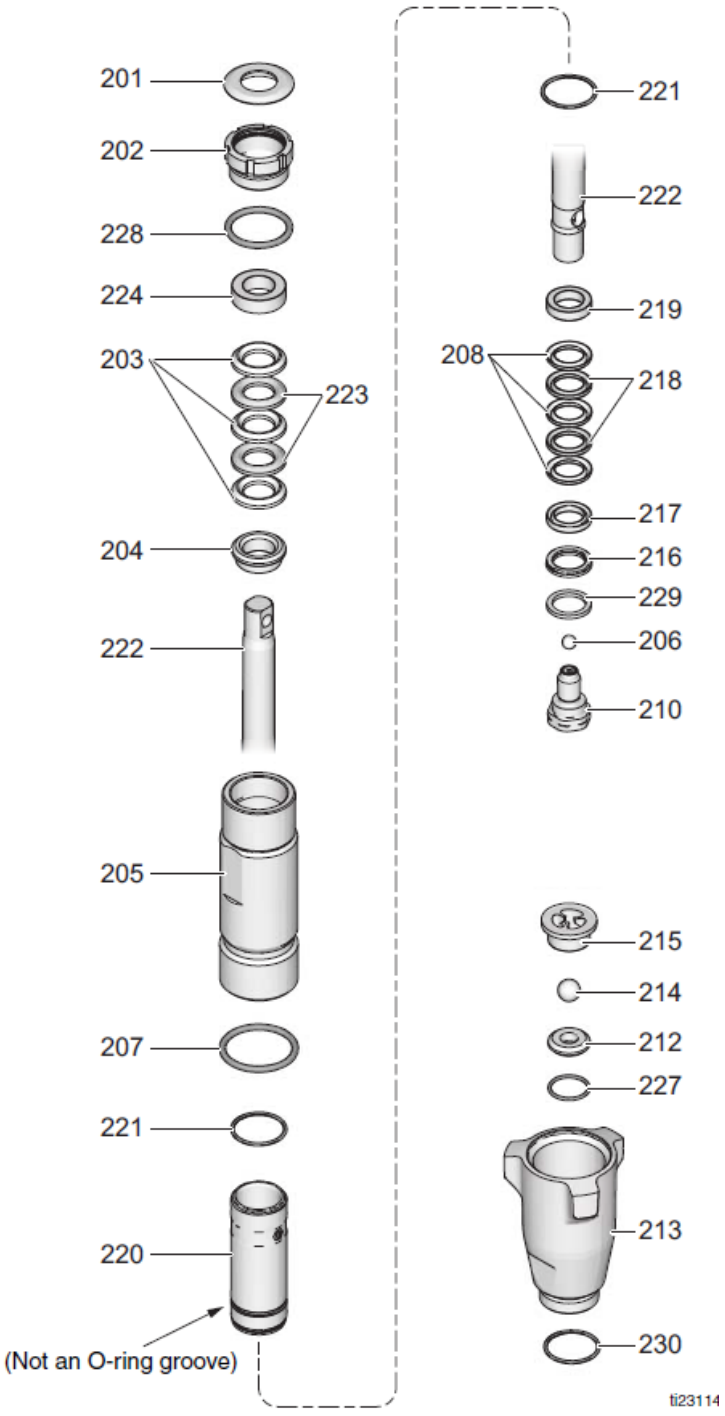

Code	pos.	Description
G1873171	201*	Seat top piston
G193032	202	Plug
G193124	203*	V-Packing
G15C989	204*	Piston guide
G196754	205	Cylinder
G116327	206	Ball
G156633	207*	Gasket
G193125	208*	V-Packing
G240150	210	Piston valve
G244571	212	Seat kit (includes 214-215-227)
G196753	213	Intake valve (foot)
G111453	214	Ball
G196967	215	Ball cage
G118504	216*	Wiper, piston
G183185	217*	Piston gland M
G15E329	218*	V-Packing
G183178	219*	Gland packing M
G248210	220	Sleeve
G107098	221*	O-ring PTFE
G249028	222	Piston rod
G183175	223*	V-Packing
G15C990	224*	Gland female throat
G108526	227	O-ring PTFE
G20C987	228*	O-ring
G15C998	229*	Washer backup
G117608	231	Nipple
G162485	232	O-ring fluoroelastomer
G249189	*	Pump repair kit SL 1250 (includes pos. 201-203-204-207-208-216-217-218-219-221-223-224-228-229-230)
G248213	*	Pump repair kit TS 1750 SS spheres (includes pos. 201-203-204-207-208-216-217-218-219-221-223-224-228-229)

Code	Description
29-3160	Drain valve (Cover not included)
14-2179	Suction filter 1” NTP 8 Mesh
14-269X	Manifold filter short
15C766	Manifold filter base
24P848	Control board TS 1750
243222	Transducer

HSS 9950

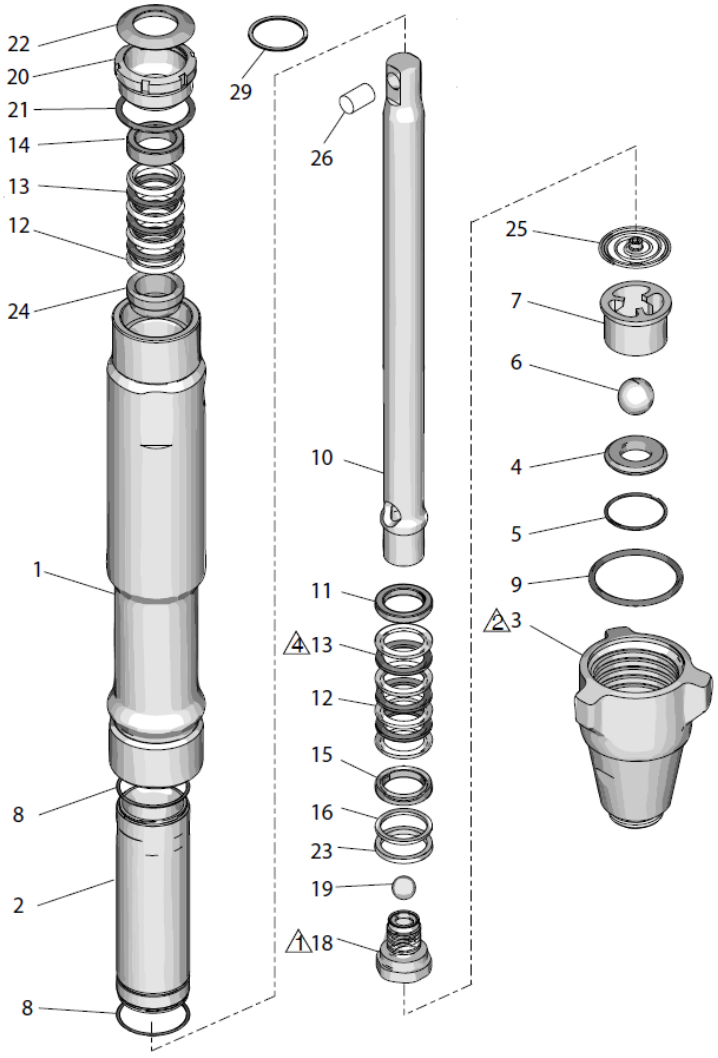

Code	pos.	Description
G17D124	1	Cylinder
D248980	2	Gun head
D15A303	3	Intake valve
G15J038	4	Ball seat
G107098	5	O-ring
G118602	6	Ball
G193391	7	Ball cage
G108822	8	O-ring PTFE
G160325	9	O-ring
G17D121	10	Piston rod
G189585	11	Piston gland M
G198701	12	V-Packing
G198718	13	V-Packing
G15G657	14	Gland packing F
G198765	15	Gasket F
G119636	16	Washer
G287388	18	Piston valve
G118601	19	Ball
G15J792	20	Nut
G157195	21	O-ring
G112590	22	Seat top piston
G15F183	23	Washer
G15G658	24	Gland packing M
G24E027	25	Spring
G197443	26	Wedge
G116551	29	Ring
G24N012	-	Repair air kit Pump HSS 9950 (includes pos. 5-6-8-9-11-12-13-14-15-16-19-21-22-23-24)
G246173	-	Oil filter HSS9950 compatible with titan speflo 6900

Code	Description
287879	Drain valve (Cover not included)
865719	Complete drain valve
14-2179	Suction filter 1” NTP 8 Mesh
14-269X	Manifold filter long
15C766	Manifold filter base

VS 410 - VS 410 HI

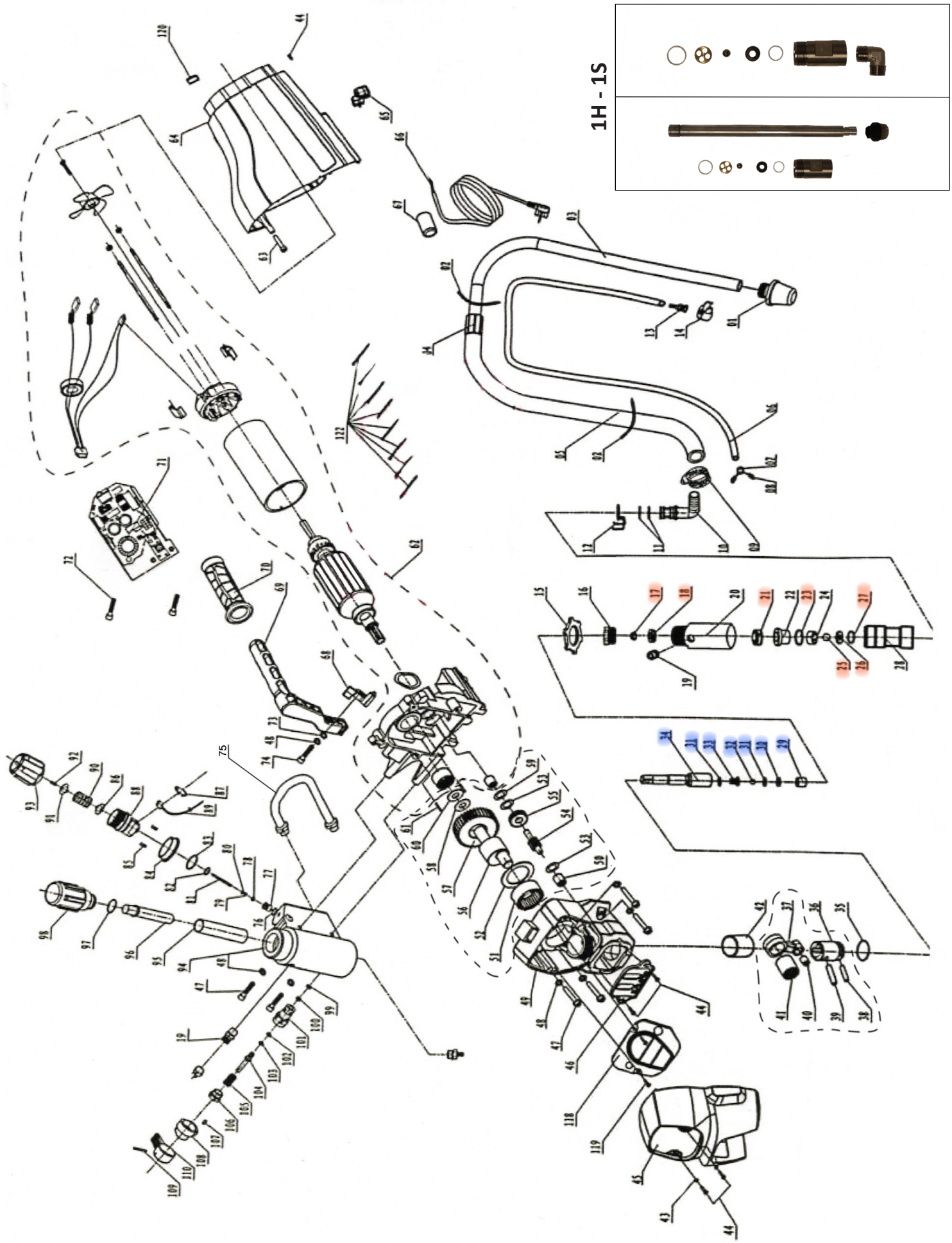

VS 410 - VS 410 HI

CODE	POS.	DESCRIPTION
410S001	1	Suction filter
410S002	2 a 11	Complete suction hose
410S006	6 a 8 + 13-14	Return pipe
410S009	9	Hose clamp collar
410S011	11	2 O-ring 19-2.65
410S012	12	Closing spring
410S015	15	Pump closing ring
410S016	16	Gasket tighteners
410S017	17 *	Centring gaskets
410S018	18 *	Upper gasket pack
410S019	19	Nipplo
410S020	20	Cylinder
410S021	21	Bottom gasket pack
410S022	22	Lower gasket pusher
410S023	23 *	Gasket
410S024	24	Suction valve ball cage
410S025	25 *	Suction valve ball Ø13
410S026	26 *	Intake valve ball seat
410S027	27 *	Intake valve gasket
410S028	28	Pump foot
410S029	29 +	Piston seal
410S030	30 +	Piston ball seat
410S031	31 +	Seat gasket x2
410S032	32 +	Piston ball
410S033	33 +	Piston valve
410S034	34 +	Piston
410S035	35	O-ring
410S036	36	Connector
410S037	37 a 41	Complete connecting rod
410S042	42	Piston pin
410S043	43	Flat washer
410S044	44	Hexagonal screw
410S045	45	Pump protection
410S046	46	Protection cage
410S047	47	Screw
410S048	48	Washer
410S049	49	Pump head body
410S050	50 a 61	Front engine

CODE	POS.	DESCRIPTION
410S062	62	Rear engine
410S063	63	Cross screw 48x20
410S064	64	Pump cover
410S065	65	Power cable housing
410S066	66	Power cable
410S067	67	Holding
410S068	68	Handle pin
410S069	69	Knob
410S070	70	Knob cover
410S071	71-72	Control card
410S073	73	Washer
410S074	74	Hexagon socket screws
410S075	75	Conductor tube
410S076	76 a 93	Pressure valve
410S094	94	Filter body
14-2675	95	Short lung filter
410S096	96	Filter holder
410S097	97	O-ring 24.3x1,8
410S098	98	Filter cap
410S099	99 a 110	Work recycle valve

VS 610 - VS 610 HI

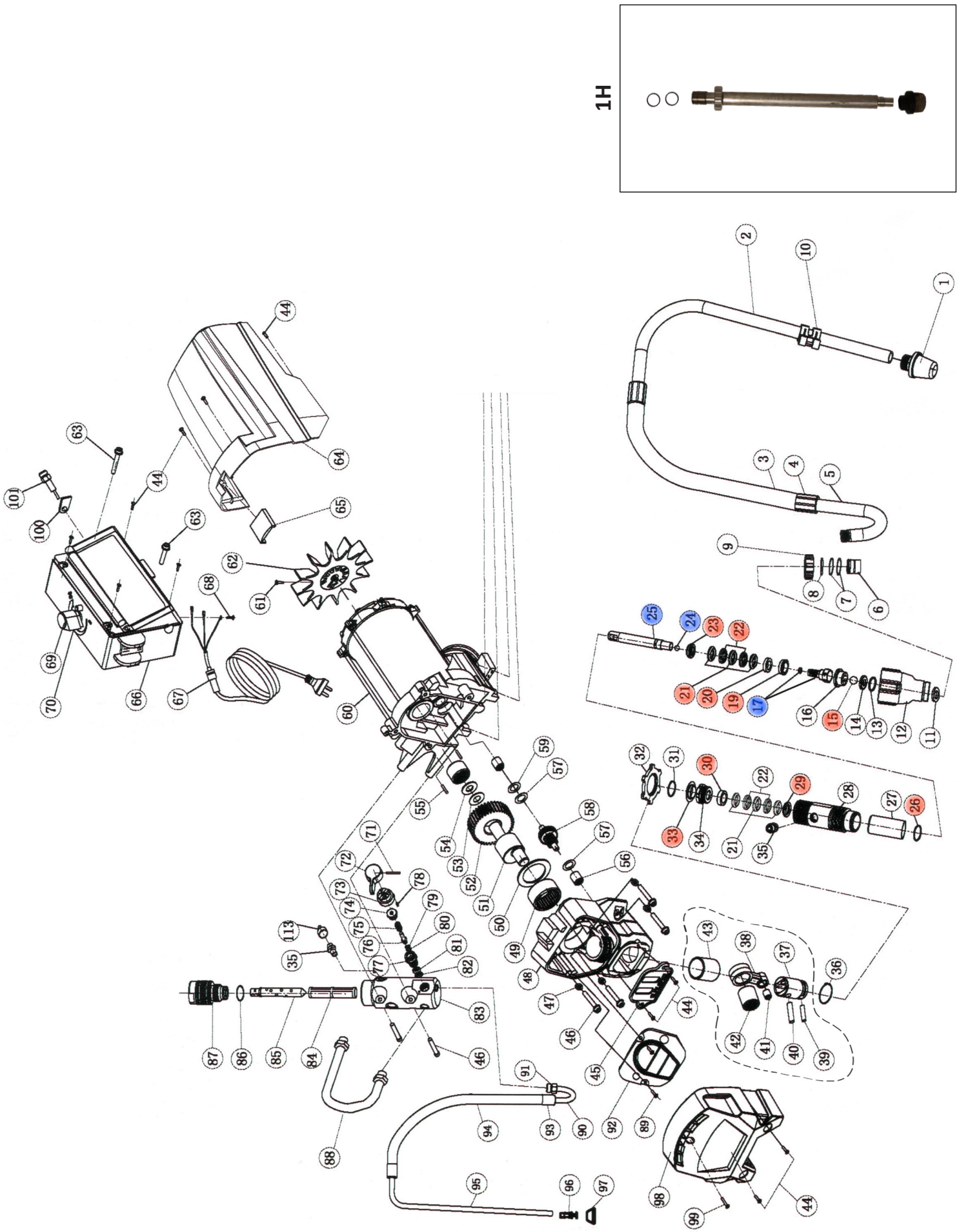

VS 610 - VS 610 HI

CODE	POS.	DESCRIPTION
410S001	1	Suction filter
610S002	2 a 9	Dip tube
610S010	10	Dip tube hook
610S011	11	Suction gasket
610S012	12	Suction valve
610S013	13	Valve seal
610S014	14	Suction ball seat
610S015	15 *	Intake valve ball
610S016	16	Sphere cage
610S017	17 +	Piston seat
610S019	19 *	U-shaped piston seal
610S020	20 *	Piston lower seal guide M
610S021	21-22 *	Mixed gasket kit
610S023	23 *	Piston bottom seal guide F
610S024	24 + *	Piston ball Ø8
610S025	25 +	Piston
610S026	26 *	Shirt gasket
610S027	27	Pumping shirt
610S028	28	Pumping sleeve
610S029	29 *	Upper seal guide M
610S030	30 *	Upper seal guide F
610S031	31	O-ring
610S032	32	Sealing ring
610S033	33 *	Gasket pusher cover
610S034	34	Gasket pusher
610S035	35	Nipplo
610S036	36	Joint pin retaining ring
610S037	37 a 43	Complete connecting rod

CODE	POS.	DESCRIPTION
610S044	44	Cross screws
610S045	45	Protective cover
610S046	46 a 59	Front engine
610S060	60	Rear engine
610S061	61	Screws
610S062	62	Engine propeller
610S063	63	Hexagonal screw
610S064	64	Engine cover
610S065	65	Engine cover block
610S066	66 a 70	Control box
610S067	67	Power cable 220 hp
610S069	69	Potentiometer
610S071	71 a 82	Valve recycling - work
610S083	83	Line filter body
14-2675	84	Filter type Graco 60M
610S085	85	Filter holder
610S086	86	O-ring
610S087	87	Cap
610S088	88	Connecting tube
610S091	91 a 97	Complete return pipe
610S098	98	Cover
610S099	99	Screws
610S100	100	Spacer
610S101	101	Transducer
610S01H		Extension cable + filter for VS610HI version
14-3064		Suction filter F 3/4'' UNF for VS610HI version
23-010		Tank kit complete with adapter and return tube
57-0610	+	Repair piston kit
20-0610	*	Repair pump kit
		Complete engine

VS 1110

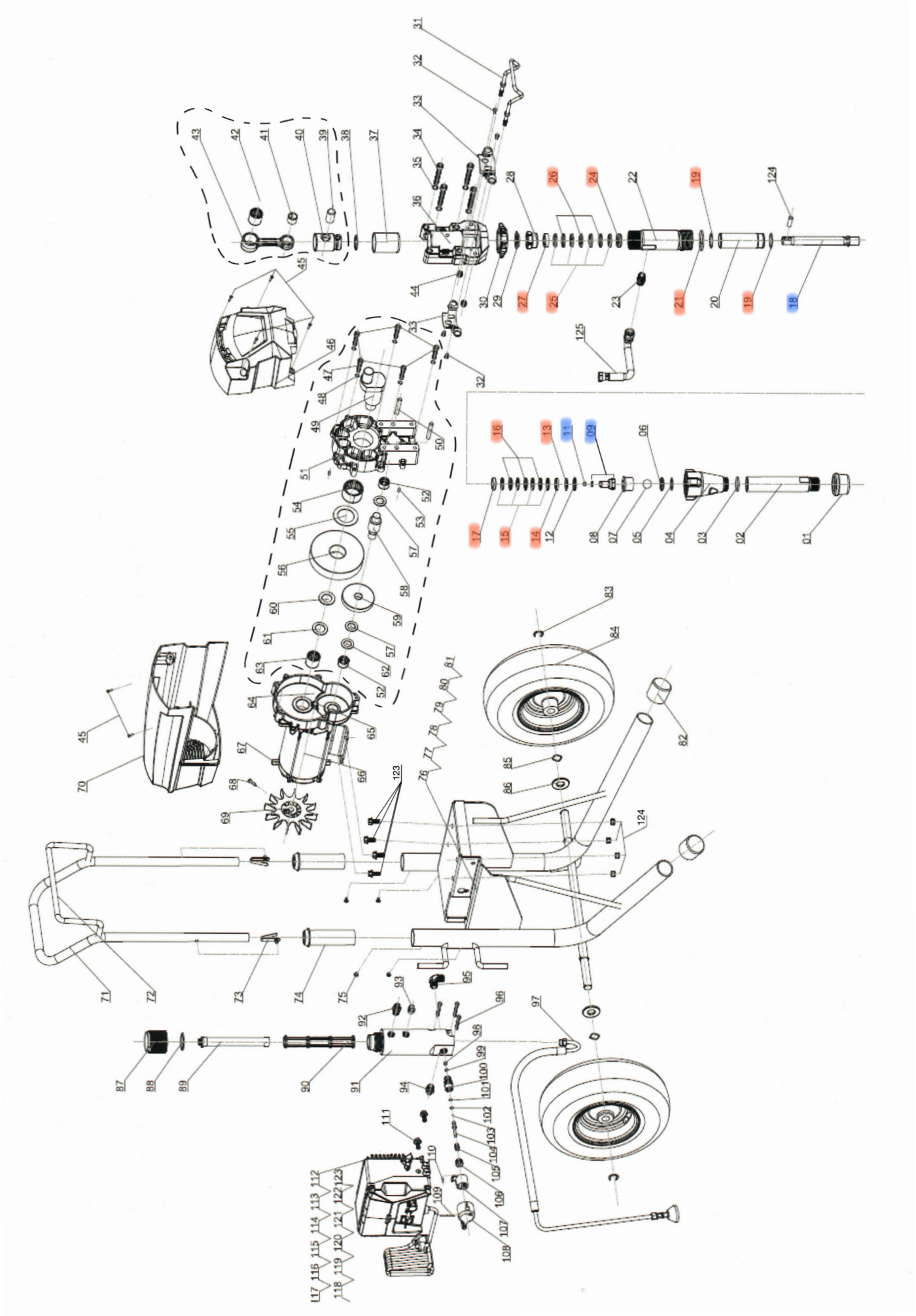

VS 1110

CODE	POS.		DESCRIPTION
14-1223	1		Suction filter
111S002	2		Pump extension
111S003	3		O-ring
111S004	4		Suction valve
111S005	5		O-ring Suction valve
111S006	6		Intake valve seat
111S007	7		Intake valve ball
111S008	8		Ball guide
111S009	9	+	Piston valve
111S011	11	+	Sphere Ø 9.5
111S012	12	*	Sealing gasket
111S013	13	*	U-shaped piston seal
111S014	14	*	Gasket guide inf. F
111S015	15-16	*	Bottom gasket kit 15x4 16x3
111S017	17	*	Gasket guide inf. M
111S018	18	+	Piston
111S019	19	*	2 O-ring
111S020	20		Shirt
111S021	21	*	O-ring 45x3,55
111S022	22		Pump sleeve
111S023	23		Nipplo
111S024	24	*	Upper gasket guide M
111S025	25+26	*	Top gasket kit 25x4 26x3
111S027	27	*	Upper gasket guide F
111S028	28		Gasket closure screw
111S029	29	*	Gasket pusher cover
111S030	30		Closing ring
111S031	31		External support
111S032	32		Screw 5x2
111S033	33		Piston cover
111S034	34		Screw M 10X65
111S035	35		Gasket
111S036	36		Connector lock
111S037	37		Bearing
111S038	38 a 43		Complete connecting rod
111S044	44		Locking nut
111S045	45		Screw M5x10
111S046	46		Cover

CODE	POS.	DESCRIPTION
111S047	47 a 63	Front engine
111S064	64 a 67	Rear engine
111S068	68	Propeller screw
111S069	69	Engine propeller
111S070	70	Engine cover
111S071	71 a 82 + 123 - 124	Cart
111S083	83	Seeger
111S084	84	Pneumatic wheel
111S085	85	Spring gasket
111S086	86	Gasket
111S087	87	Filter cap
111S088	88	O-ring
111S089	89	Filter holder
14-2695	90	Filter type Graco 60M
111S091	91	Filter body
111S092	92	Nipplo
111S093	93	Cap
111S094	94	Trasducer
111S095	95	L-shaped adapter
111S096	96	Hexagonal screw
111S097	97	Return tube
111S098	98 a 110	Valve recycling - work
111S111	111 a 123	Control box
111S119	119	Potentiometer
111S120	120	Switch

		Complete engine
23-1110		Tank kit 6l complete with adapter and return tube
57-1110	+	Repair piston kit
20-1110	*	Repair pump kit

VS 1510

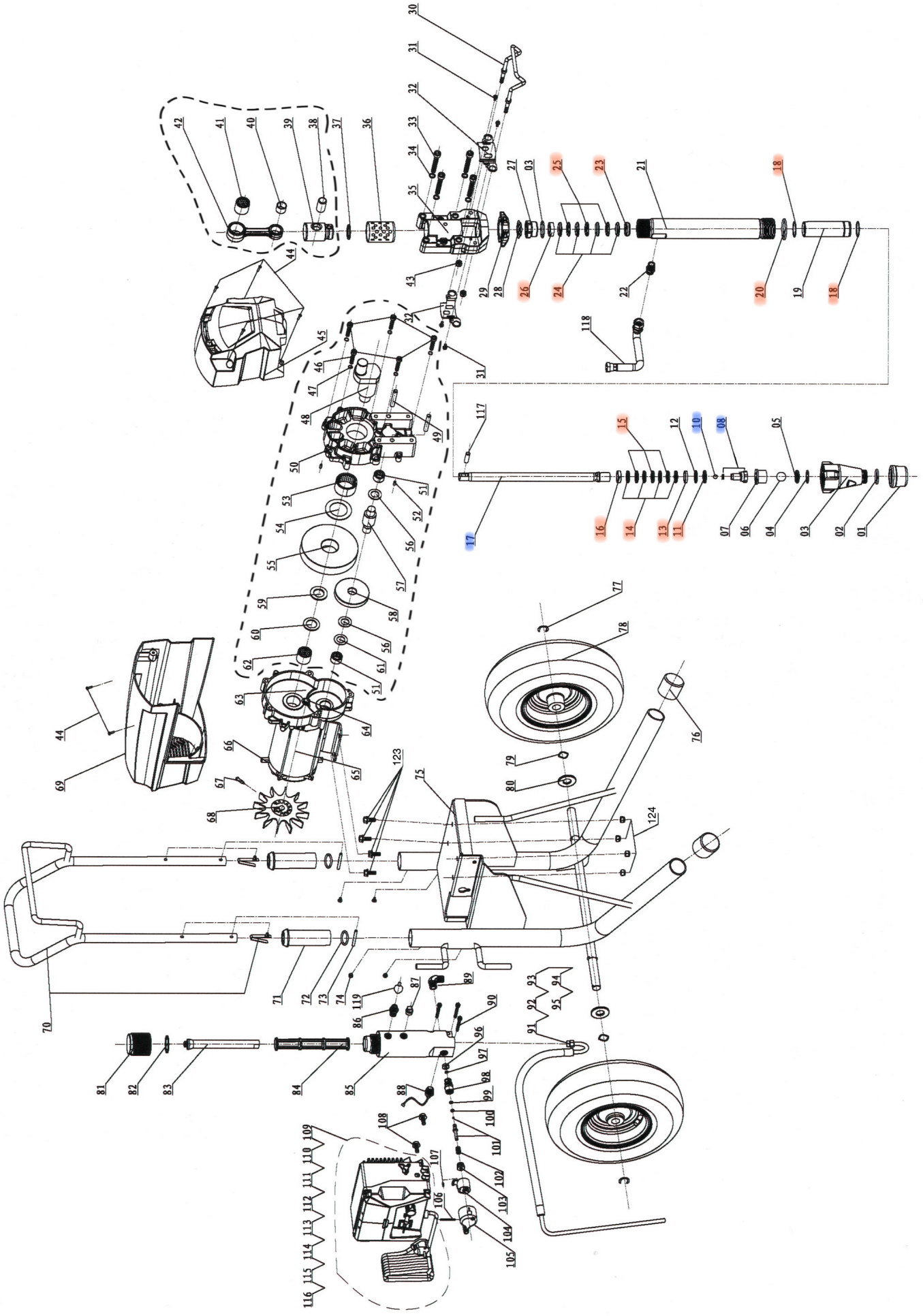

VS 1510

CODE	POS.	DESCRIPTION
14-1223	1	Suction filter
151S002	2	O-ring
151S003	3	Suction valve
151S004	4	O-ring suction valve
151S005	5	Intake valve seat
151S006	6	Intake valve ball
151S007	7	Guide ball
151S008	8 +	Piston valve
151S010	10 +	Sphere Ø 9.5
151S011	11 *	Sealing gasket
151S012	12 *	U-shaped piston seal
151S013	13 *	Gasket guide inf. F
151S014	14+15 *	Bottom gasket kit 14x4 15x3
151S016	16 *	Gasket guide inf. M
151S017	17 +	Piston
151S018	18 *	2 O-ring
151S019	19	Shirt
151S020	20 *	O-ring 45x3.55
151S021	21	Pumping sleeve
151S022	22	Nipplo
151S023	23 *	Upper gasket guide M brass
151S024	24+25 *	Gasket kit sup. 24x4 - 25x3
151S026	26 *	Upper gasket guide F brass
151S027	27	Sealing screw
151S028	28	Gasket pusher cover
151S029	29	Sealing ring
151S030	30	External support
151S031	31	Screw M5x12
151S032	32	Piston cover
151S033	33	Screw M10X65
151S034	34	Gasket
151S035	35	Connector block
151S036	36	Bearing
151S037	37	Gasket
151S038	38 a 42	Complete connecting rod
151S043	43	Nuts
151S044	44	Screws
151S045	45	Cover

CODE	POS.	DESCRIPTION
151S046	46 a 62	Front engine
151S063	63 a 66	Rear engine
151S067	67	Propeller screw
151S068	68	Engine propeller
151S069	69	Engine cover
151S070	70 a 76 + 123 - 124	Cart
151S077	77	Seeger
151S078	78	Pneumatic wheel
151S079	79	Spring gasket
151S080	80	Gasket
151S081	81	Tappo filtro
151S082	82	Filter cap
151S083	83	O-ring
14-2695	84	Filter holder
151S085	85	Filter body
151S086	86	Nipplo
151S087	87	Cap
151S088	88	Trasducer
151S089	89	L-bend
151S090	90	Screws
151S091	91 a 95	Return tube
151S096	96 a 107	Valve recycling - work
151S108	108 a 116	Control box
151S117	117	Piston pin
151S118	118	Connector tube
151S119	119	Potentiometer
151S120	120	Switch
151S122	122	Gasket
23-1510		Tank kit complete with adapter and return tube
57-1110	+	Repair piston kit
20-1110	*	Repair pump kit
		Complete engine

HSS 8900

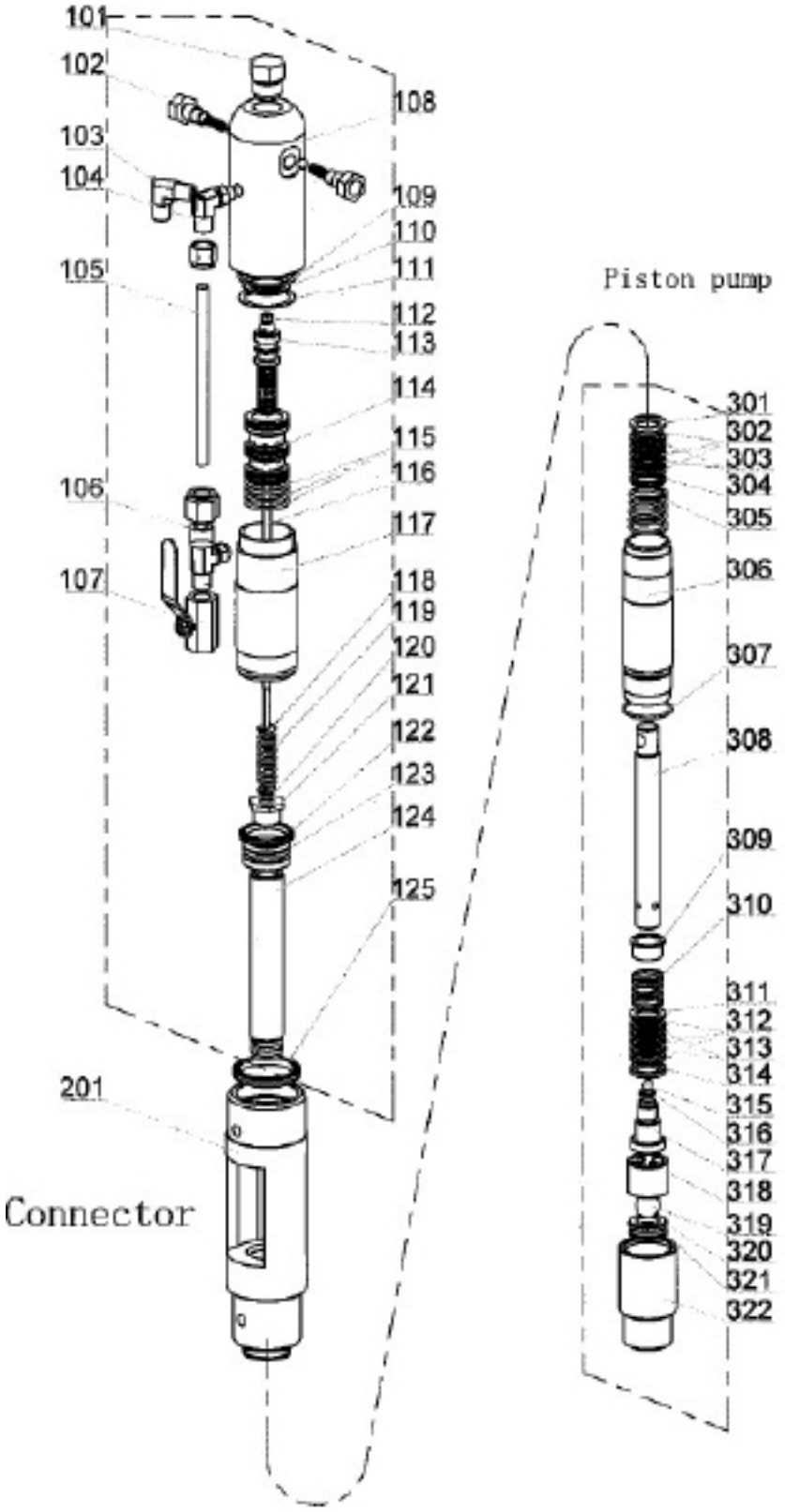

PRICES ON REQUEST

ULTRAMAX HH

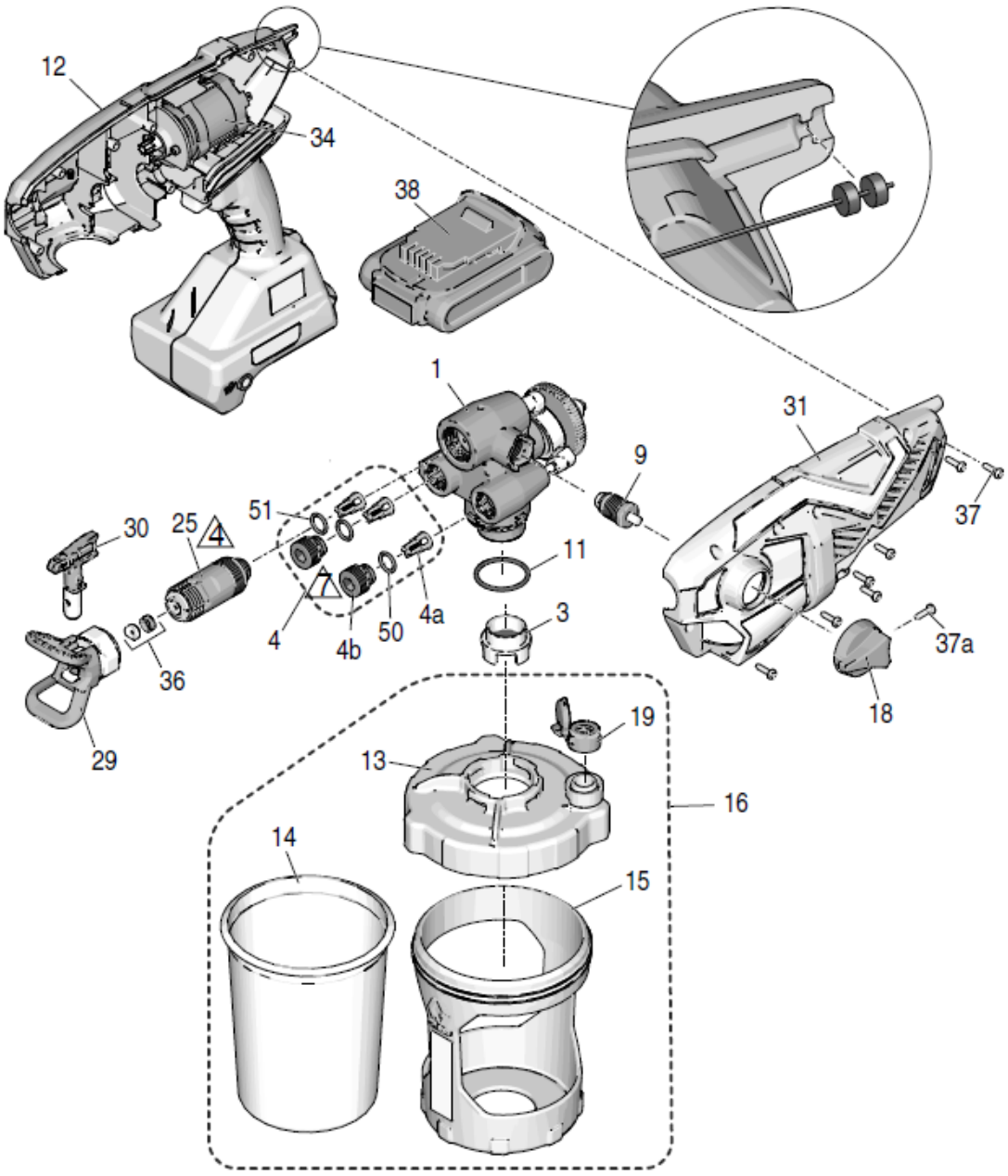

POS.	CODE	DESCRIPTION
1	17P187	Kit, pump assembly includes 4, 9, 11, 25
3	17P554	Filter. pump, 60 mesh, 3 pack
4	17P183	Kit, outlet valve repair includes 3 of 4a, 2 of 4b, 2 of 50,1 of 51
9	17R420	Prime Pump/Spray valve includes 18, 1 of 37a
11	125249	O-ring
12	17P181	Kit, Smartcontrol with enclosure includes 31, 34, 7 of 37, 34, 52
13	17N517	Lid, cup includes 1 of 19
14	17A226	FlexLiner, 32 oz. (3-pack
14	17P212	FlexLiner, 32 oz. (25-pack)
14	17F005	FlexLiner, 42 oz. (3-pack)
14	17P549	FlexLiner, 42 oz. (25-pack)
15	17N392	Support, cup, 32 oz.
16	17P551	Kit cup support, lid and plug 32oz
16	17P553	Kit cup supp. lid plug 72 oz
17	17R611	Plug, cup lid

POS.	CODE	DESCRIPTION
18	17M882	Prime Pump/Spray knob
19	17P712	VacuValve cap (3-pack)
25	17P175	Kit, front valve includes 51
29	17P573	Guard, spray tip 7/8” FFLP
30	FFLPXXX	Spray tip RAC X FF LP
36	17P501	Kit, tip seat and seal (5-pack)
36	17P502	Kit, tip solvents (5-pack)
37	17R614	Screw, cross-head
37a	128726	Screw, cross-head
38	17P557	Lition Battery Pack DEWALT
39	17P560	Battery Charger DEWALT
50	118594	O-ring
51	117724	O-ring

ENERGY 21

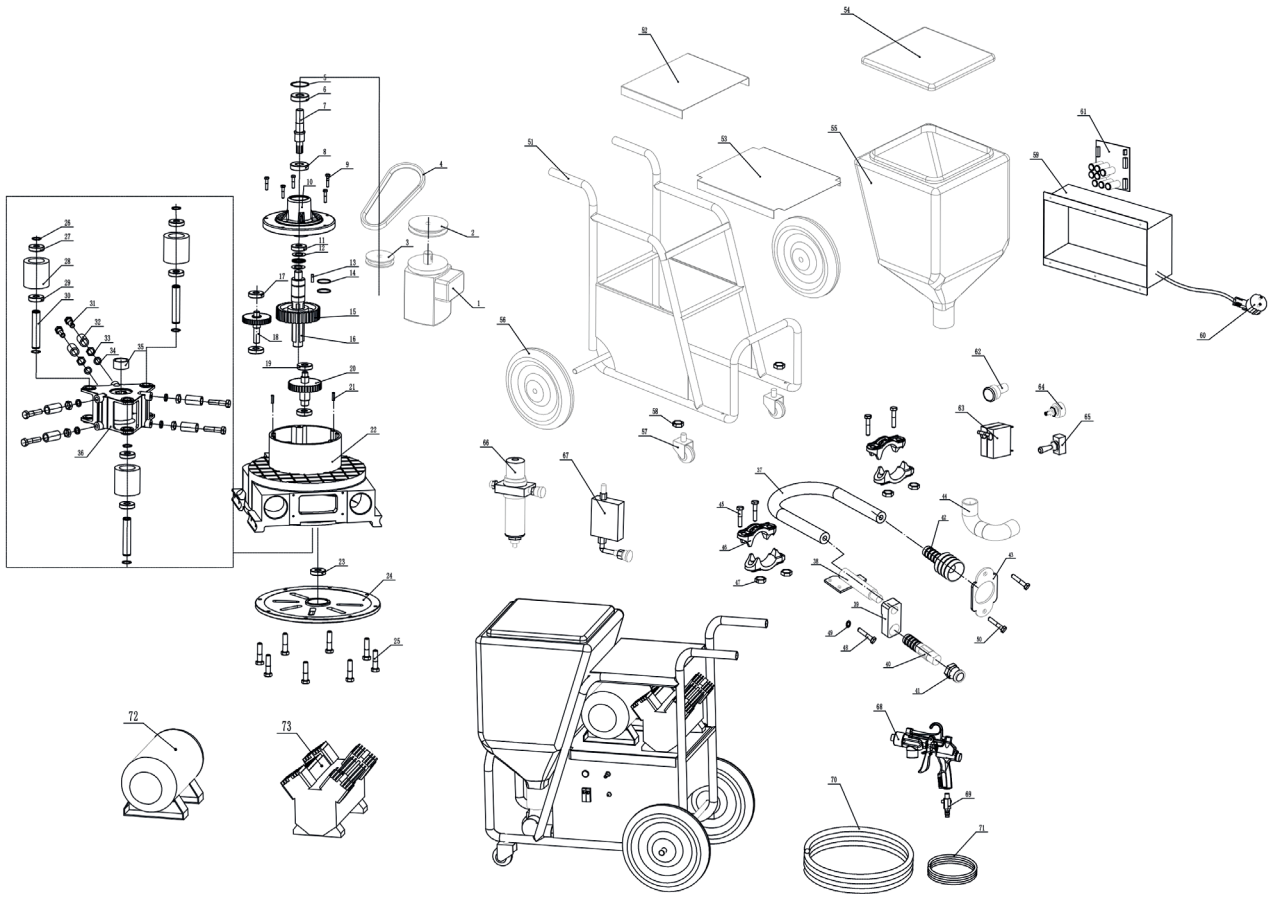

CODE	POS.	DESCRIPTION
EN2101	1	Motor
EN2102	2	Pulley
EN2103	3	Pulley 2
EN2104	4	Belt
EN2105	5	Clips
EN2106	6	Buffer
EN2107	7	Tree
EN2108	8	Buffer
EN2109	9	Screws
EN21010	10	Flange
EN21011	11	Guidebook
EN21012	12	Guidebook
EN21013	13	Plug
EN21014	14	O-ring
EN21015	15	Cog
EN21016	16	Tree
EN21017	17	Buffer
EN21018	18	Post
EN21019	19	Buffer
EN21020	20	Cog
EN21021	21	Plug
EN21022	22	Pump body
EN21023	23	Buffer
EN21024	24	Flange
EN21025	25	Screws
EN21026	26	Guidebook
EN21027	27	Buffer
EN21028	28	Top hat
EN21029	29	Buffer
EN21030	30	Tree
EN21031	31	Stopper
EN21032	32	Diffuser
EN21033	33	Locknut
EN21034	34	Soft
EN21035	35	Top hat
EN21036	36	Triangular body

CODE	POS.	DESCRIPTION
EN21037	37	Peristaltic tube
EN21038	38	Connector
EN21039	39	Flange
EN21040	40	Connector
EN21041	41	Adaptor
EN21042	42	Adaptor
EN21043	43	Gasket
EN21044	44	Conduit
EN21045	45	Screws
EN21046	46	Clip closure
EN21047	47	Nut
EN21048	48	Screws
EN21049	49	Gasket
EN21050	50	Screws
EN21051	51	Shopping cart
EN21052	52	Lid
EN21053	53	Lid
EN21054	54	Lid
EN21055	55	Container
EN21056	56	Wheel
EN21057	57	Wheel
EN21058	58	Nut
EN21059	59	Box
EN21060	60	Plug
EN21061	61	Electronic card
EN21062	62	Switch
EN21063	63	Switch
EN21064	64	Potentiometer
EN21065	65	Switch
EN21066	66	Filter regulator
EN21067	67	Pneumatic sensor
EN21069	69	Air regulator
EN21070	70	25 Tube 10 meters
EN210705	70	25 Tube 7,5 mt
EN21071	71	Air hose 11,8 mt
EN21072	72	Compressor cylinder
EN21073	73	Air pump

LINE 6500

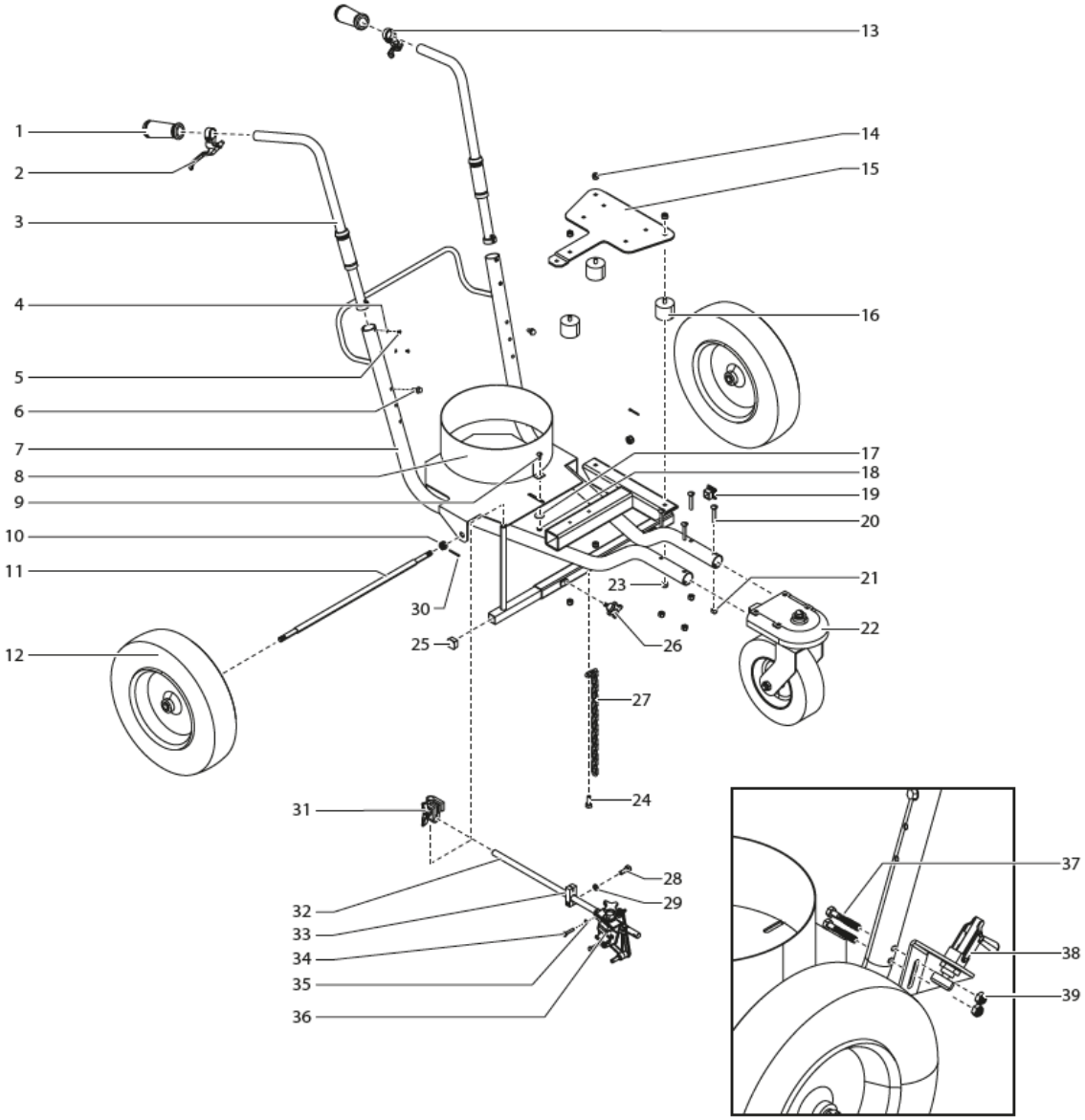

POS.	CODE	DESCRIPTION
1	509211	Handle grip (2pcs)
2	528231	Trigger
3	523232	Handle assembly
4	209386	Lock washer
5	295608	Screw
6	508590	Hexagon nut
7	528187	Cart body
8	528188	Bucket holder
9	509247	Screw
10	509225	Nut
11	528189	Axis
12	528190	Rear wheel
13	528191	Brake lever
14	509293	Nut
15	528192	Mounting plate
16	509770	Spacer
17	555489	Washer
18	500527	Nut
19	509231	Cap
20	528193	Screw

POS.	CODE	DESCRIPTION
21	295615	Nut
22	528303	Wheel set
23	509293	Nut
24	509553	Hexagon nut
25	254499	Cap
26	528195	Knob assembly
27	555413	Grounding chain
28	509553	Screw
29	509292	Washer
30	509226	Pin
31	528196	Clamp assembly
32	528197	Arm support
33	528198	Cable mounting clamp
34	509775	Hexagon nut
35	509772	Washer
36	509171	Gun support
37	528199	Pin
38	528204	Brake assembly
39	528205	Locking nut

LINE 6500

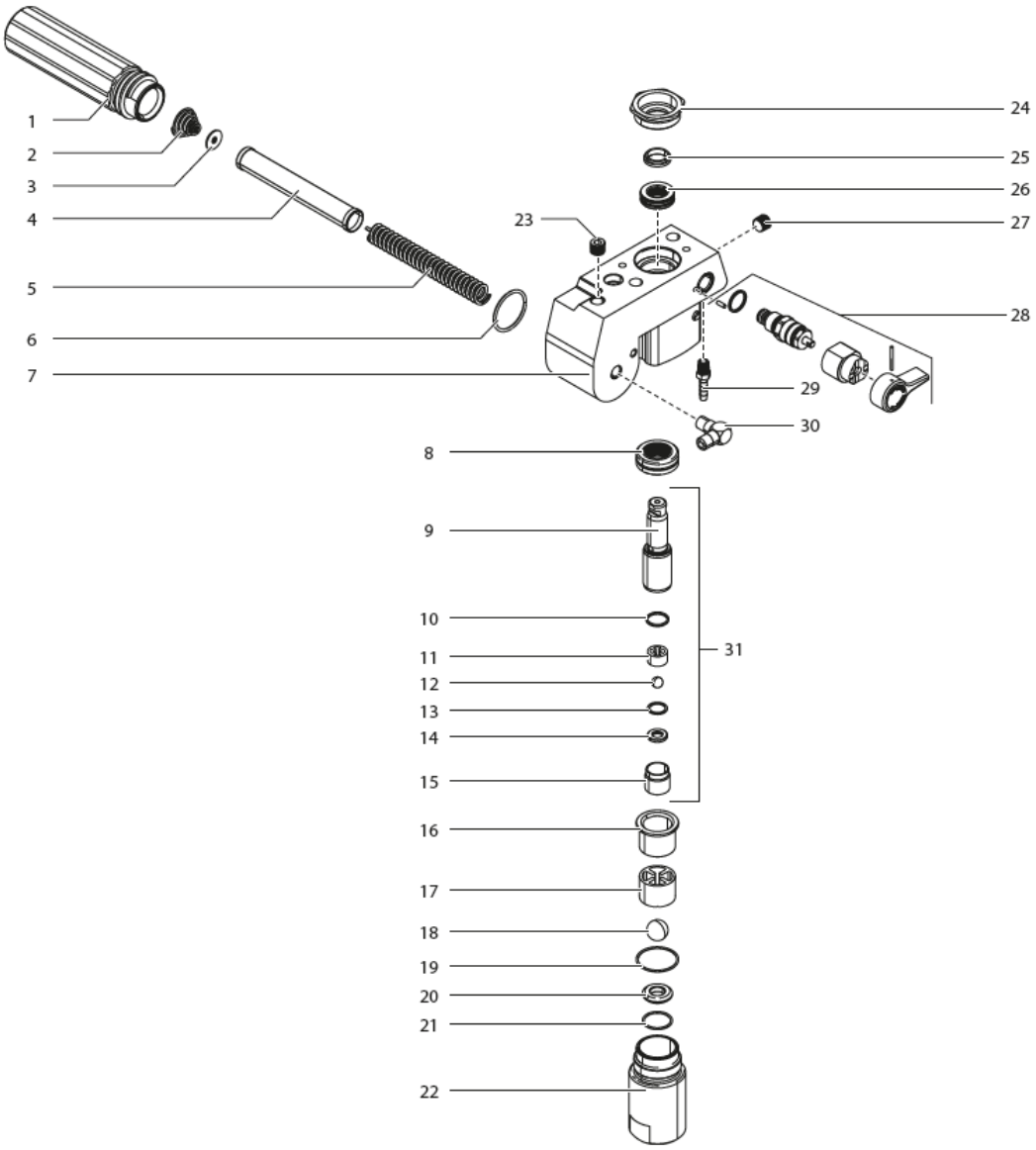

POS.	CODE	DESCRIPTION
1	508601	Filter upper body
2	508602	Filter spring
3	508603	Washer
4	14-2097	60M Filter
5	508749	Spring
6	508604	Gasket
7	551681	Group support
8	507274	Inferior packing
9	508597	Piston rod
10	507734	Gasket
11	507945	Seat
12	987415	Ball
13	507454	Washer
14	294516	Seat
15	507733	Suction valve body
16	555002	Cyilinder seal
17	507944	Seat
18	355151	Ball
19	508599	PTFE O-ring

POS.	CODE	DESCRIPTION
20	350031	Seat
21	509582	PTFE O-ring
22	759049	Sleeve
23	507517	Cap
24	508592	Nut
25	508593	Piston guide
26	507273	Upper packing
27	507517	Cap
28	354726	Drain valve
29	551530	Drain fitting
30	351244	L-fitting
31	507258	Complete piston
	507877	Repair kit (contains positions (8-10-12-13-16-18-19-21-25-26)
	5078L1	Board circuits
	5078L2	Transducer
	5078L3	Pressure sensor

LINE 8500

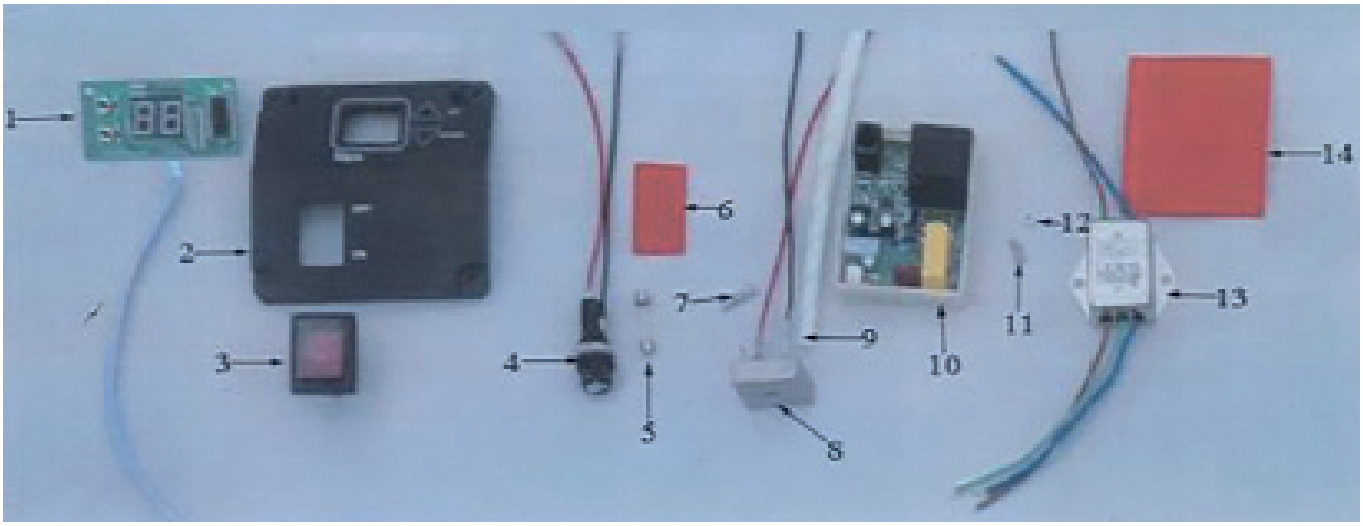

CODE	POS.	DESCRIPTION
315101DP	1	Digital display
315102DP	2	Electronic board box
315103DP	3	Switch
315104DP	4	Fuse holder
315105DP	5	Fuse
315106DP	6	Wiring harness and sensor tape
315107DP	7	Screw
315108DP	8	Sensor
315109DP	9	Wiring pipe
315110DP	10	Electronic card
315111DP	11	Screw
315112DP	12	Gasket
315113DP	13	Coil
315114DP	14	Wiring tape



CODE	POS.	DESCRIPTION
315401DP	1	Filter top
315402DP	2	Filter
315403DP	3	O-ring nylon
315404DP	4	Nipple
315405DP	5-6-7-8-9-10-11-12	Recycling valve
315413DP	13	Nipple
315414DP	14	Connector
130001	15	Pressure gauge 400 Bar
315416DP	16	Pressure gauge
315417DP	17	O-ring
315418DP	18	Gasket
315419DP	19	Bolt

LINE 8500

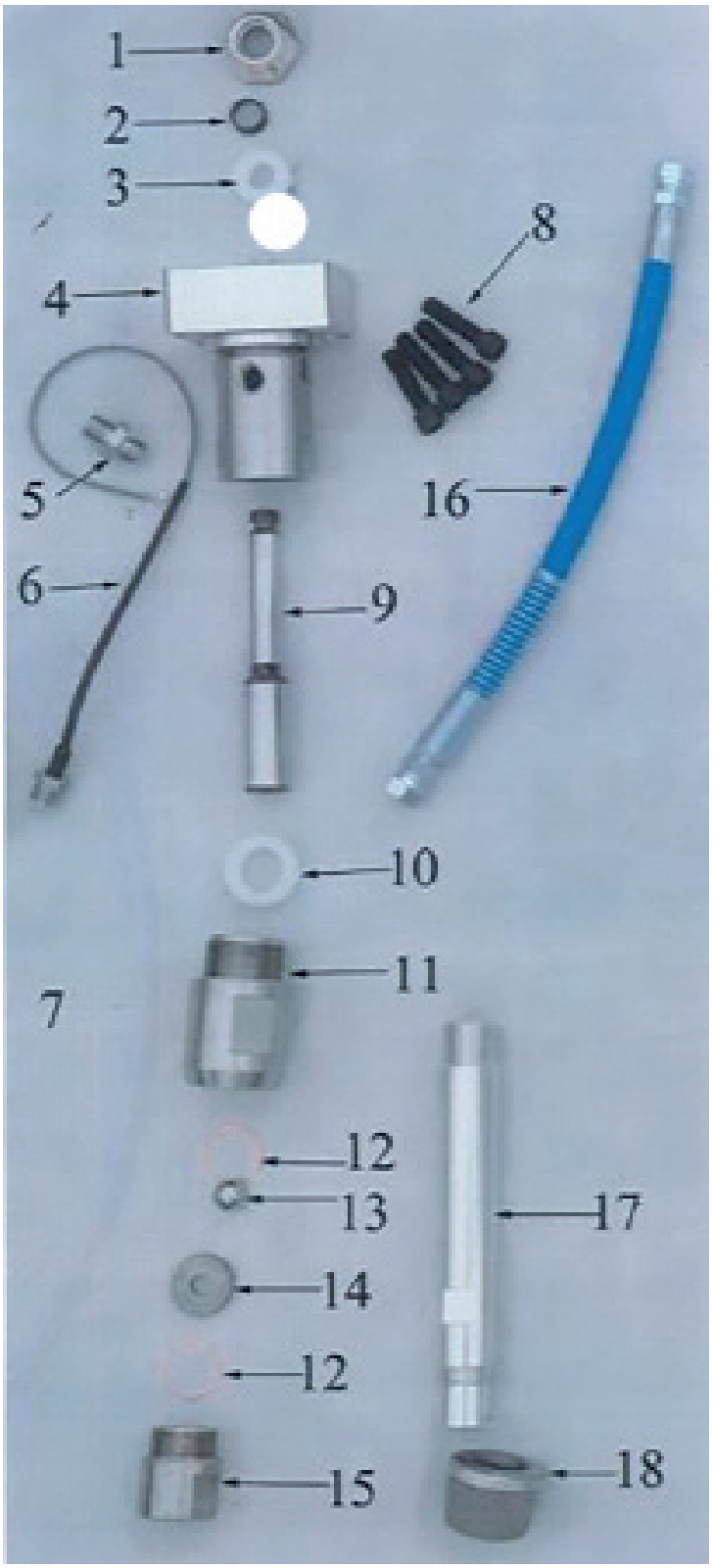

CODE	POS.	DESCRIPTION
V31301DP	1	Patch screw
V31302DP	2	Piston guide
V31303DP	3	Top seal kit
V31304DP	4	Pump block
V31305DP	5	Nipple
V31306DP	6	Pressure sensor
V31307DP	7	Return pipe
V31308DP	8	Bolt
V31309DP	9	Piston
V313010DP	10	Gasket kit
V313011DP	11	inferior
V313012DP	12	Top hat
V313013DP	13	O-ring
V313014DP	14	Sphere
V313015DP	15	Valve seat
V313016DP	16	Intake valve
V313017DP	17	High pressure hose
V313018DP	18	Angler

VTP 010 / VTS 201

Code	pos.	Description
30200		Check valve 3/8”
33114	1	Valve body
30153B	3B	S.steel upper ball guide
33153	2	S.steel spring
30153	3	S.steel inferior ball guide
SF11	4	TC ball Ø 11
33115	5 + 6	Ball seat CT 16
RR22	7	Copper washer

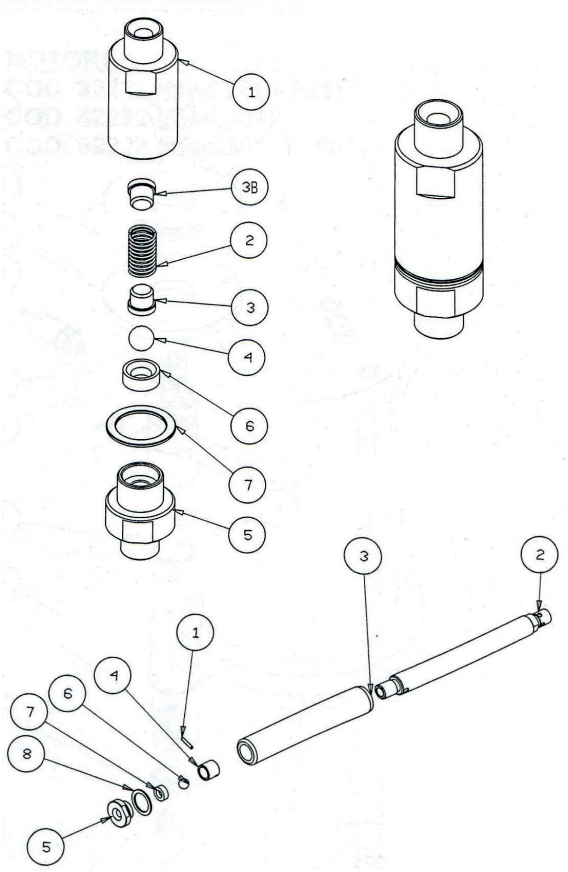

Code	pos.	Description
TS30500		Complete piston
TS30137	1	Ball stop pin
TS30132A	2 + 3	Rod assemly
TS30147	4	Ball guide
TS30146	5 + 7	Ball seat and support TC16
490011	6	S. steel ball ø 11
RN34	8	Nylon washer

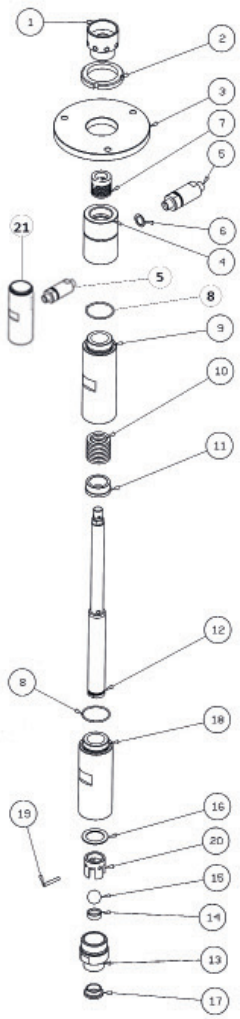

Code	pos.	Description
TS30107	1	Sealing gland
TN33108	2	Sealing ring
TS3010	3	Pump support
TS30106	4	Hub
30200	5	Check valve 3/8”
RR38	6	Copper washer
TS30300	7	Upper gasket set (11 pcs)
TS33156	8	O-ring PTFE
TS30109	9	Upper unit sleeve
TS30400	10	Lower gasket set (6 pcs)
TS30184	11	Lower internal seal gland
TS30500	12	Complete piston
TN30110	13 + 14	Complete intake valve
490025	15	Sfera Ø 25
TN30182	16	Suction valve seal
TN30183	17	Lower suction valve gasket
TS30111	18	Lower unit sleeve
TN30181	19	Ball stopping pin
TN30180	20	Suction valve ball guide
TN30170UNI	21	Unified upper barrel assembly (new model)
TS30140		Upper gasket sealing set
TS30143		Lower gasket sealing set

ECO 401 P / TS / TSR

Code	pos.	Description
30200		Check valve 3/8”
33114	1	Valve body
30153B	3B	S.steel upper ball guide
33153	2	S.steel spring
30153	3	S.steel inferior ball guide
SF11	4	TC ball Ø 11
33115	5 + 6	Valve ring with ball seat CT 16
RR22	7	Washer rame

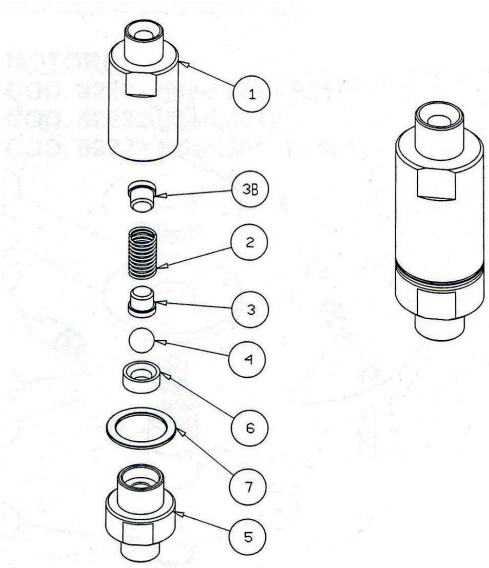

Code	pos.	Description
30500		Complete piston
30153-1	1	Ball stop pin
30132	2 + 3	Rod assemly
30147	4	Ball guide
TN30146	5 + 7	Ball seat and support TC16
490011	6	S. steel ball ø 11
RN22	8	Nylon washer
400443E	9	Spring
400447E	10	Ball guide

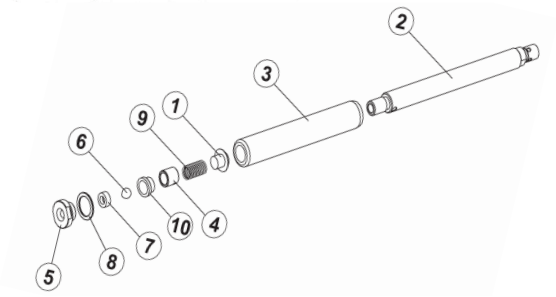

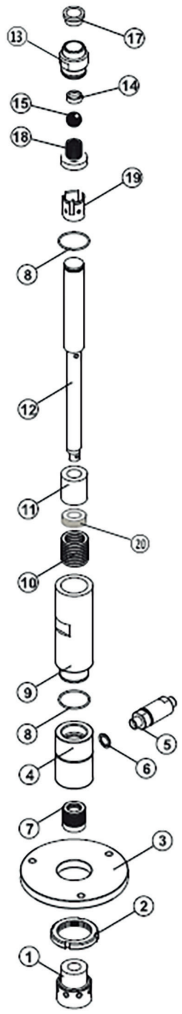

Code	pos.	Description
30107	1	Sealing gland
33108	2	Sealing ring
3010S	3	Pump support
30106	4	Hub
30200	5	Check valve 3/8”
RR38	6	Copper washer
TN30300	7	Upper gasket set (7 pcs)
33156	8	O-ring PTFE
30109	9	Upper unit sleeve
TN30400	10	Lower gasket set (5 pcs)
30184	11	Lower internal seal gland
30500	12	Complete piston
TN30110	13 + 14	Complete intake valve
490025	15	Ball Ø 25
30183	17	Lower suction valve gasket
33153C	18	Lower unit sleeve
30180	19	Ball stopping pin
33120S	20	Suction valve ball guide
TN30140		Upper gasket sealing set
TN30143		Lower gasket sealing set

VTN 401

Code	pos.	Description
30200		Check valve 3/8”
33114	1	Valve body
30153B	3B	S.steel upper ball guide
33153	2	S.steel spring
30153	3	S.steel inferior ball guide
SF11	4	TC ball Ø 11
33115	5 + 6	Valve ring base seat CT 16
RR22	7	Copper washer

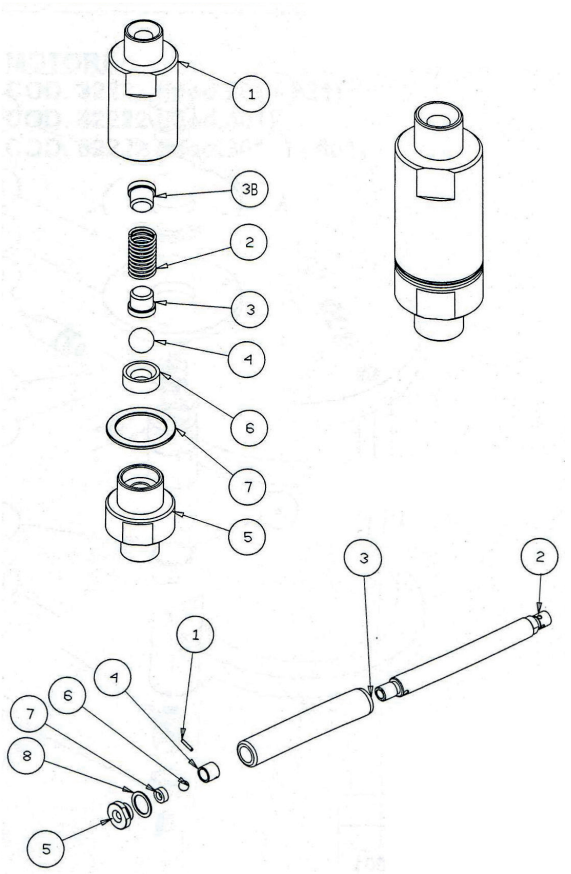

Code	pos.	Description
TN30500A		Complete piston
TN30137	1	Ball stop pin
TN30132	2 + 3	Rod assemly
TN30147	4	Ball guide
TN30146	5 + 7	Ball seat and support TC16
490011	6	S. steel ball ø 11
RN22	8	Nylon washer

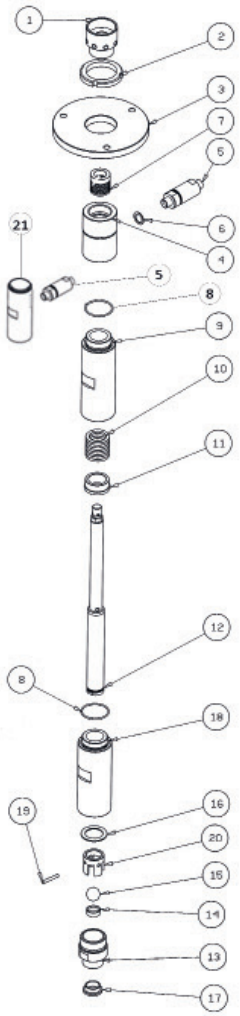

Code	pos.	Description
TN30107	1	Sealing gland
TN33108	2	Sealing ring
TS3010	3	Pump support
TN30106	4	Hub
30200	5	Check valve 3/8”
RR38	6	Copper washer
TN30300	7	Upper gasket set (7 pcs)
TN33156	8	O-ring PTFE
TN30109	9	Upper unit sleeve
TN30400	10	Lower gasket set (5 pcs)
TN30184	11	Lower internal seal gland
TN30500A	12	Complete piston
TN30110	13 + 14	Complete intake valve
490025	15	Ball Ø 25
TN30182	16	Suction valve seal
TN30183	17	Lower suction valve gasket
TN30111	18	Lower unit sleeve
TN30181	19	Ball stopping pin
TN30180	20	Suction valve ball guide
TN30170UNI	21	Unified upper barrel assembly (new model)
TN30140		Upper gasket sealing set
TN30143		Lower gasket sealing set

VTN 321

Code	pos.	Description
30200		Check valve 3/8”
33114	1	Valve body
30153B	3B	S.steel upper ball guide
33153	2	S.steel spring
30153	3	S.steel inferior ball guide
SF11	4	TC ball Ø 11
33115	5 + 6	Valve ring with seat CT 16
RR22	7	Copper washer

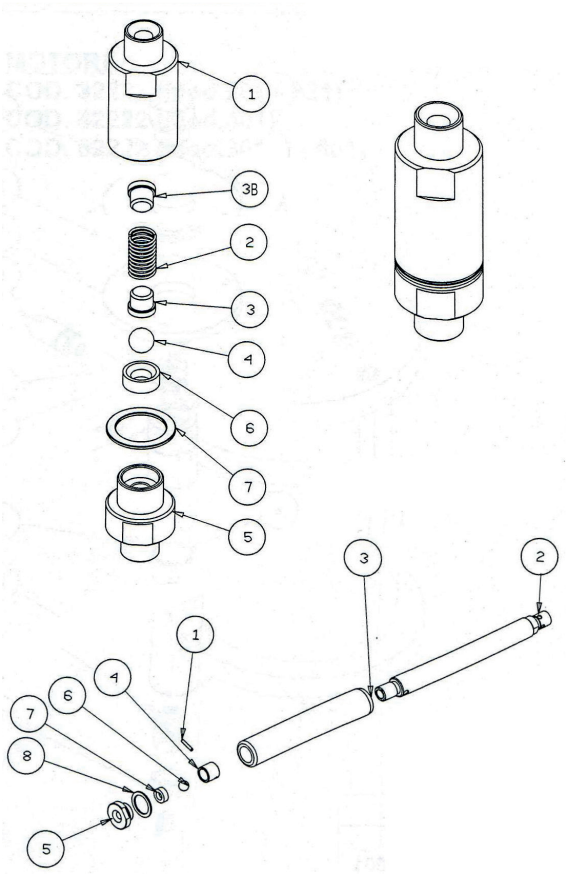

Code	pos.	Description
TN30500A		Complete piston
TN30137	1	Ball stop pin
TN30132	2 + 3	Rod assemly
TN30147	4	Ball guide
TN30146	5 + 7	Ball seat and support TC16
490011	6	S. steel ball ø 11
RN22	8	Nylon washer

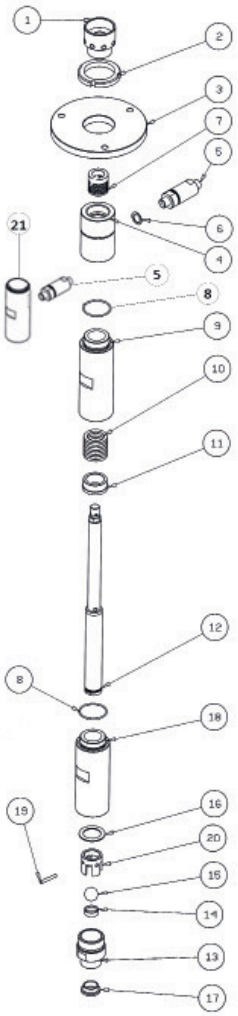

Code	pos.	Description
TN30107	1	Sealing gland
TN33108	2	Sealing ring
TN3010	3	Pump support
TN30106	4	Hub
30200	5	Check valve 3/8”
RR38	6	Copper washer
TN30300	7	Upper gasket set (7 pcs)
TN33156	8	O-ring PTFE
TN30109	9	Upper unit sleeve
TN30400	10	Lower gasket set (5 pcs)
TN30184	11	Lower internal seal gland
TN30500A	12	Complete piston
TN30110	13 + 14	Complete intake valve
490025	15	Ball Ø 25
TN30182	16	Suction valve seal
TN30183	17	Lower suction valve gasket
TN30111	18	Lower unit sleeve
TN30181	19	Ball stopping pin
TN30180	20	Suction valve ball guide
TN30170UNI	21	Unified upper barrel assembly (new model)
TN30140		Upper gasket sealing set
TN30143		Lower gasket sealing set

VTS 301

Code	pos.	Description	
30200		Check valve 3/8”	
33114	1	Valve body	
30153B	3B	S.steel upper ball guide	
33153	2	S.steel spring	
30153	3	S.steel inferior ball guide	
SF11	4	TC ball Ø 11	
33115	5 + 6	Base valve with seal CT 16	
RR22	**7**	Washer rame	**€ 0,11**

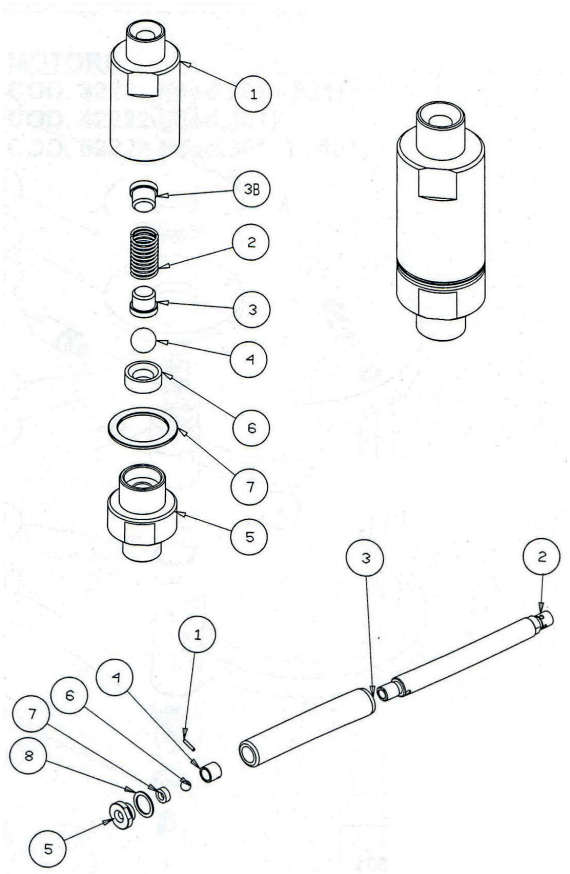

Code	pos.	Description
TN30500A		Complete piston
TN30137	1	Ball stop pin
TN30132	2 + 3	Rod assembly
TN30147	4	Internal ball guide
TN30146	5 + 7	Ball seat and support TC16
490011	6	Stainless steel sphere ø 11
RN22	8	Washer in Nylon

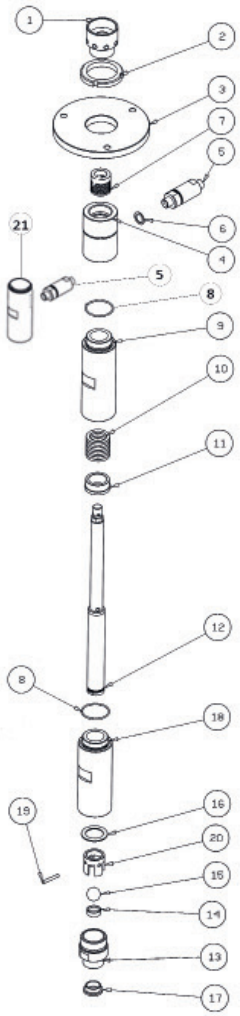

Code	pos.	Description
TN30107	1	Sealing gland
TN33108	2	Sealing ring
TS3010	3	Pump support
TN30106	4	Hub
30200	5	Check valve 3/8”
RR38	6	Copper washer
TN30300	7	Upper gasket set (11 pcs)
TN33156	8	O-ring PTFE
TN30109	9	Upper unit sleeve
TN30400	10	Lower gasket set (6 pcs)
TN30184	11	Lower internal seal gland
TN30500A	12	Complete piston
TN30110	13 + 14	Complete intake valve
490025	15	Ball Ø 25
TN30182	16	Suction valve seal
TN30183	17	Lower suction valve gasket
TN30111	18	Lower unit sleeve
TN30181	19	Ball stopping pin
TN30180	20	Suction valve ball guide
TN30170UNI	21	Unified upper barrel assembly (new model)
TN30140		Upper gasket sealing set
TN30143		Lower gasket sealing set

S-ECO 25

Code	pos.	Description
30200		Check valve 3/8”
33114	1	Valve body
30153B	3B	S.steel upper ball guide
33153	2	S.steel spring
30153	3	S.steel inferior ball guide
SF11	4	TC ball Ø 11
33115	5 + 6	Base valve with seal CT 16
RR22	7	Copper Washer

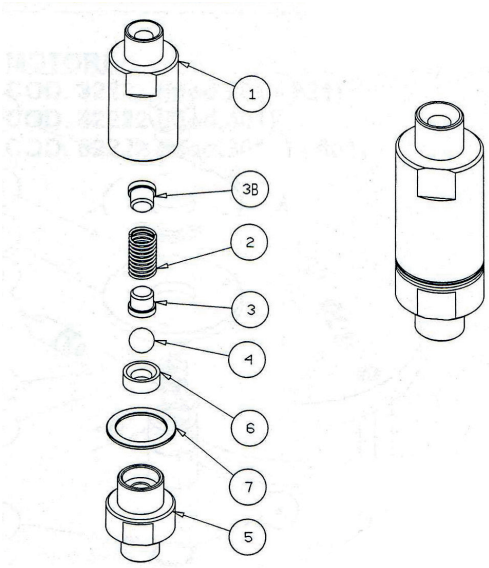

Code	pos.	Description
SE30500		Complete piston
30153-1	1	Ball stop pin
SE30132	2 + 3	Rod assembly
30147	4	Internal ball guide
TN30146	5 + 7	Ball seat and support TC16
490011	6	Sfera inox ø 11
RN22	8	Washer in Nylon
400443E	9	Spring
400447E	10	Ball guide

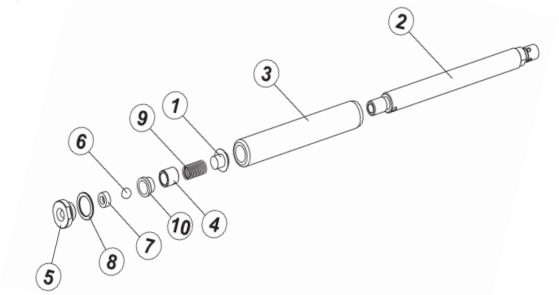

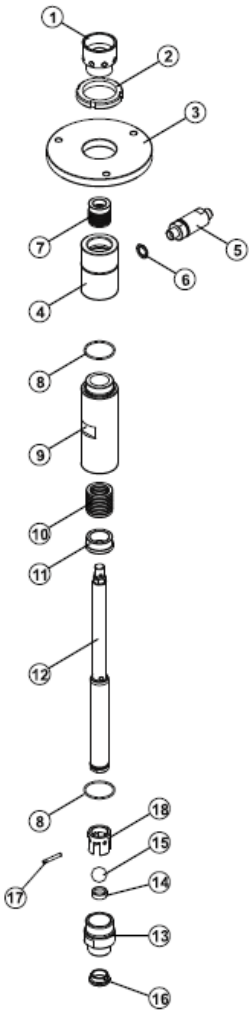

Code	pos.	Description
SE30107	1	Sealing gland
SE33108	2	Sealing ring
SE3010	3	Pump support
SE30106	4	Hub
30200	5	Check valve 3/8”
RR38	6	Copper washer
TN30300	7	Upper gasket set (11 pcs)
SE33156	8	O-ring PTFE
SE30109	9	Upper unit sleeve
TN30400	10	Lower gasket set (6 pcs)
SE30184	11	Lower internal seal gland
SE30500	12	Complete piston
SE30110	13 + 14	Complete intake valve
490025	15	Ball Ø 25
SE30182	16	Suction valve seal
TN30181	17	Lower suction valve gasket
TN30180	18	Lower unit sleeve
TN30140		Upper gasket sealing set
TN30143		Lower gasket sealing set

VTN/S ACCESSORIES

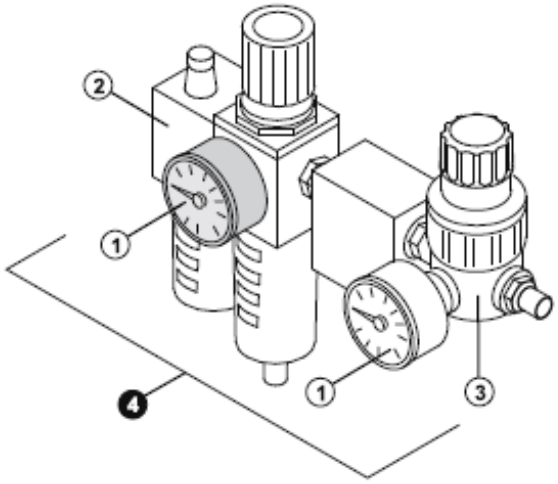

Code	Description
30700	Complete regulator set (Regulator + lubricator) for VTN/S
MA012	Pressure gauge with posterior connection 0-12 bar M 1/8" for VTN/S

Code	Description
30900	Complete regulator set (Regulator + lubricator) for S-ECO25
212484	Pressure gauge 0-12 bar ø50mm posterior connection 1/8" in glass
MIN07	Regulation filter without pressure gauge 3/8" 0-8 bar
MIN08	Lubricator filter without pressure gauge attacco 3/8" 0-8 bar
CARE14	Air regulator MR08 0-8 bar FF 1/4” + F 1/8” for Airmix setup
F30900SV	Single regulator

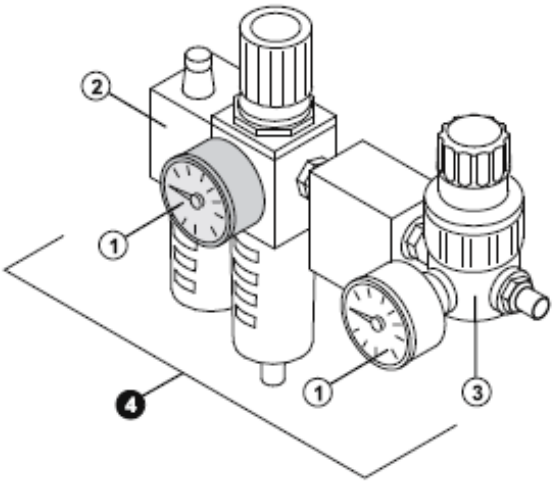

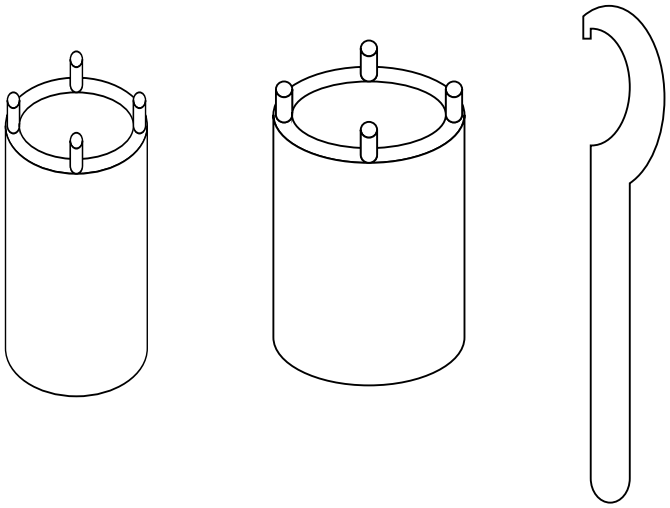

Code	Description
VTNC1	Lower packing tool key VTN
VTSC2	Lower packing tool key VTS
VTNSC3	Upper packing tool key VTN - VTS

AIR MOTOR EXCHANGE VTN/S

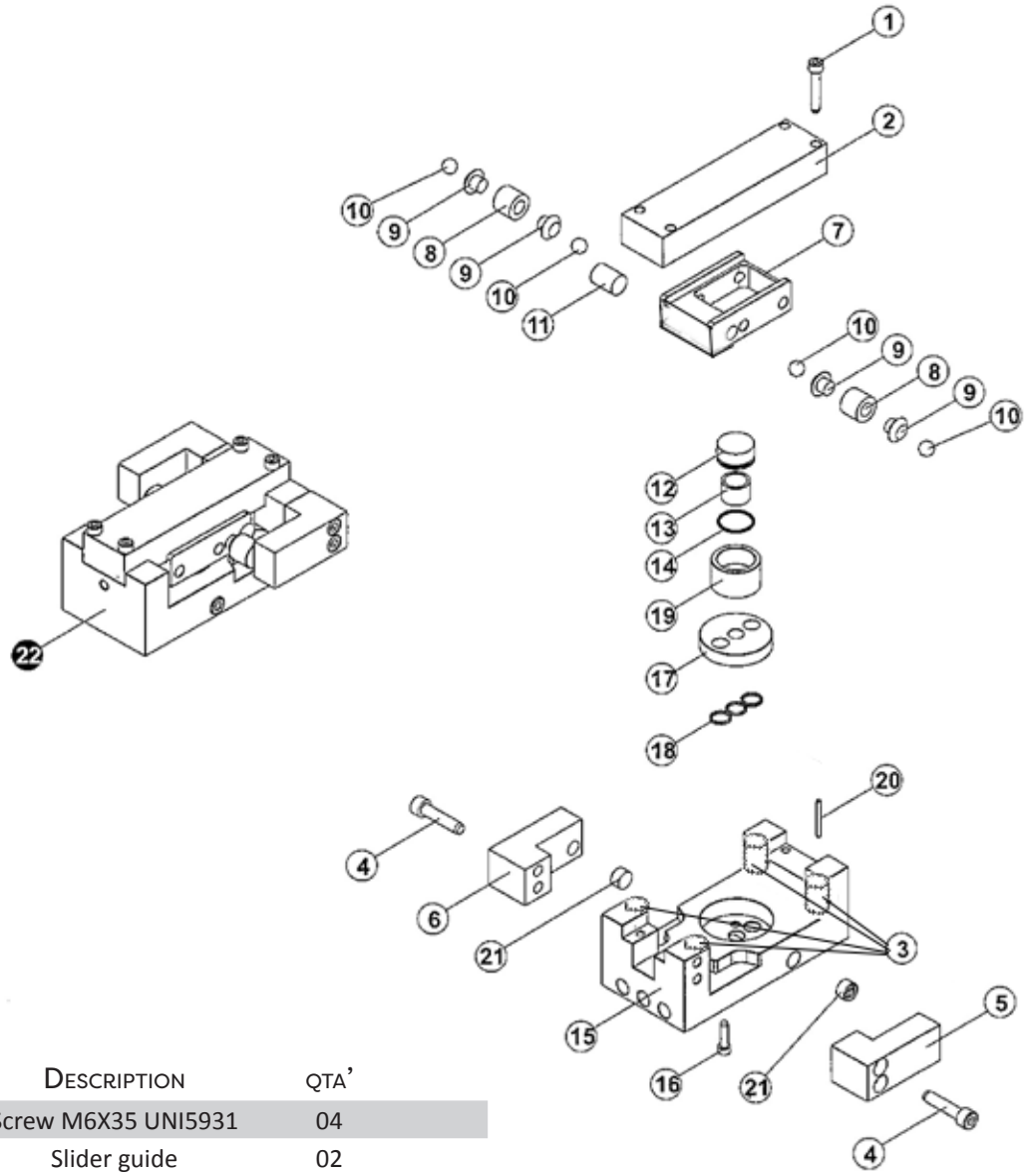

CODE	POS.	DESCRIPTION	QTA'
VTBR635	1	Screw M6X35 UNI5931	04
33118	2	Slider guide	02
30169	3	Upper bumper	01
30169N	3*	Divided upper bumper	01
VTBR835	4	Screw M8X35 UNI5931	04
30163	5	Right support	01
30164	6	Left support	01
30121	7	Slider body	01
33166	8	Spring	02
33165	9	Spring guide	02
490011	10	Ball ø11mm	04
33123	12	Internal slide	01
33126	13	Spring	01
33125	14	Oring 020	01
30119	15	Exchange body	01
VTBR520	16	Screw M5X20 UNI5931	02
30122	17	Body disk	01
3021A	18	Oring 111	03
30124	19	External slide	01
TPM14	21	Conical allen cap 1/4"	02
31111	22	Complete air exchange	01

AIR MOTOR VTN/S

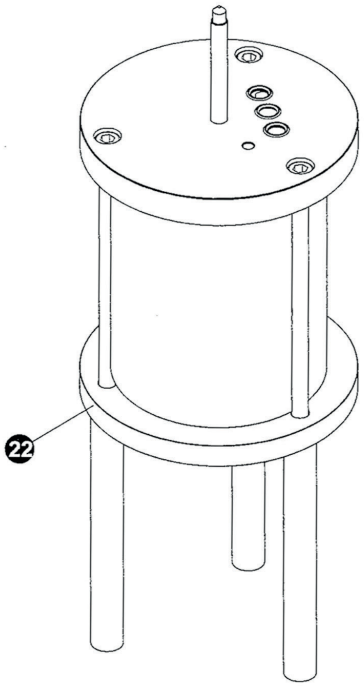

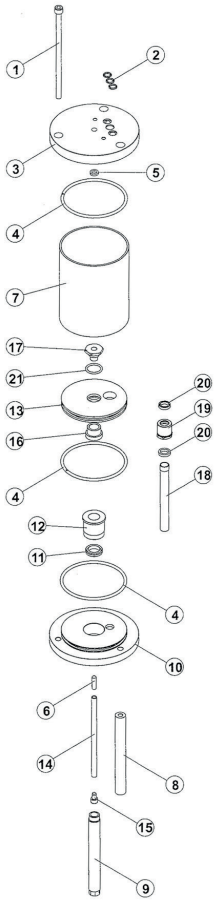

			Models 201 - 321		Model 401		Models 301/S - 010
pos.	Description	qta'	Code		Code	Price	Code
1	Screw M10X200 UNI5931	03	VTBR10200		VTBR10200	**€ 9,90**	VTBR10200
2	Oring 111	03	30185		30185	**€ 1,76**	30185
3	Upper motor flange	01	30101		40101	**€ 176,00**	60101
4	Oring	03	30128		40128	**€ 6,60**	60128
5	Macma 10-16	01	30155		30155	**€ 8,36**	30155
6	Grain M8x30	01	GR830		GR830	**€ 2,20**	GR830
7	Motor cylinder	01	30102		40102	**€ 110,00**	60102
8	Column	03	30104		30104	**€ 15,40**	30104
9	Motor shaft	02	30131		30131	**€ 79,20**	30131
10	Flange	01	30103		40103	**€ 132,00**	60103
11	Macma 22-32	02	30154		30154	**€ 11,00**	30154
12	Motor shaft guide brushing	01	30167		30167	**€ 22,00**	30167
13	Piston	01	30129		40129	**€ 79,20**	60129
14	Slider	01	30166		30166	**€ 22,00**	30166
15	Screw M8X10 UNI5931	01	VTBR810		VTBR810	**€ 0,66**	VTBR810
16	Lower piston support	01	30175		30175	**€ 19,80**	30175
17	Upper piston support	01	30174		30174	**€ 19,80**	30174
18	Internal piston cylinder	01	30173		30173	**€ 61,60**	30173
19	Internal cylinder guide	01	30171		30171	**€ 41,80**	30171
20	Macma 16-22	02	30126		30126	**€ 8,80**	30126
21	O-ring 618	01	30187		30187	**€ 1,32**	30187
22	Complete air motor	01	32222		42222	**€ 924,00**	62222

PUMPING 5:1 FE

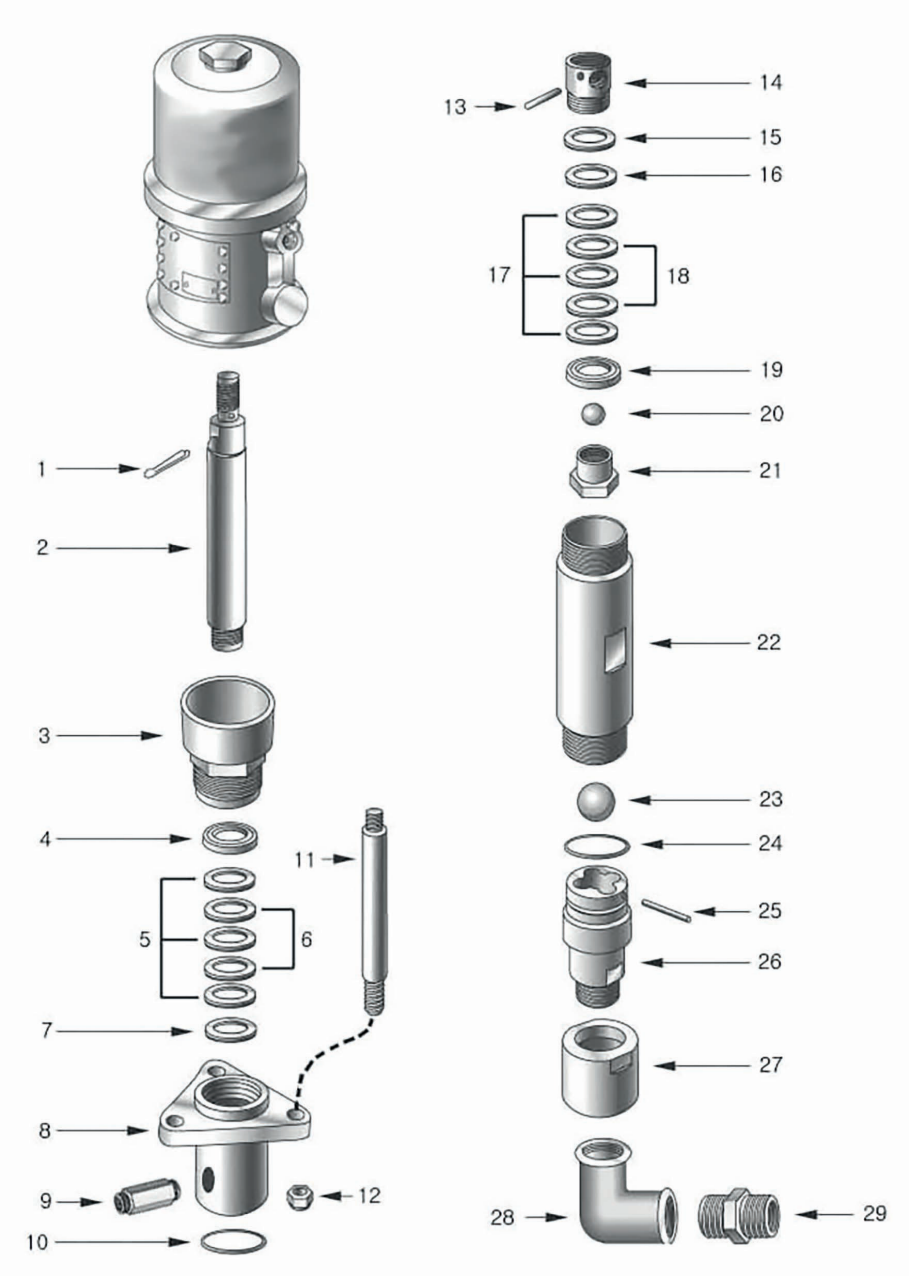

Code	pos.	Description
28202	1	Pin
10202N	2	Motor shaft
10203	3	Support nut
10204	4	Gland F
10205	5	V-Gasket (PE)
10206	6	V-Gasket (PTFE)
10207	7	Gland M
10208	8	Housing
28208	9	Nipple PT 3/8” x PF 3/8”
10210	10	O-ring T
28201	11	Rod
28209	12	Nut (Teflon)
10213	13	Pin
10214	14	Ball seat
10215	15	Washer
10216	16	Gland M

Code	pos.	Description
10217	17	V-Gasket (PE)
10218	18	V-Gasket (PTFE)
10219	19	Gland F
10220	20	Ball
10221	21	Piston seat
10222N	22	Sleeve
10223	23	Ball
10224	24	O-ring
10225	25	Pin
10226	26	Suction valve
10227	27	Intake housing
68108-2	28	Elbow 3/4” x 1”
28222	29	Nipple

AIR MOTOR WIN 281 - PRO 301 FE

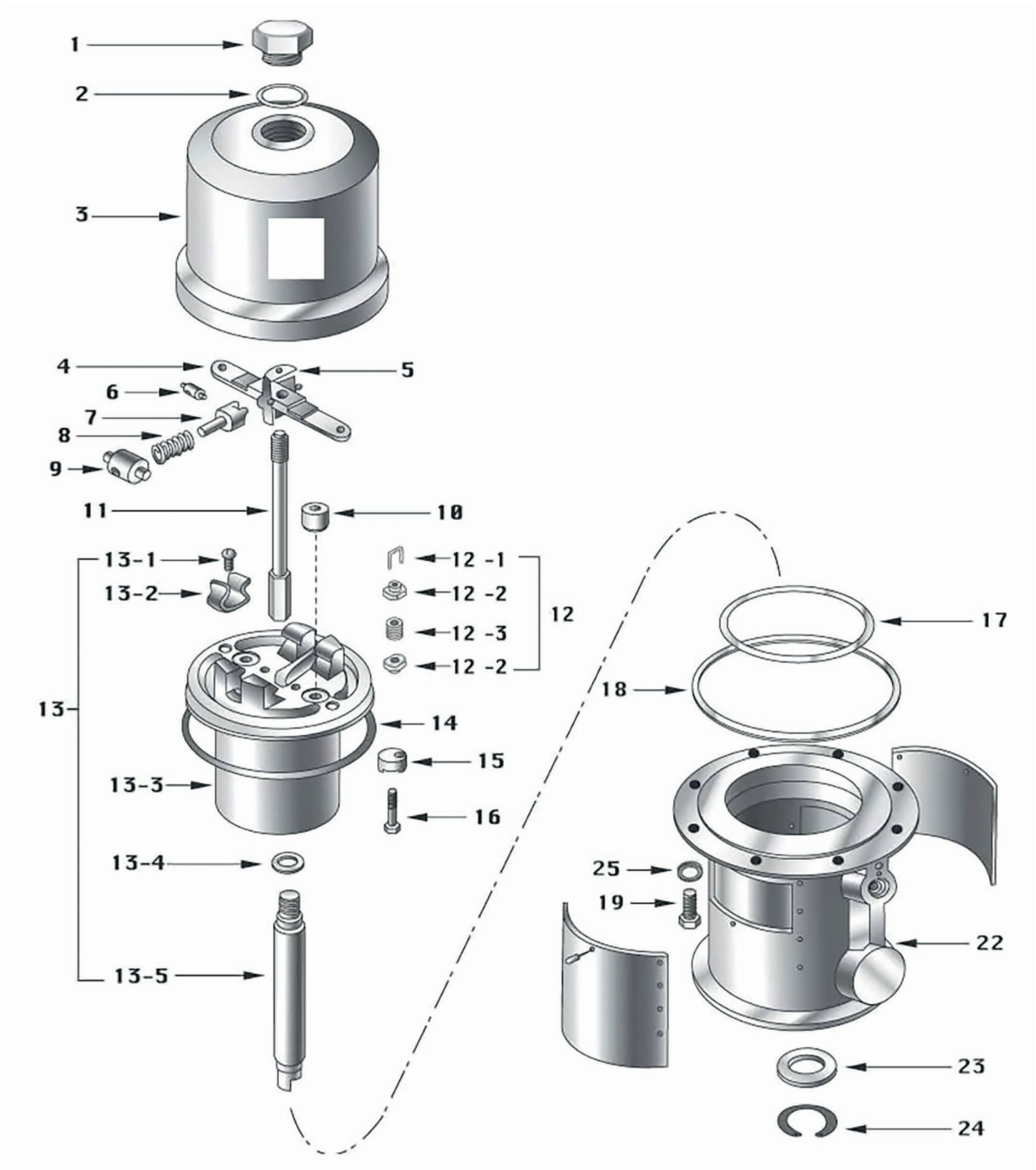

Code	pos.	Description
28101	1	Packing Nut
45127	2	Rubber O-ring
28103	3	Protection
28104-W	4	Actuator
28105	5	Yoke
28106	6	Pin
28107	7	Arm
20108	8	Spring
28109	9	Rocker
28110	10	Shutter
28111	11	Rod
28112-W	12	Lock set
28113	13	Complete piston

Code	pos.	Description
28114	14	Gasket
28115	15	Shutter
28116	16	Screw
28117	17	Gasket
28118	18	Gasket
28119	19	Screw
28122	22	Base
28123	23	Gasket
28124	24	Snap ring
28125	25	Spring gasket

R281100-W	Pneumatic air motor repair kit for 28100-W

PUMPING 28:1

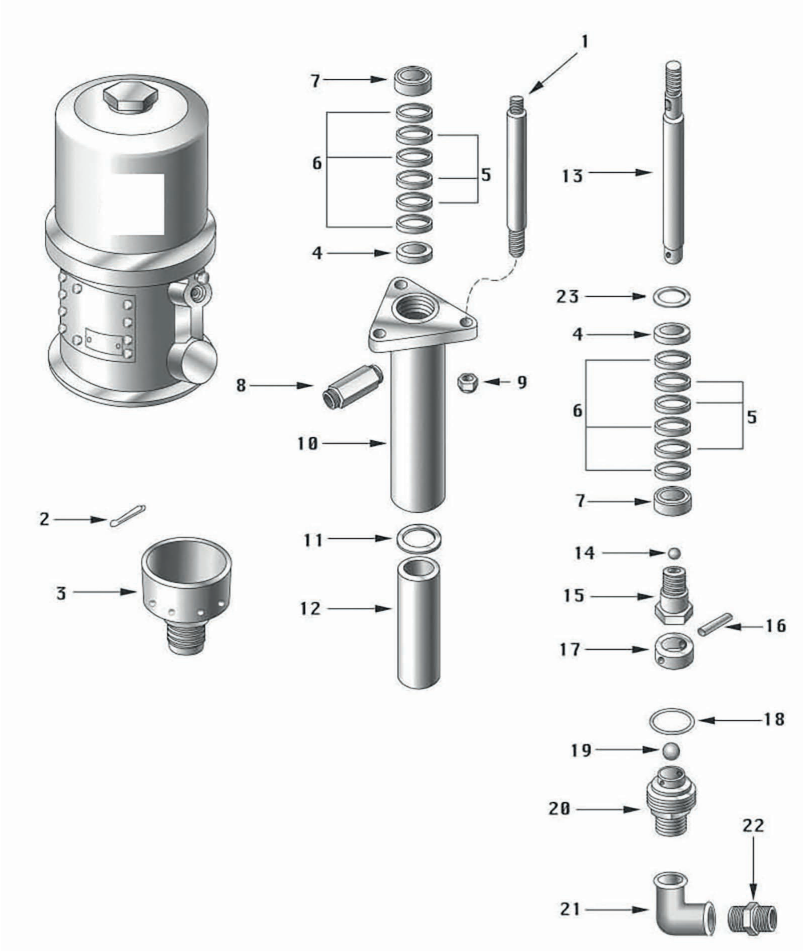

STEEL VERSION

Code	pos.	Description
H28200		Complete pump
28201	1	Tie rod
28202	2	Cotter pin
28203	3	Nut
28204	4	Gland M
28205	5	V-packing (leather)
28206	6	V-packing (teflon)
28207	7	Gland F
28208	8	Nipple PT 3/8” x PF 3/8”
28209	9	Nut (teflon)
28210	10	Housing
28211	11	PTFE gasket
28212N	12	Sleeve
28213N	13	Pump rod
28214	14	Ball 5/16”
28215	15	Piston
28216	16	Pin
28217	17	Spacer
28218	18	O-ring
28219	19	Ball 1/12”
28220	20	Suction valve body
28221	21	Elbow
28222	22	Air Inlet
28223	23	Washer

STAINLESS STEEL VERSION

Code	pos.	Description
H28S200		S. Steel complete pump
28201	1	Tie rod
28202	2	Cotter pin
28203	3	Nut
28204S	4	S. Steel Gland M
28205	5	V-packing (leather)
28206	6	V-packing (PTFE)
28207S	7	S. Steel Gland F
28208S	8	SS air inlet PT 3/8” x PF 3/8”
28209	9	Nut (PTFE)
28210S	10	S. Steel housing
28211	11	PTFE gasket
28212S	12	S. Steel sleeve
28213S	13	S. Steel pump rod
28214S	14	S. Steel ball 5/16”
28215S	15	S.steel Piston
28216S	16	S. Steel pin
28217S	17	S. Steel spacer
28218	18	O-ring
28219S	19	S. Steel ball 1/12”
28220S	20	S. Steel suction valve body
28221S	21	S. Steel elbow
28222S	22	S. Steel air inlet
28223S	23	Washer inox

AIR MOTOR 45:1 / 63:1

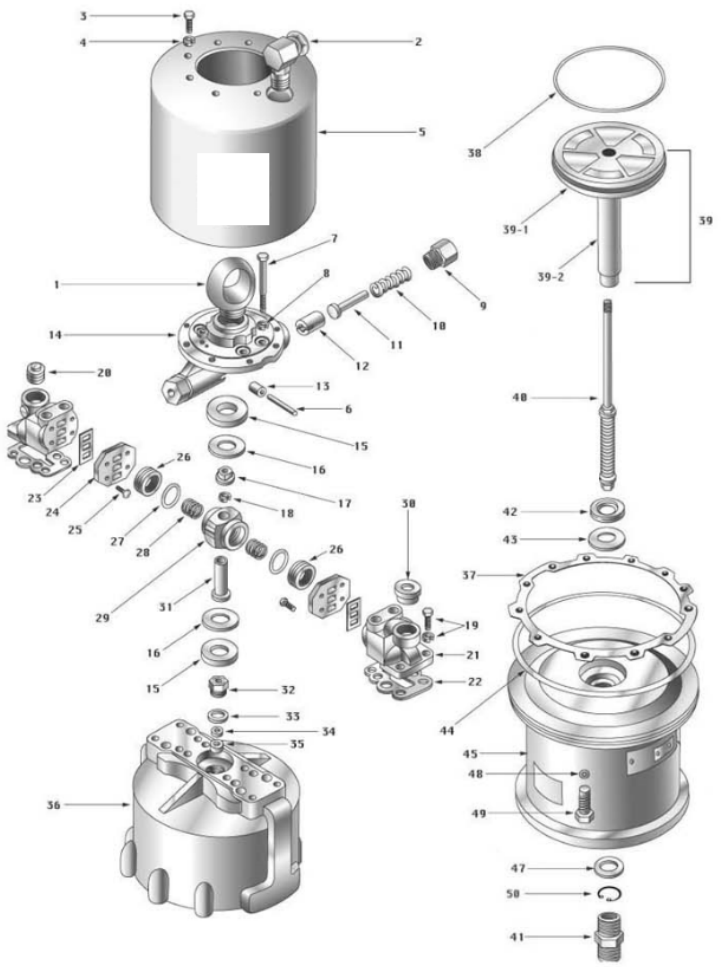

Code	pos.	Description
45101	1	Ground clip
45102	2	Ground clip screw
45103	3	Screw
45104	4	Washer (Spring 1/4”)
45105	5	Shield
45106	6	Axle
45107	7	Screw
45108	8	Lock washer
45109	9	Screw
45110	10	Spring
45111	11	Guide spring detent
45112	12	Plunger
45113	13	Roller
45114	14	Housing
45115	15	Bearing
45116	16	Washer
45117	17	Nut
45118	18	Washer
45119	19	Screw and washer
45120	20	Pipe socket plug 3/4”
45121	21	Manifold
45122	22	Manifold gasket
45123	23	Seat valve plate
45124	24	Plate
G73001	25	Screw

Code	pos.	Description
45126	26	Air valve
45127	27	Rubber o-ring
45128	28	Compression spring
45129	29	Air valve housing
45130	30	Grommet
45131	31	Valve housing hub
45132	32	Bearing trip rod
45133	33	Copper gasket
45134	34	Leather gasket
45135	35	V-packing
45136	36	Air motor Cylinder
45137	37	Cylinder gasket
45138	38	Piston o-ring
45139	39	Piston assembly
45140	40	Trip rod assembly
45141	41	Nipple
45142	42	Rubber o-ring
45143	43	Gasket
45144	44	Rubber o-ring
45145	45	Air motor Base
45147	47	Gasket
45148	48	Washer
45149	49	Screw
45150	50	Snap ring

PUMP 45:1 / 63:1 STEEL

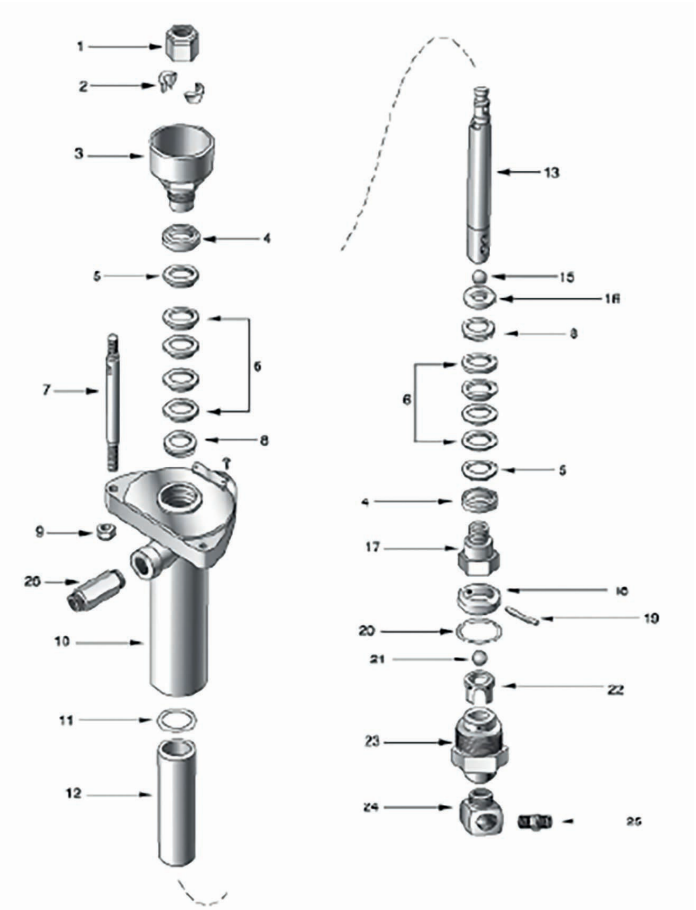

STEEL VERSION 45:1

Code	pos.	Description
H45200		Complete pump
45201	1	Nut
45202	2	Coupling
45203	3	Packing nut
45204	4	Gland F
45205	5	PTFE gasket
45206	6	Leather gasket
45207	7	Tie rod
45208	8	Gland M
45209	9	PTFE nut
45210	10	Housing
45211	11	Gasket
45212	12	Sleeve
45213N	13	Displacement rod
45215	15	Ball 7/8”
45216	16	Washer
45217	17	Ball seat
45218	18	Spacer
45219	19	Pin
45220	20	O-ring
45221	21	Ball 1 1/4”
45222	22	Ball guide
45223	23	Intake housing
45224	24	Distribution
45225	25	Nipple 1” x 1”
45226	26	Nipple 1” x 3/4”

STEEL VERSION 63:1

Code	pos.	Description
H63200		Complete pump
45201	1	Nut
45202	2	Coupling
63203	3	Packing nut
63204	4	Gland F
63205	5	PTFE Gasket
63206	6	Leather
45207	7	Tie rod
63208	8	Gland M
45209	9	PTFE nut
63210	10	Housing
63211	11	Gasket
63212N	12	Sleeve
63213N	13	Displacement rod
45215	15	Ball 7/8”
63216	16	Washer
63217	17	Ball seat
63218	18	Spacer
63219	19	Pin
63220	20	O-ring
45221	21	Ball 1 1/4”
63222	22	Ball guide
63223	23	Intake housing
45224	24	Distribution
45225	25	Nipple 1” x 1”
45226	26	Nipple 1” x 3/4”

PUMP 45:1 S. STEEL

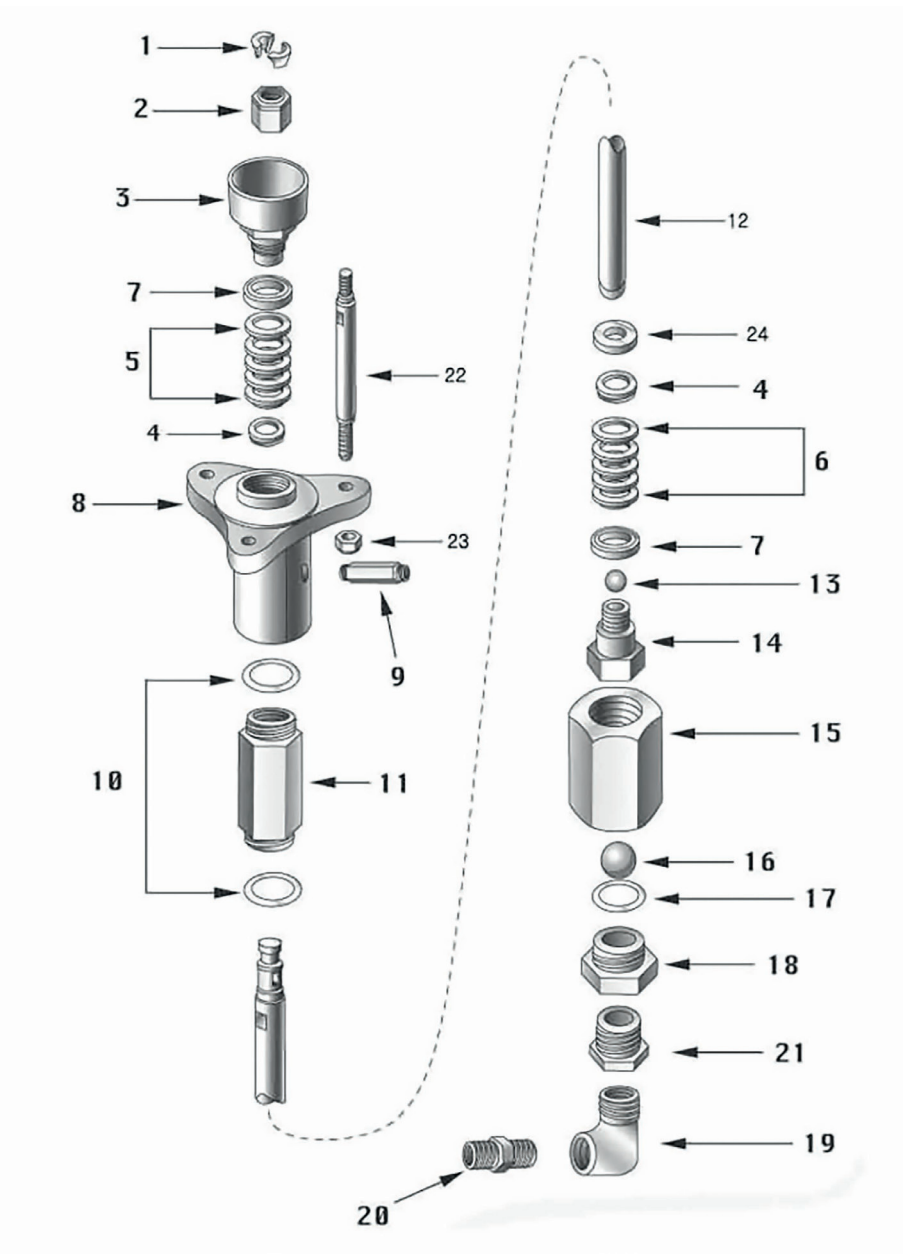

Code	pos.	Description
H45S200		S. steel complete pump
45202	1	Coupling
45201	2	Nut
45203	3	Packing nut
45S204S	4	Gland M
45205	5-6	PTFE gasket
45S207S	7	Gland F
45S208S	8	Housing
45S209S	9	Nipple 3/4 x 3/4
72210	10	PTFE O-ring
45S211S	11	Sleeve
45S212S	12	Piston rod
45S213S	13	Ball 7/8”

Code	pos.	Description
45S214S	14	Ball seat
45S215S	15	Intake seat
45S216S	16	Ball 1 1/4”
68210	17	PTFE gasket
45S218S	18	Intake valve
45S219S	19	Elbow
45S220S	20	Nipple
45S221S	21	Reduction
45207	22	Tie rod
45209	23	Teflon nut
45S224S	24	Washer

PUMP 63:1 S. STEEL

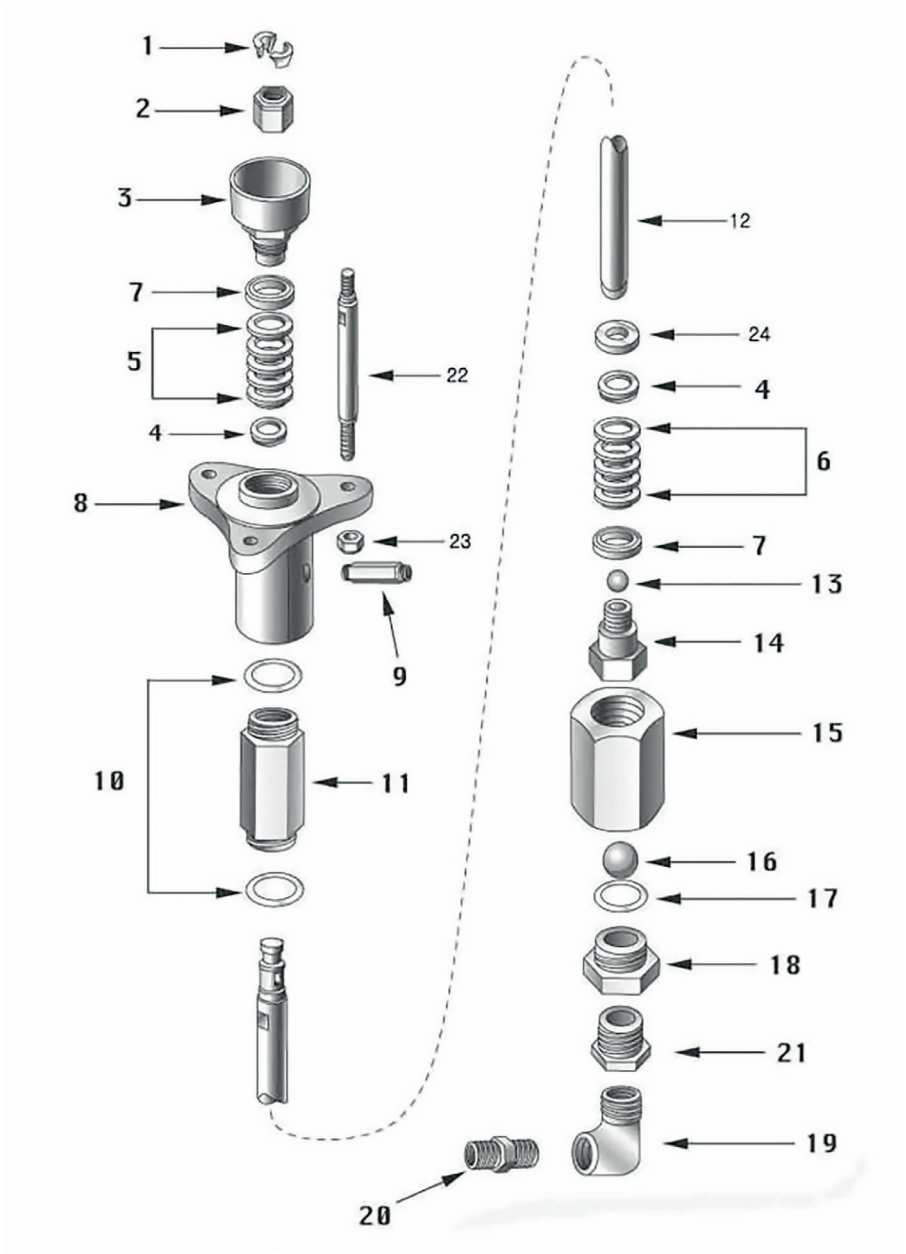

Code	pos.	Description
H63S200		S. steel complete pump
45202	1	Coupling
45201	2	Nut
45203	3	Packing nut
63S204S	4	S. steel gland M
63205	5-6	PTFE gasket
63S207S	7	S. steel gland F
45S208S	8	Housing
45S209S	9	Nipple 3/4 x 3/4
72210	10	PTFE O-ring
45S211S	11	S. steel sleeve
45S212S	12	S. steel piston rod
45S213S	13	S. steel ball 7/8”

Code	pos.	Description
45S214S	14	S. steel ball seat
45S215S	15	S. steel intake seat
45S216S	16	S. steel ball 1 1/4”
68210	17	PTFE gasket
45S218S	18	S. steel intake valve
45S219S	19	S. steel elbow
45S220S	20	S. steel nipple
45S221S	21	S. steel reduction
45207	22	Tie rod
45209	23	Teflon nut
63S224S	24	S. steel washer

AIR MOTOR 68:1

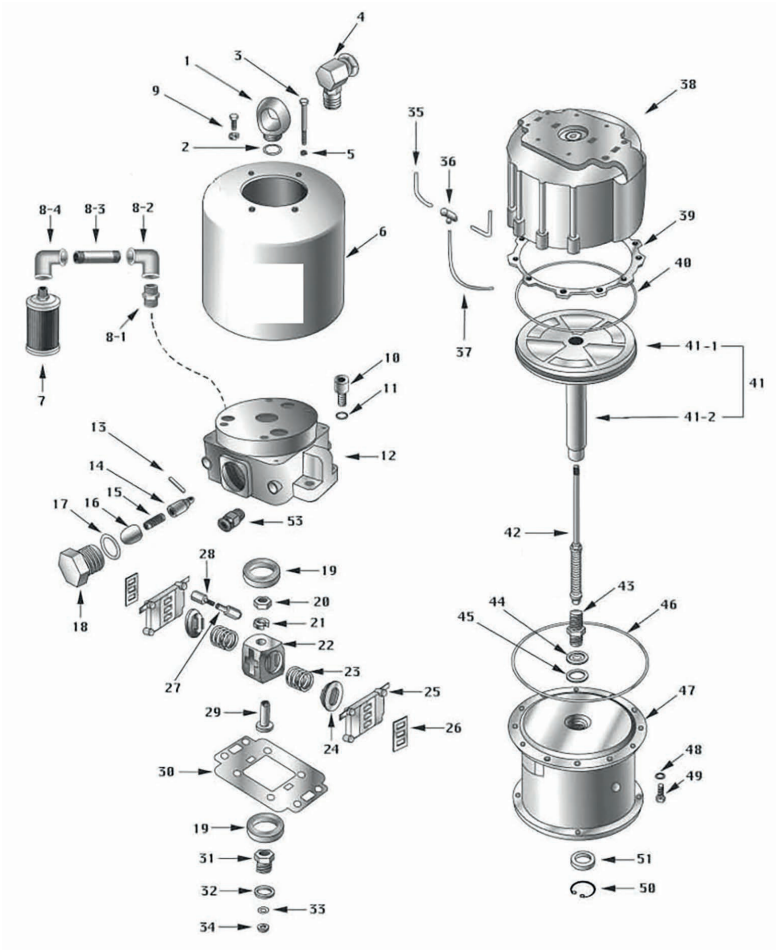

Code	pos.	Description
68101	1	Pin
68102	2	O-ring
68103	3	Screw
45102	4	Elbow fitting
68105	5	Washer
68106	6	Shield
68107	7	Silencer
68108	8	Silencer connector set
68109	9	Screw and washer
68110	10	Screw
68111	11	Washer
68112	12	Seat
68113	13	Pin
68114	14	Spring seat
68115	15	Spring
68116	16	Guide
68117	17	O-ring
68118	18	Cap
68119	19	Ring
68120	20	Nut
68121	21	Washer
68122	22	Valve seat
68123	23	Spring
68124	24	Valve
68125	25	Support
45123	26	Gasket

Code	pos.	Description
68127	27	Nut
68128	28	Screw
68129	29	Hub
68130	30	Gasket
68131	31	Bearing
45133	32	Copper gasket
45134	33	Leather gasket
68134	34	V-Packing
68135	35	Hose 4x6
68136	36	T-fitting
68137	37	Hose 4x6
68138	38	Cylinder
45137	39	Rubber gasket
45138	40	O-ring piston
45139	41	Complete piston
68142	42	Piston rod set
68143	43	Fitting
45142	44	U Gasket
45143	45	Gasket
45144	46	Rubber o-ring
45145	47	Air motor base
45148	48	Washer
45149	49	Screw
45150	50	Snap ring
45147	51	Gasket
68153	53	Rapid fitting

PUMP 68:1

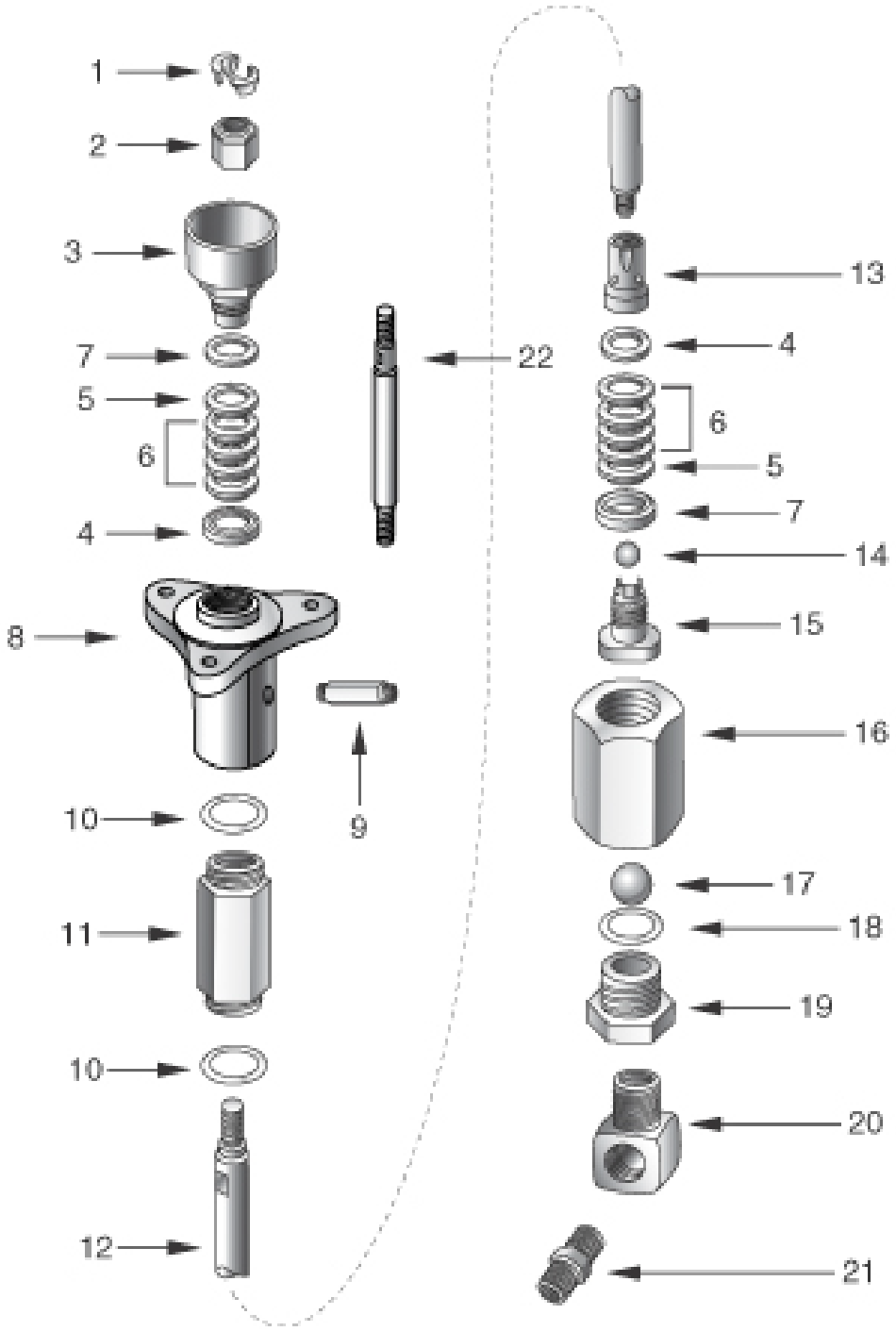

Code	pos.	Description
H68200		Steel pump complete
45202	1	Coupling
45201	2	Nut
68203	3	Locking ring
68204	4	Gland M
68205	5+6	PTFE packing
68207	7	Gland F
68208	8	Pump housing
68209	9	Nipplo 3/4 x 3/4
68210	10	Teflon gasket

Code	pos.	Description
68211N	11	Sleeve
68212N	12	Piston rod
68213	13	Seat
68214	14	Ball 19mm
68215	15	Ball seat
68216	16	Intake housing
45221	17	Ball 1 1/4”
68210	18	PTFE gasket
68219	19	Suction valve
45224-A	20	Bushing
68223	21	Nipple

PUMP 68:1 STAINLESS STEEL

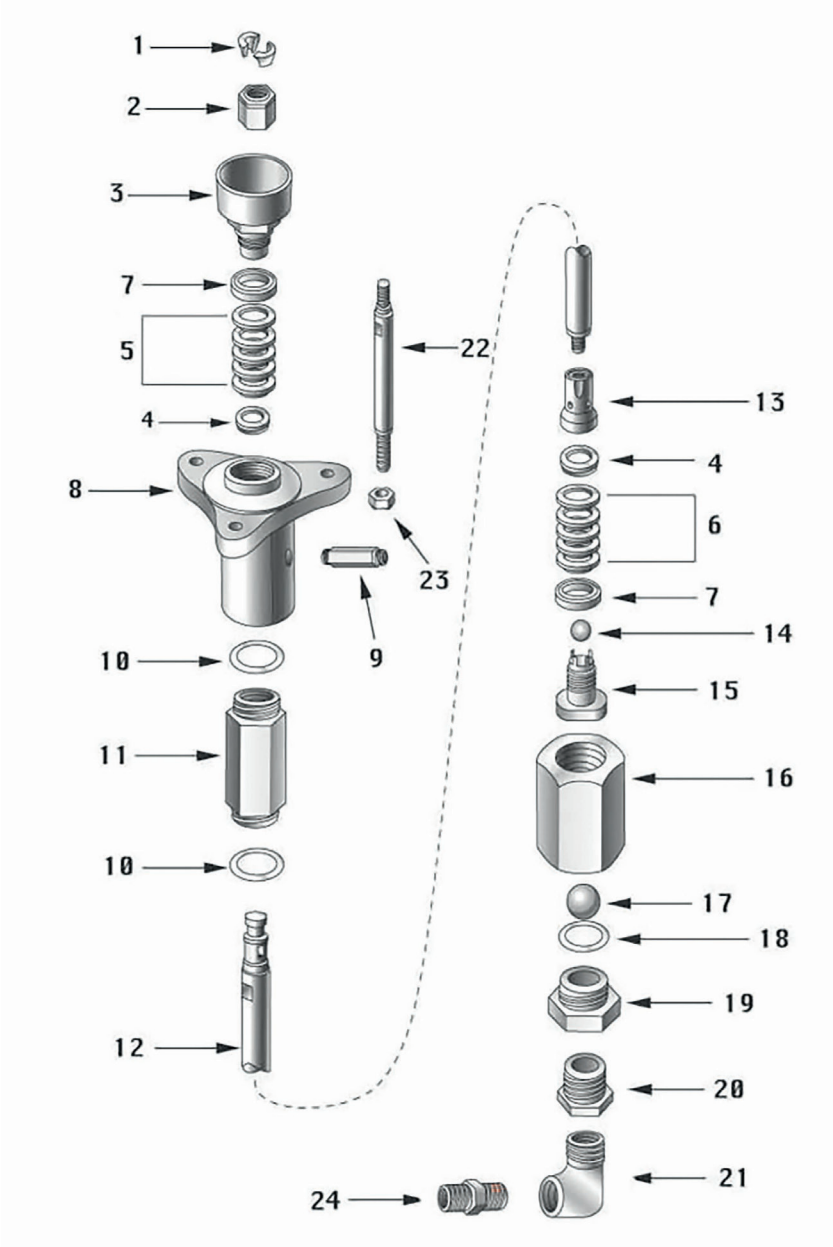

Code	pos.	Description
H68S200		S. Steel pump complete
45202	1	Coupling
45201	2	Nut
68203	3	Locking ring
68S204S	4	Gland M
68205	5	PTFE packing
68205	6	PTFE packing
68S207S	7	Gland F
68S208S	8	Pump housing
68S209S	9	Nipplo 3/4 x 3/4
68210	10	Teflon gasket
68S211S	11	Sleeve
68S212S	12	Piston rod
68S213S	13	Seat

Code	pos.	Description
68S214S	14	Ball 19mm
68S215S	15	Ball seat
68S216S	16	Intake housing
45S216S	17	Ball 1 1/4”
68210	18	PTFE gasket
45S218S	19	Suction valve
45S221S	20	Bushing
45S219S	21	Elbow
68222	22	Tie Rod
68223	23	Teflon nut
45S220S	24	Nipple

AIR MOTOR 56:1 / 73:1

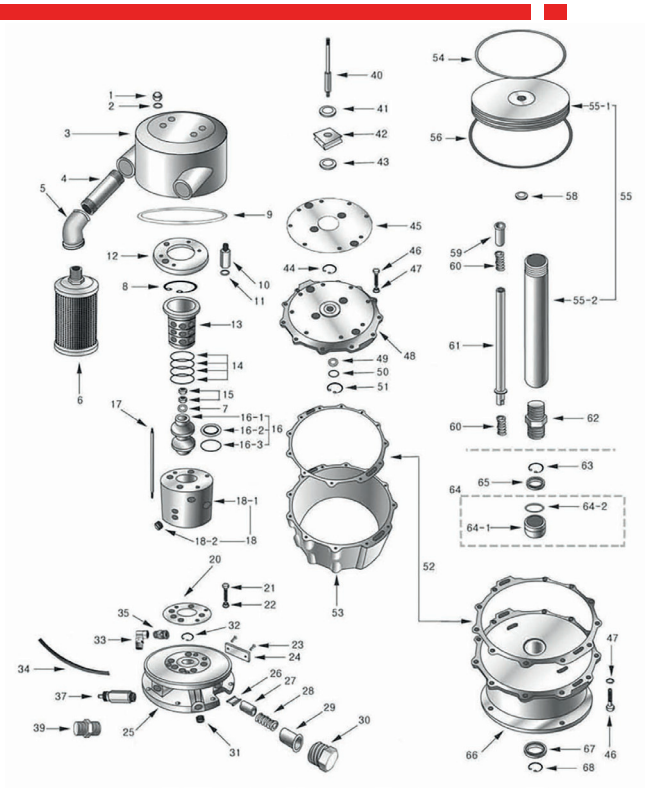

Code	pos.	Description
72101	1	Cap
72102	2	Washer
72103-A	3	Shield
68108-3	4	Pipe
45505	5	Elbow
68107	6	Silencer
A70002	7	Washer
A70003	8	Seager
72109-A	9	O-ring
72110	10	Nut
72111	11	Washer
72112	12	Cover plate
72113	13	Control cylinder
72114	14	O-ring
72115	15	Nut
72116	16	Spool assembly
72117	17	Stud bolt
72118	18	Housing set
72120	20	Gasket
72121	21	Screw
45607-1	22	Washer
17126	23	Screw
72124	24	Plate
72125	25	Manifold
72126	26	Toggle joint
72127	27	Bearing
72128	28	Spring
72129	29	Cylinder
72130	30	Cap
72131	31	Nut
72132	32	Seager
72133	33	Fitting

Code	pos.	Description
72134	34	PU hose
68153	35	Nipple
A70040	37	Air safety valve
G74002	38	Nipple
45225	39	Nipple
72140	40	Control axle
72151	41	A Gasket
72142	42	Guide
72143	43	B Gasket
72144	44	Seager
72145-A	45	Gasket
68110	46	Screw
68111	47	Lock washer
72148	48	Cylinder cover
72149	49	U Gasket
72150	50	Gasket
72132	51	Seager
72152	52	Gasket
72153	53	Cylinder
72154	54	O-ring
72155	55	Complete PIston
72156	56	O-ring piston
72158	58	Spacer
72159	59	Spring Guide
72160	60	Spring
72161C	61	Rod
72162	62	Fitting
72163	63	Seager
72164	64	Guide bush assembly
72165	65	U Gasket
72166	66	Base
45147	67	Gasket

PUMP 56:1 / 73:1 STEEL

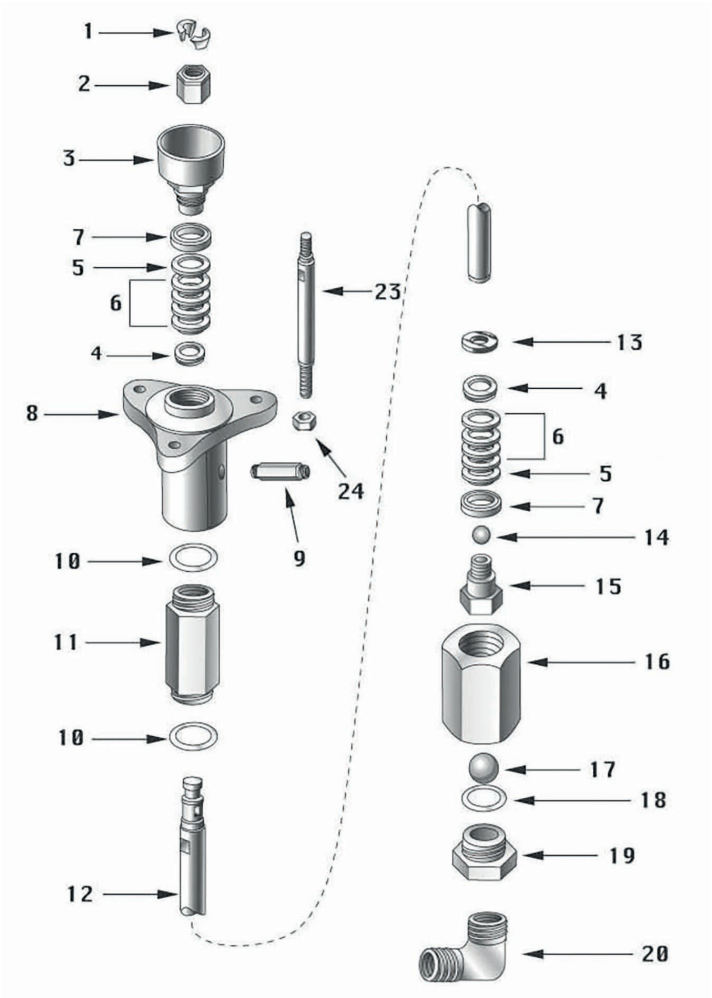

STEEL VERSION 56:1

Code	pos.	Description
H45D200		Complete pump
45202	1	Nut
45201	2	Coupling
45203	3	Locking ring
45208	4	Gland M
45205	5	PTFE Gasket
45206	6	Leather Gasket
45204	7	Gland F
72208-45D	8	Pump housing
68209	9	Nipple 3/4” x 3/4”
72210	10	PTFE O-ring
72211N-45D	11	Sleeve
45213N	12	Piston rod
45216	13	Washer
45215	14	Ball 7/8”
45217	15	Ball seat
72216	16	Intake housing
45221	17	Ball 1 1/4”
68210	18	PTFE Gasket
68219	19	Intake valve
45224-A	20	Elbow
72223	23	Tie rod
45209	24	Nut in teflon

STEEL VERSION 73:1

Code	pos.	Description
H63D200		Complete pump
45202	1	Nut
45201	2	Coupling
63203	3	Locking ring
63208	4	Gland M
63205	5	PTFE Gasket
63206	6	Leather Gasket
63204	7	Gland F
72208	8	Pump housing
68209	9	Nipple 3/4” x 3/4”
72210	10	PTFE O-ring
72211N	11	Sleeve
63213N	12	Piston rod
63216	13	Washer
45215	14	Ball 7/8”
63217	15	Ball seat
72216	16	Intake housing
45221	17	Ball 1 1/4”
68210	18	PTFE Gasket
68219	19	Intake valve
45224-A	20	Elbow
72223	23	Tie rod
45209	24	Teflon nut

LUNG PMX 8/30

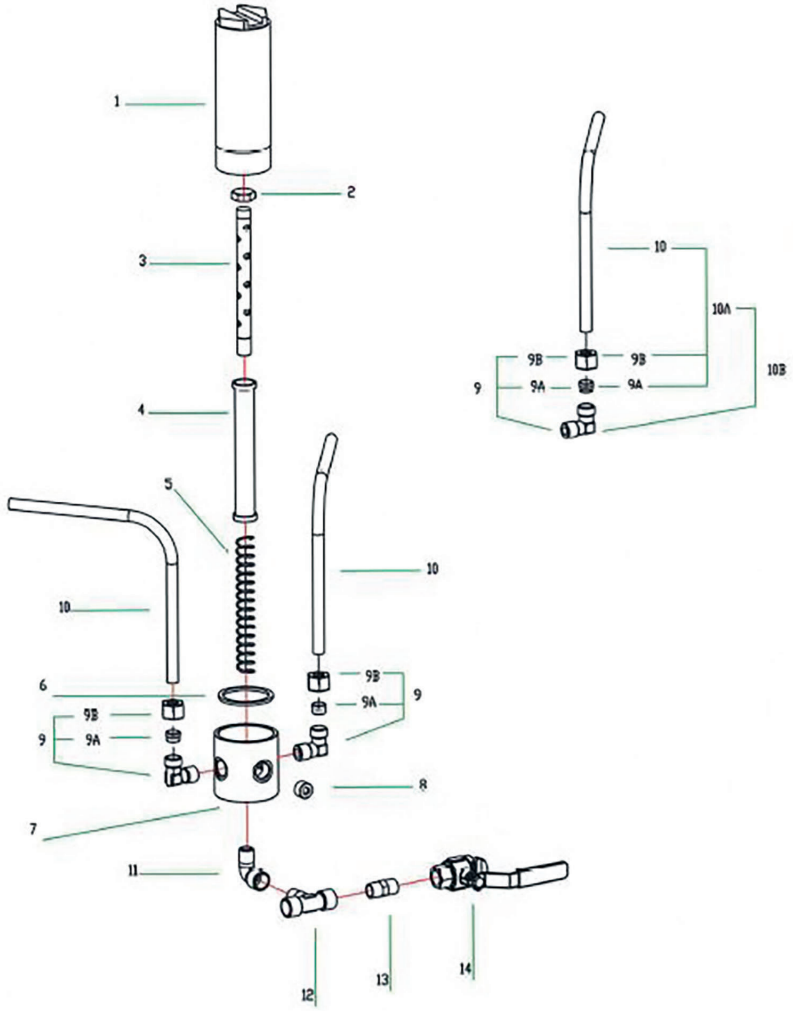

STAINLESS STEEL VERSION

CODE	POS.	DESCRIPTION
VS9PTCAR160001	1	Lung reservoir Ø60
VS9PTRAC379392	2	Cap F 3/8"
VS9PTCAR100011	3	Lung filter core
VS9PTCAR10001R	3A	Complete lung filter core
VS9PTCAR310060	4	Lung filter 60-100-150-200 mesh
VS9PTCAR100020	5	Lung filter spring
VS9PTMOT400200	6	Gasket for Lung Ø60
VS9PTCAR169001	7	Case Back SOMEBODY 69 mm
VS9PTRAC379369	8	Cap without head G 3/8"
VS9PTRAC361235	9	TN 94 3/8" tube 12
VS9PTRAC271290	9A	End cap for tube 12
VS9PTRAC361236	9B	Nut 3/8" for tube
VS9PTCAR320020	10	Tube 12x1,5
VS9PTCAR32001R	10A	Tubular. with ogives
VS9PTCAR32005R	10B	Hose. 12x1,5 with connection
VS9PTRAC339331	11	Connection 90# M/F 3/8"
VS9PTRAC349331	12	T connection M/FF 3/8"
VS9PTRAC309337	13	Nipple MM 3/8"
VS9PTRAC499333	14	3/8" lever valve

ALUMINIUM VERSION

CODE	POS.	DESCRIPTION
VS9PTCAR160001	1	Lung reservoir Ø 60
VS9PTRAC379392	2	Cap F 3/8"
VS9PTCAR100011	3	Lung filter core
VS9PTCAR10001R	3A	Complete lung filter core
VS9PTCAR310060	4	Lung filter 60-100-150-200 mesh
VS9PTCAR100020	5	Lung filter spring
VS9PTMOT400200	6	Gasket
VS9PTCAR169001	7	Case Back Ø 69 mm
VS9PTRAC379369	8	Cap without head 3/8"
VS9PTRAC361235	9	TN 94 3/8" tube 12
VS9PTRAC271290	9A	End cap for tube 12
VS9PTRAC361236	9B	Nut 3/8" tube 12
VS9PTCAR320020	10	Tube 12x1,5
VS9PTCAR32001R	10A	Tubular. with ogives
VS9PTCAR32005R	10B	Hose. with hose connection
VS9PTRAC339331	11	Fitting 90 layer MM 3/8" conical-cylindrical
VS9PTRAC349331	12	FFF 3/8 T connection
VS9PTRAC309337	13	Reduced nipple 3/8" -1/4" MM
VS9PTRAC499333	14	Ball valve 2 ways 1/4"

MATERIAL ON REQUEST

LUNG PMX 18/30

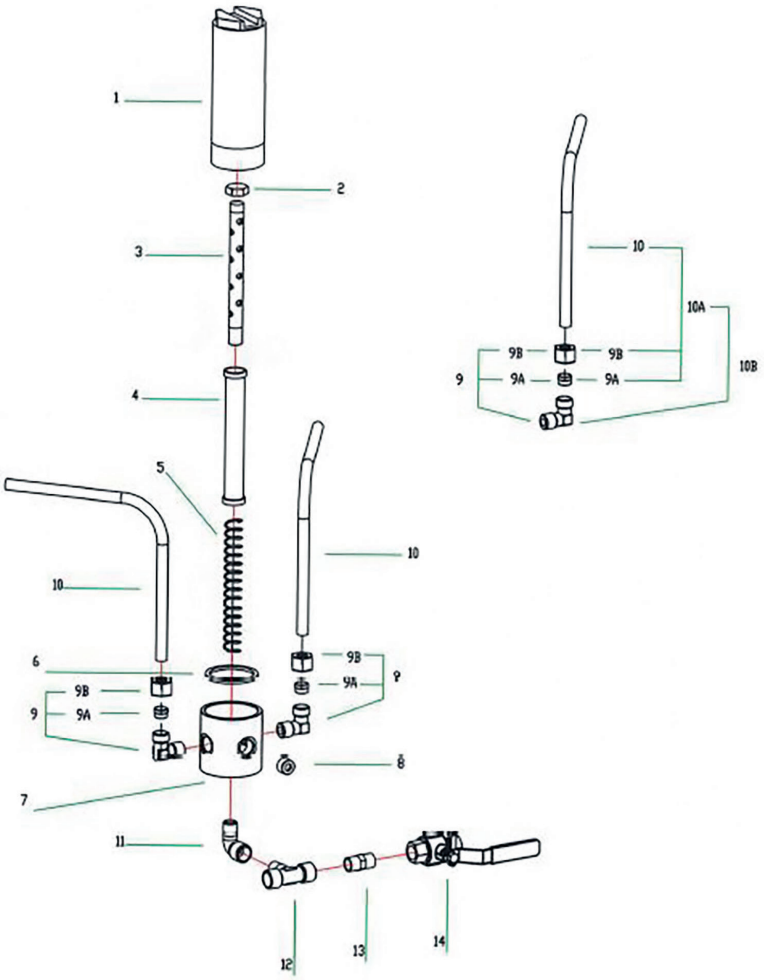

STAINLESS STEEL VERSION

CODE	POS.	DESCRIPTION
VS9PTCAR160001	1	Lung reservoir Ø60
VS9PTRAC379392	2	Cap F 3/8"
VS9PTCAR100011	3	Lung filter core
VS9PTCAR10001R	3A	Complete lung filter core
VS9PTCAR310060	4	Lung filter 60-100-150-200 mesh
VS9PTCAR100020	5	Lung filter spring
VS9PTMOT400200	6	Gasket for Lung Ø60
VS9PTCAR169001	7	Case Back SOMEBODY 69 mm
VS9PTRAC379369	8	Cap without head G 3/8"
VS9PTRAC361235	9	TN 94 3/8" tube 12
VS9PTRAC271290	9A	End cap for tube 12
VS9PTRAC361236	9B	Nut 3/8" for tube
VS9PTCAR320020	10	Tube 12x1,5
VS9PTCAR32001R	10A	Tubular. with ogives
VS9PTCAR32005R	10B	Hose. 12x1,5 with connection
VS9PTRAC339331	11	Connection 90# M/F 3/8"
VS9PTRAC349331	12	T connection M/FF 3/8"
VS9PTRAC309337	13	Nipple MM 3/8"
VS9PTRAC499333	14	3/8" lever valve

ALUMINIUM VERSION

CODE	POS.	DESCRIPTION
VS9PTCAR160001	1	Lung reservoir Ø 60
VS9PTRAC379392	2	Cap F 3/8"
VS9PTCAR100011	3	Lung filter core
VS9PTCAR10001R	3A	Complete lung filter core
VS9PTCAR310060	4	Lung filter 60-100-150-200 mesh
VS9PTCAR100020	5	Lung filter spring
VS9PTMOT400200	6	Gasket
VS9PTCAR169001	7	Case Back Ø 69 mm
VS9PTRAC379369	8	Cap without head 3/8"
VS9PTRAC361235	9	TN 94 3/8" tube 12
VS9PTRAC271290	9A	End cap for tube 12
VS9PTRAC361236	9B	Nut 3/8" tube 12
VS9PTCAR320020	10	Tube 12x1,5
VS9PTCAR32001R	10A	Tubular. with ogives
VS9PTCAR32005R	10B	Hose. with hose connection
VS9PTRAC339331	11	Fitting 90 layer MM 3/8" conical-cylindrical
VS9PTRAC349331	12	FFF 3/8 T connection
VS9PTRAC309337	13	Reduced nipple 3/8" -1/4" MM
VS9PTRAC499333	14	Ball valve 2 ways 1/4"

MATERIAL ON REQUEST

POMPA PMX 8/30 A SOFFIETTO

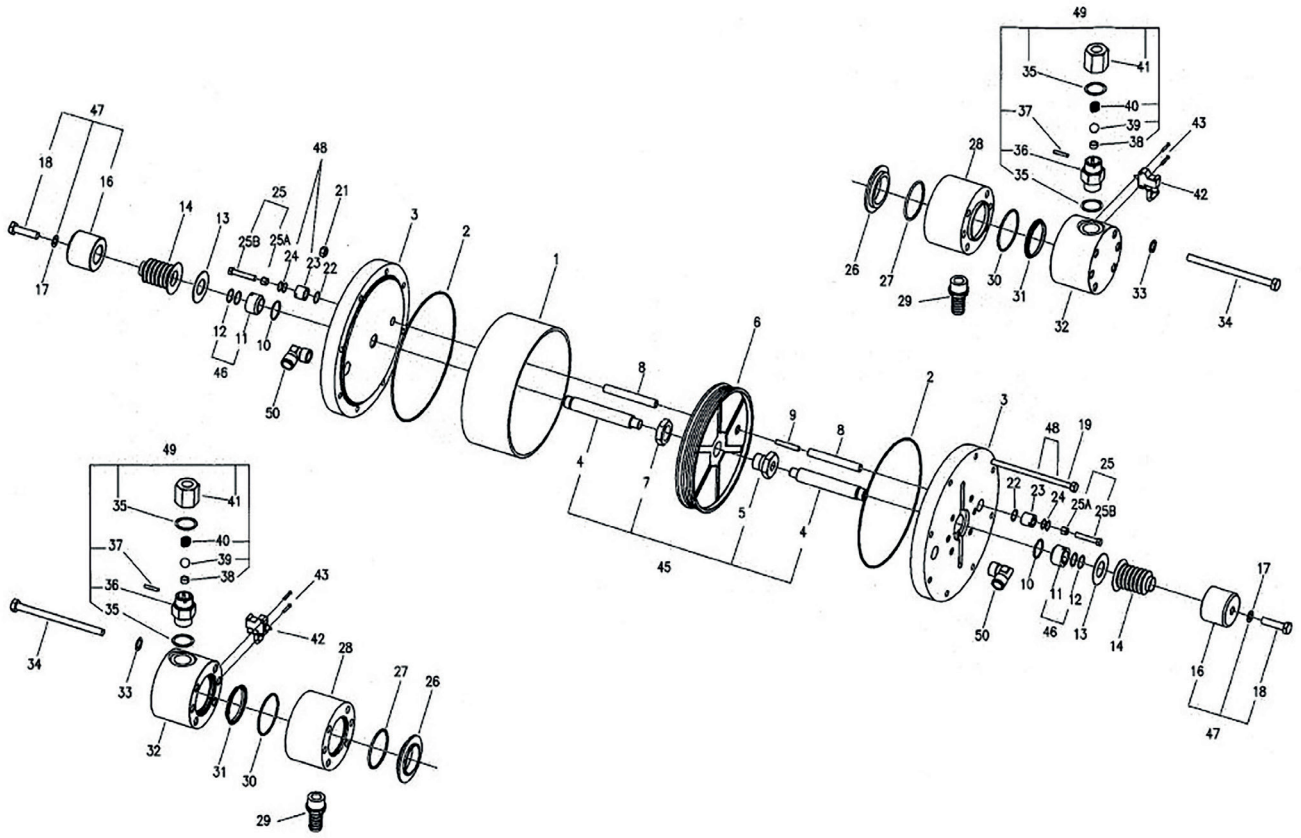

CODE	POS.	DESCRIPTION
VS9PTMOT120010	1	Pneumatic cylinder 200
VS9PT0RI03800N	2	O-ring flange
VS9PTMOT120100	3	Flange motor 200
VS9PTMOT200110	4*	Chrome-plated semi-shaft SOMEBODY 20
VS9PTMOT201300	5*	Nut e.g. semi-shaft fixing
VS9PTMOT120020	6	Cylinder plate
VS9PTMOT201310	7*	Nut for nut semi-shaft
VS9PTMOT200200	8	Chromed stem
VS9PTVIT408030	9	Grain M8x30
VS9PT0RI02106N	10	O-ring sealing bushing shaft guide
VS9PTMOT202110	11*	Bushing semi-shaft SOMEBODY 20
VS9PTORI04081V	12	O-ring bushing shaft guide
VS9PTMOT500010	13	Washer premisoff. Somebody 51x1,6 mm
VS9PTMOT900003	14	Bellows d.i. 18 turned
VS9PTMOT346001	16*	Piston SOMEBODY 46 ceramic
VS9PTVIT708017	17*	Copper rosettes 10,5x20x2 M10
VS9PTVIT110040	18*	TE A2 M10X40 stainless steel screw
VS9PTVIT008140	19	TE 8.8 M8X140 galvanized screw
VS9PTVIT008150	20	TE 8.8 M8X150 galvanized screw
VS9PTVIT808008	21	Zinc plated nut and M8 class
VS9PTORI02056N	22	O-ring sealing bushing rod guide
VS9PTMOT202210	23*	Stem guide bushing 12mm M20x1,5
VS9PTORI00115N	24*	O-ring stem guide bushing
VS9PTVIT08358R	25	Stem log
VS9PTVIT8008020	25B*	TE 8.8 M8x20 galvanized screw

CODE	POS.	DESCRIPTION
VS9PTMOPT500110	26	Pre-outlet flange
VS9PTORI03237E	27	O-ring intermediate body
VS9PTMOT546100	28	Intake hub
VS9PTRAC500050	29	3/4" nylon rubber holder hose 20
VS9PTORI00161E	30	O-ring pump body
VS9PTMOT446000	31	Lip seal
VS9PTMOT546110	32	Pump hub
VS9PTVIT610021	33	TE 140HV rosettes 10,5x21xM10 galvanized
VS9PTVIT010160	34	TE 8.8 M10x160 galvanized screw
VS9PTVIT727033	35*	Copper rosettes 27x33x1.5 3/4"
VS9PTMOT605010	36*	Single body valve
VS9PTMOT601410	37*	Valve plug
VS9PTMOT601110	38*	Seat widia Ģ17x30 somebody
VS9PTMOT601210	39*	Sfeda for valve 15mm
VS9PTMOT601300	40*	Valve spring
VS9PTMOT600210	41*	Valve cap
VS9PTPNE029000	42	Small limit switch
VS9PTVIT504025	43	Screw TCB+4.8 M4x25 galvanized
VS9PTCAR210050	44	Relay limit switch cover
VS9PTMOT20011R	45	Tree
VS9PTMOT20211R	46	Bushing for shaft guide Ø20
VS9PTMOT34600R	47	Full piston ceramic Ø 46
VS9PTMOT20221R	48	Stem guide bushing
VS9PTMOT69001R	49	Valve
VS9PTRAC161520	50	Fitting 90 laying 1/2" tube 15
9PTKITPM2000		Pneumatic kit 200
9PTKITI00036		Hydraulic kit 36

POMPA PMX 18/30 A SOFFIETTO

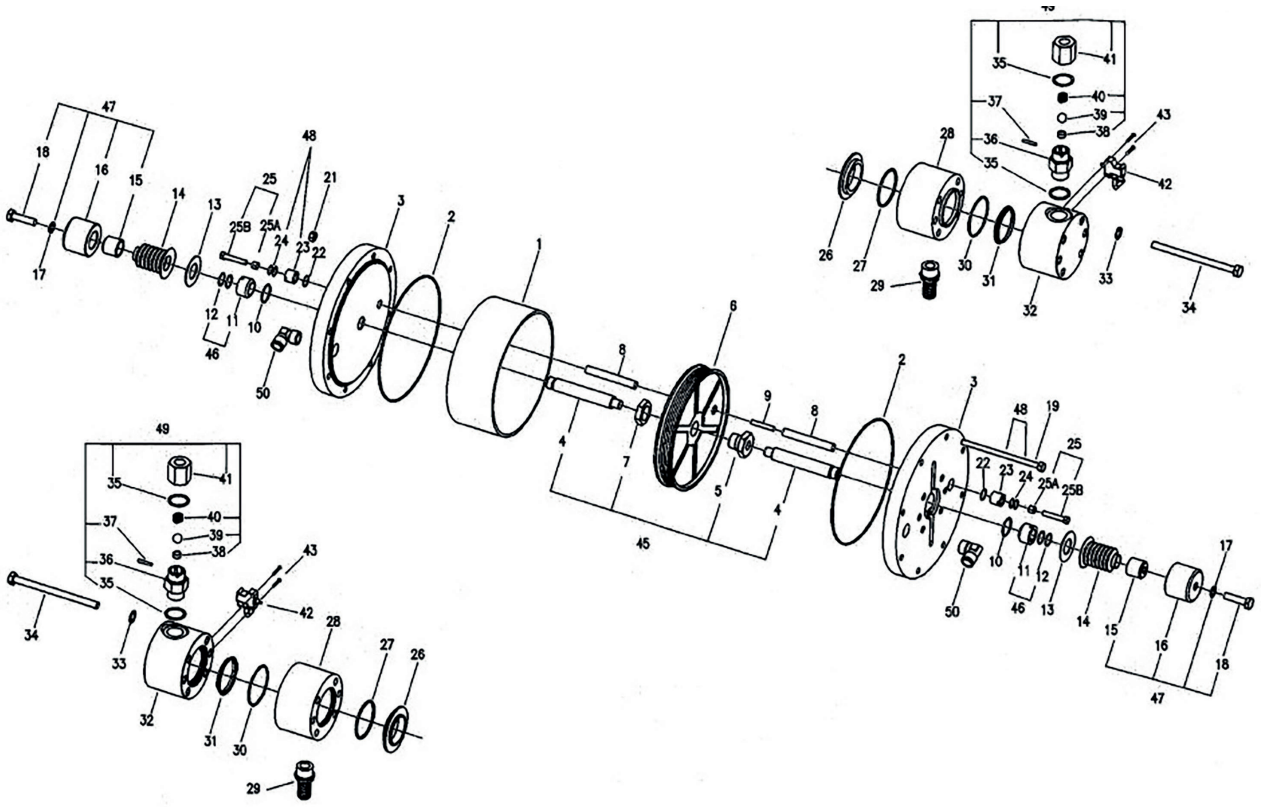

CODE	POS.	DESCRIPTION
VS9PTMOT120010	1	Pneumatic cylinder 200
VS9PT0RI03800N	2	O-ring flange
VS9PTMOT120100	3	Flange motor 200
VS9PTMOT200110	4*	Chrome-plated semi-shaft SOMEBODY 20
VS9PTMOT201300	5*	Nut e.g. semi-shaft fixing
VS9PTMOT120020	6	Cylinder plate
VS9PTMOT201310	7*	Nut for nut semi-shaft
VS9PTMOT200200	8	Chromed stem
VS9PTVIT408030	9	Grain M8x30
VS9PT0RI02106N	10	O-ring sealing bushing shaft guide
VS9PTMOT202110	11*	Bushing semi-shaft SOMEBODY 20
VS9PTORI04081V	12	O-ring bushing shaft guide
VS9PTMOT500010	13	Washer premisoff. Somebody 51x1,6 mm
VS9PTMOT900003	14	Bellows d.i. 18 turned
VS9PTMOT346001	16*	Piston SOMEBODY 46 ceramic
VS9PTVIT708017	17*	Copper rosettes 10,5x20x2 M10
VS9PTVIT110040	18*	TE A2 M10X40 stainless steel screw
VS9PTVIT008140	19	TE 8.8 M8X140 galvanized screw
VS9PTVIT008150	20	TE 8.8 M8X150 galvanized screw
VS9PTVIT808008	21	Zinc plated nut and M8 class
VS9PTORI02056N	22	O-ring sealing bushing rod guide
VS9PTMOT202210	23*	Stem guide bushing 12mm M20x1,5
VS9PTORI00115N	24*	O-ring stem guide bushing
VS9PTVIT08358R	25	Stem log
VS9PTVIT8008020	25B*	TE 8.8 M8x20 galvanized screw

CODE	POS.	DESCRIPTION
VS9PTMOPT500110	26	Pre-outlet flange
VS9PTORI03237E	27	O-ring intermediate body
VS9PTMOT546100	28	Intake hub
VS9PTRAC500050	29	3/4" nylon rubber holder hose 20
VS9PTORI00161E	30	O-ring pump body
VS9PTMOT446000	31	Lip seal
VS9PTMOT546110	32	Pump hub
VS9PTVIT610021	33	TE 140HV rosettes 10,5x21xM10 galvanized
VS9PTVIT010160	34	TE 8.8 M10x160 galvanized screw
VS9PTVIT727033	35*	Copper rosettes 27x33x1.5 3/4"
VS9PTMOT605010	36*	Single body valve
VS9PTMOT601410	37*	Valve plug
VS9PTMOT601110	38*	Seat widia Ģ17x30 somebody
VS9PTMOT601210	39*	Sfeda for valve 15mm
VS9PTMOT601300	40*	Valve spring
VS9PTMOT600210	41*	Valve cap
VS9PTPNE029000	42	Small limit switch
VS9PTVIT504025	43	Screw TCB+4.8 M4x25 galvanized
VS9PTCAR210050	44	Relay limit switch cover
VS9PTMOT20011R	45	Tree
VS9PTMOT20211R	46	Bushing for shaft guide Ø20
VS9PTMOT34600R	47	Full piston ceramic Ø 46
VS9PTMOT20221R	48	Stem guide bushing
VS9PTMOT69001R	49	Valve
VS9PTRAC161520	50	Fitting 90 laying 1/2" tube 15
9PTKITPM2000		Pneumatic kit 200
9PTKITI00046		Hydraulic kit 36

OTS ELECTROSTATIC GUN

3000AL TIN NOZZLE

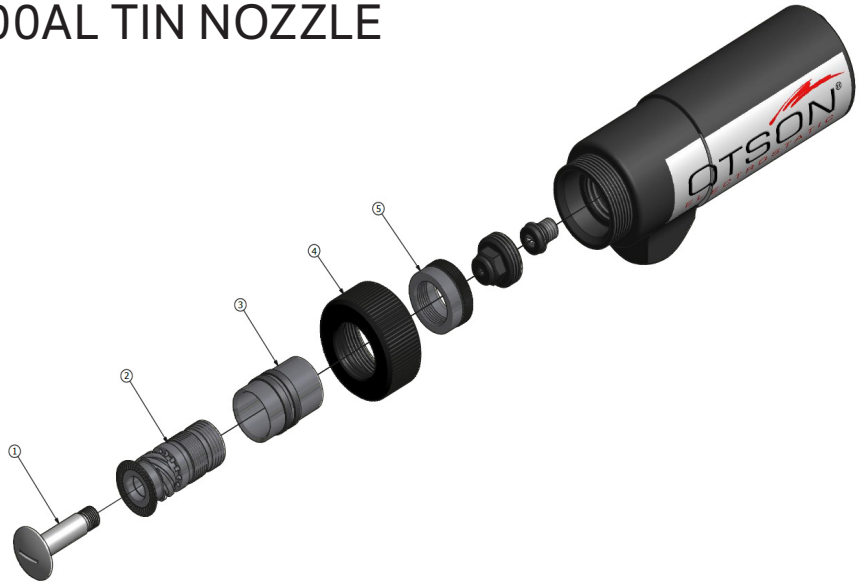

POS.	CODE
1	3000AL01
2+3	3000AL23
4	3000AL04
5	3000AL05

3000AK ROUND NOZZLE FRP

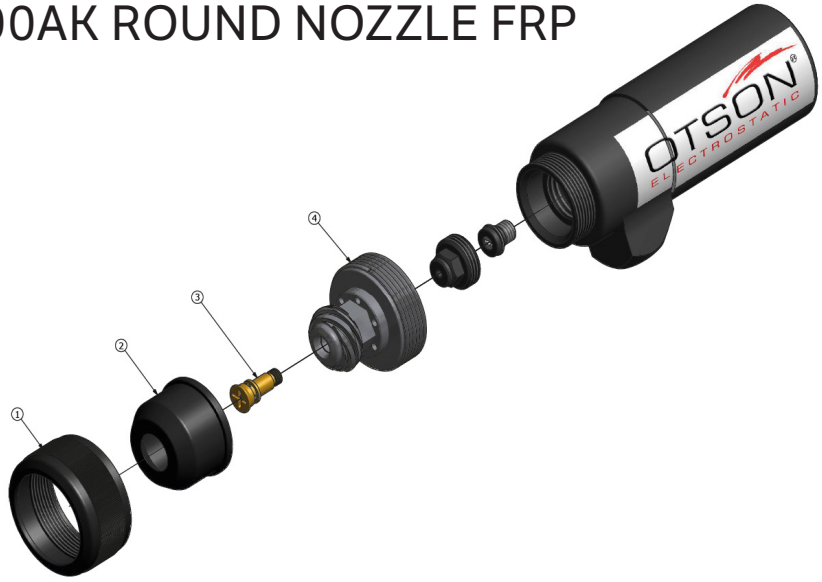

POS.	CODE
1	3000AK01
2	3000AK02
3	3000AK03
4	3000AK04
5	3000AQ05

3000AQ FAN NOZZLE FRP

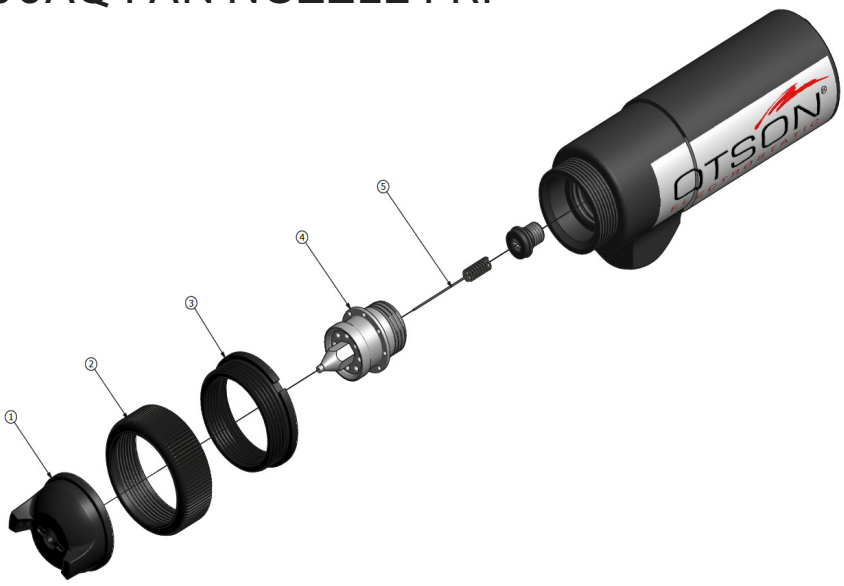

POS.	CODE
1	3000AQ01
2	3000AQ02
3	3000AQ03
4	3000AQ04
5	3000AQ05

OTS ELECTROSTATIC GUN

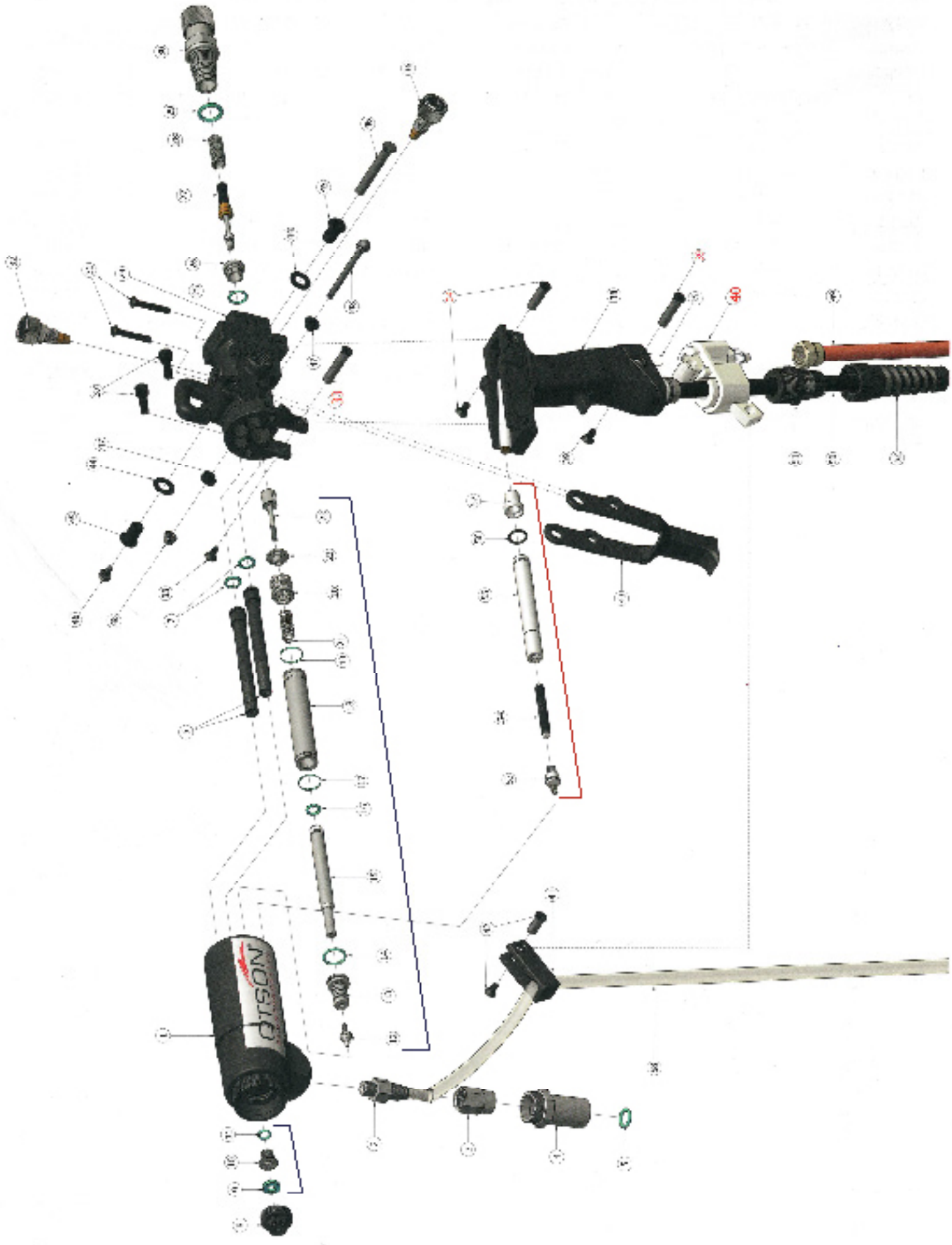

POS.	CODE	DESCRIPTION
	30BGA00	GUN BARREL UNIT (COMPLETE)
1	30BGA01	Gun Barrel
2	30BGA02	Paint Tube Connector-A
3	30BGA03	Paint Tube Connector-B
4	30BGA04	Paint Tube Connector-C
5	30BGA05	O-ring (Paint Tube Connector-C)
6	30BGA06	FRP Air tube
7	30BGA067	O-ring
	30BGB00	HAMMER UNIT (COMPLETE)
8	30BGB08	Hammer Front Seat
9	30BGB09	Conducting ring (Hammer Seat)
10	30BGB10	Hammer seat
11	30BGB11OR2	Conducting O-Ring2 (Hammer Seat)
12	30BGB12	Hammer
13	30BGB13	Teflon Seat
14	30BGB14OR1	O-Ring (Teflon Seat)
15	30BGB15	Hammer Stud-A
16	30BGB16OR1	O-Ring (Hammer Stud-A)
17	30BGB17OR1	O-Ring (Hammer Stud-A)
18	30BGB18	Hammer Stud-B
19	30BGB19OR2	O-Ring (Hammer Stud-B)
20	30BGB20	Spring A
21	30BGB21	Spring B
22	30BGB22	Spring Seat
23	30BGB23	Hammer Stud-C
	30BGC00	HOOK UNIT (COMPLETE)
24	30BGC24	Hook Unit
25	30BGC25OR1	Teflon O-Ring (Throttle Seat)
26	30BGC26	Throttle Seat
27	30BGC27	Throttle Top Rod
28	30BGC28	Spring
29	30BGC29OR1	O-Ring(Air Flow Paint Regulating Knob)
30	30BGC30	Paint Regulating Knob
31	30BGC31	M4 Hexa-head Screw (A)
32	30BGC32	Air Flow Regulating Knob (ROUND Nozzle)
33	30BGC33	Hexa-head screw+Bolt (B)
34	30BGC34	Hexa-head screw+Bolt (C)
36	30BGC36	Air Flow Regulating Knob (ROUND nozzle)
35	30BGC35	M5 Hexa-head Screw
	30BGD00	HANDLE UNIT (COMPLETE)
38	30BGD38	Handle
41	30BGD41	Paint Tube Holding Clip
42	30BGD42	Hexa-head Screw+Bolt (B)
	30BGE00	TRIGGER UNIT (COMPLETE)
43	30BGE43	Trigger
44	30BGE44	Washer
45	30BGE45	Collar
46	30BGE46	Outer Hexa-head Screw+Bolt
47	30BGE47	Collar
48	30BGE48	Screw stud+nut
52	30BGE52	HV Cable Connector
53	30BGE53	Conductivity Set
54	30BGE54	Electrode Bar
55	30BGE55	Teflon busher
56	30BGE56	O-ring
57	30BGE57	Teflon connector
	30BGB00	HAMMER UNIT (COMPLETE)
	30BGC00	HOOK UNIT (COMPLETE)
53-57	30BGE01	Complete electrode kit
58	30BGD58	Old model kit

VAPA15U - VS 36

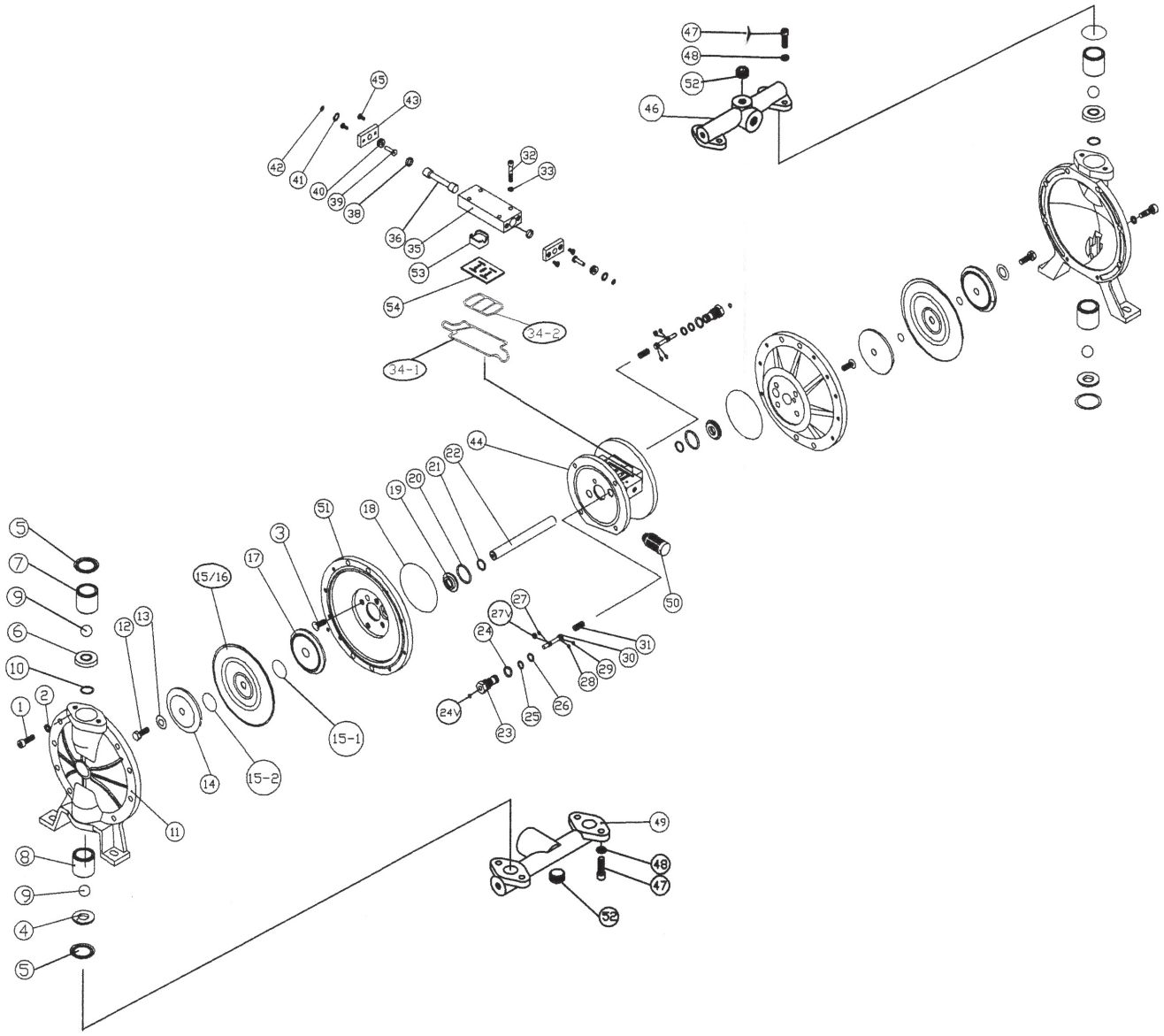

Code	pos.	Description
PC0102	1	Screw
PC0041	2/33	Washer
PC0004	3	Screw
PA0009	4	Intake valve seat
PB0108	5*	O-ring PTFE
PA0009	6	Compression valve seat
PA0133	7	Compression valve guide
PA0134	8	Intake ball guide
PA0004	9	Ball
PB0006	10*	PTFE Gasket
PA0039	11	Flange
PC0025	12	Screw
PC0057	13	Washer
PA0055	14/17	Membrane pad
PB0029	15*	Membrane
PD0001	15-1*	O-ring
PB0001	15-2*	O-ring PTFE

Code	pos.	Description
PD0011	18	O-ring
PB0175	19	Shaft guide
PD0007	20	O-ring
PD0003	21	O-ring
PA0082	22	Shaft
PD0002	24V	Complete valve
PC0005	32	Screw
PD0140	34-1	Gasket
PD0139	34-2	Gasket
PA0103	35	Exchanger
PA0122	46/49	Discharge / Feeding pipe
PC0001	47	Screw
PC0042	48	Washer
PB0046	50	Silencer
PA0200	51	Inside flange
PB0066	53	Exchanger slide
PB0072	54	Exchanger plate

15K010 **Repair kit complete with: PB0029x2 - PB0006x2 - PB0108x4 - PB0001x2 - PD0001x2

VAPA20U - VS 50

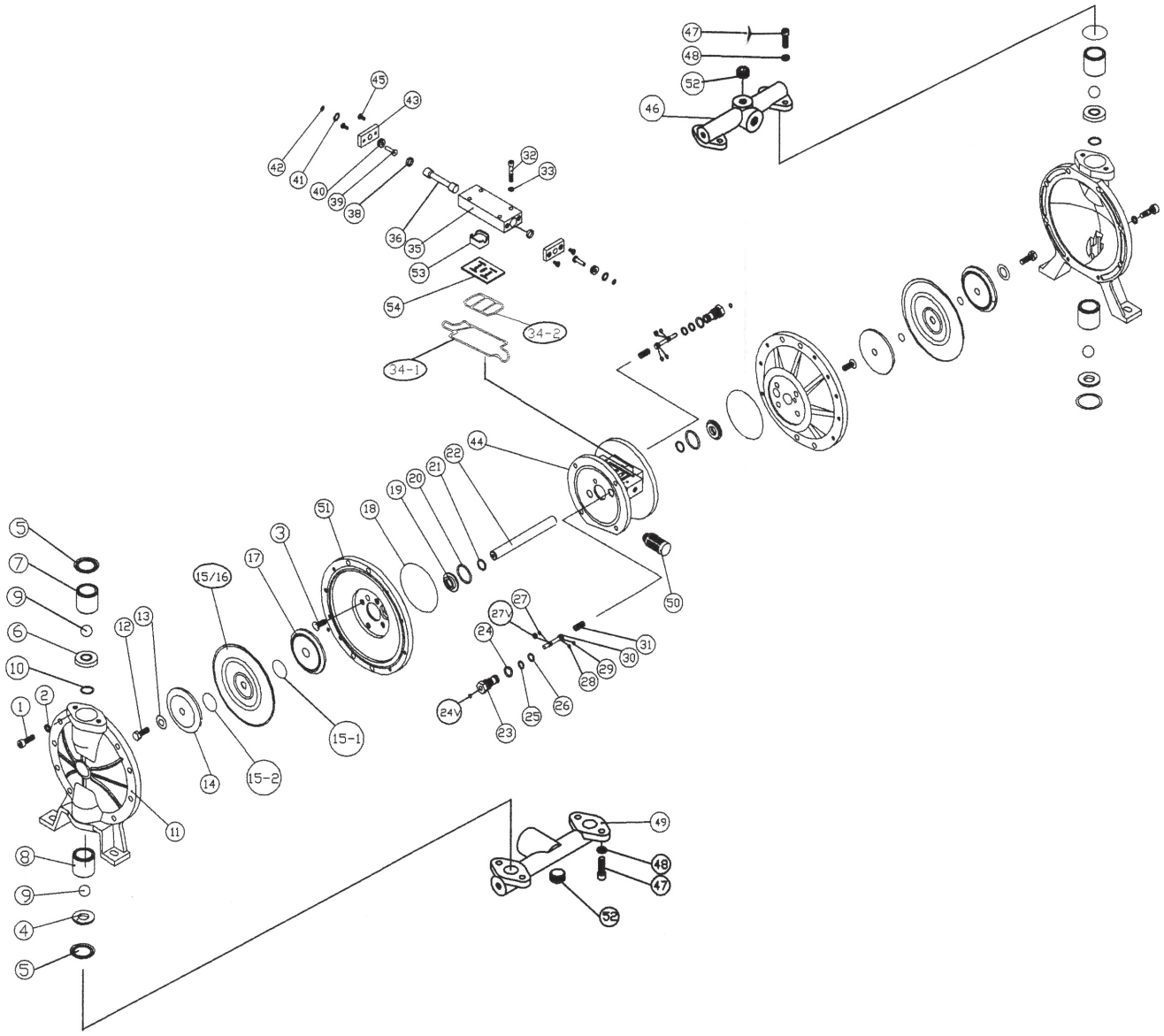

Code	pos.	Description
PC0001	1	Screw
PC0042	2/47	Washer
PC0004	3	Screw
PA0014	4	Intake valve seat
PB0083	5*	O-ring PTFE
PA0026	6	Compression valve seat
PB0128	7	Compression valve guide
PB0129	8	Intake ball guide
PA0001	9	Ball
PB0013	10*	PTFE Gasket
PA0047	11	Flange
PC0025	12	Screw
PC0057	13	Washer
PA0055	14/17	Membrane pad
PB0032	15*	Membrane
PD0001	15-1*	O-ring
PB0001	15-2*	O-ring PTFE

Code	pos.	Description
PD0011	18	O-ring
PB0175	19	Shaft guide
PD0007	20	O-ring
PD0003	21	O-ring
PA0086	22	Shaft
PD0002	24V	Complete valve
PC0005	32	Screw
PC0041	33	Washer
PD0140	34-1	Gasket
PD0139	34-2	Gasket
PA0103	35	Exchanger
PA0131	46/49	Discharge / Feeding pipe
PC0066	48	Screw
PB0046	50	Silencer
PA0197	51	Inside flange
PB0066	53	Exchanger slide
PB0072	54	Exchanger plate

20K010 *Repair kit complete with:: PB0032x2 - PB0013x2 - PB0083x4 - PB0001x2 - PD0001x2

VAPP20

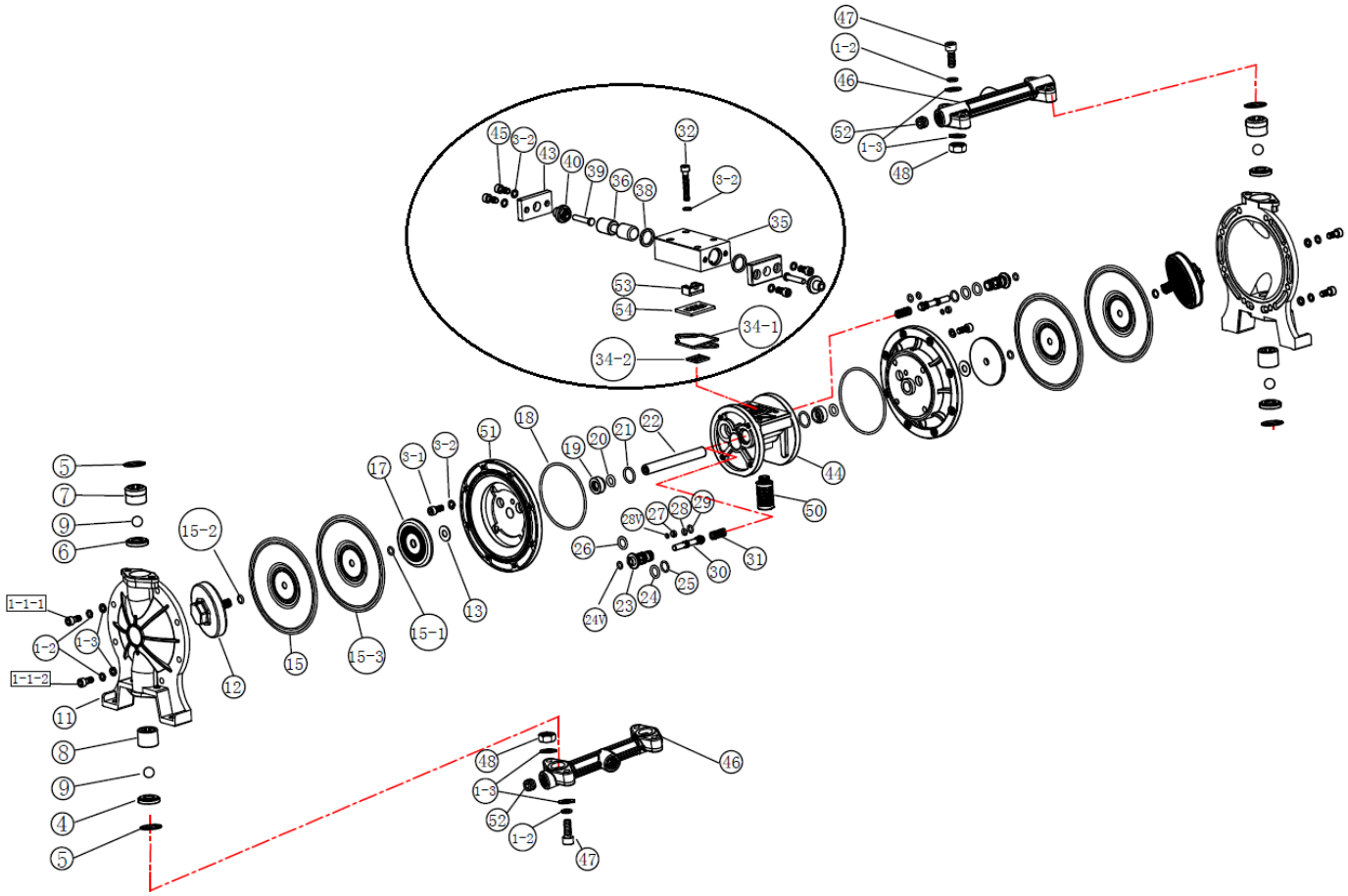

Code	pos.	Description	Code	pos.	Description
20PP111	1 -1/2	Screw	20PP018	18	O-ring Internal flange
20PP112	1-2	Washer	20PP019	19	Shaft guide
20PP003	3-1/2	Screw	20PP020	20	O-ring
20PP004	4	Suction valve seat	20PP021	21	O-ring
20PP005	5*	O-ring PTFE	20PP022	22	Shaft
20PP006	6	Compression valve seat	PD0002	23-31	Complete valve
20PP007	7	Compression ball guide	20PP032	32	Exchanger screw
20PP008	8	Suction ball guide	PD0140	34-1	Gasket
20PP009	9*	PTFE ball	PD0139	34-2	Gasket
20PP011	11	PP Flange	PA0103	34-45	Exchanger
20PP012	12	External plate with screw	20PP046	46	Manifold PP
PB0032	15*	Membrane	20PP048	48	Bulk
20PP151	15-1*	O-ring	PB0046	50	Silencer
20PP152	15-2*	O-ring PTFE	20PP051	51	Internal flange
20PP153	15-3*	Internal air membrane	PB0066	53	Exchanger slide
20PP017	17	Plate	PB0072	54	Exchanger plate
20PPK10	*Repair kit complete with: 20PP005x4 + PB0032x2 + 20PP151x2 + 20PP152x2 + 20PP153x2 + 20PP009x4				

VAPA31U

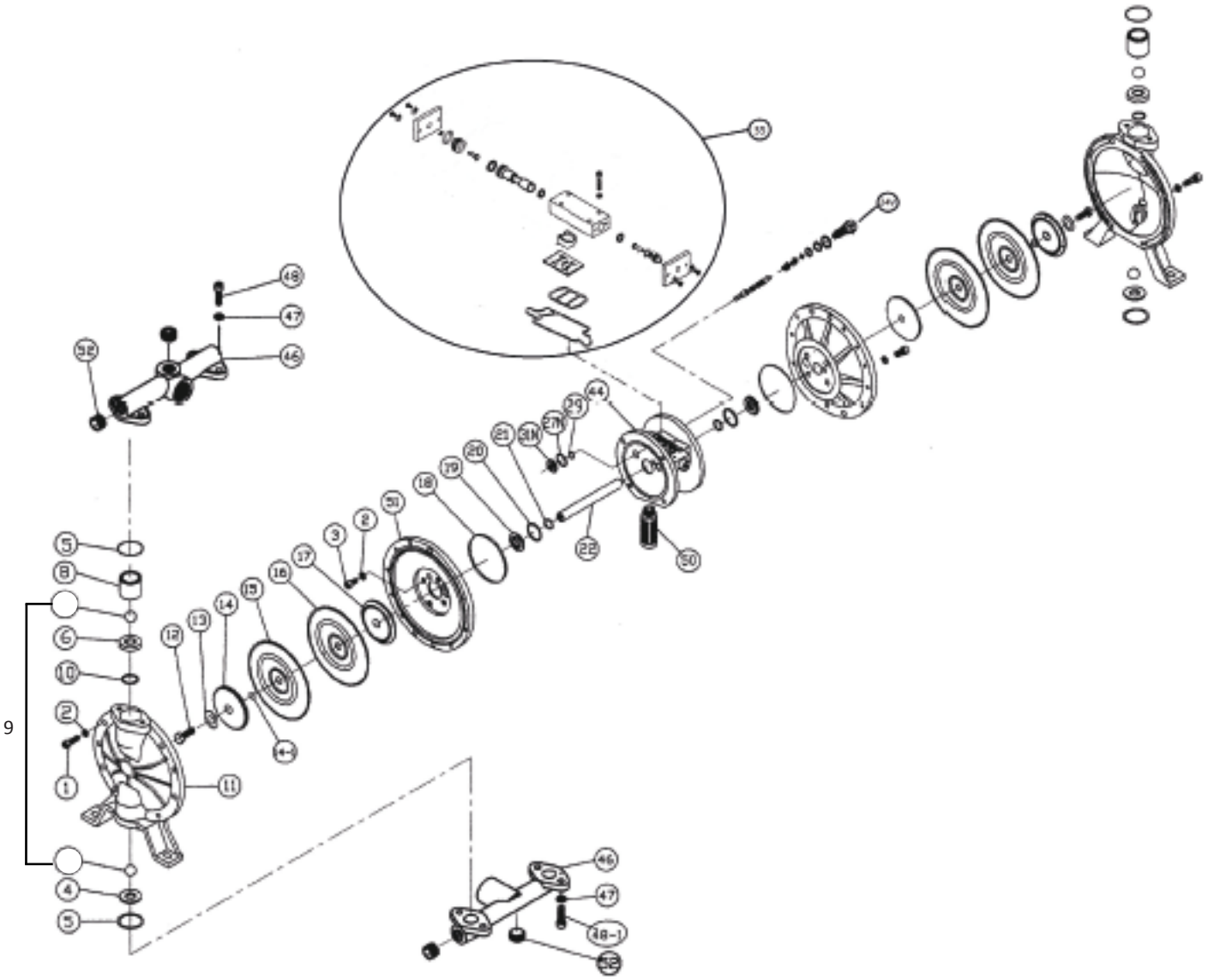

Code	pos.	Description
31U001	1	Hexagon screw
31U002	2	Washer
31U003	3	Hexagon screw
31U004	4	Intake valve seat
31U005	5*	O-ring PTFE
31U006	6	Compression valve seat
31U008	8	Compression valve guide
31U009	9	Ball
31U010	10*	PTFE o-ring
31U011	11	Flange
31U012	12	Screw
31U013	13	Washer
31U014	14	External plate
31U141	14-1*	O-ring PTFE
31U015	15*	Membrane
31U016	16*	Inside membrane
31U017	17	Inside pad

Code	pos.	Description
31U018	18	PTFE Gasket
31U019	19	Shaft guide
31U020	20	O-ring
31U021	21	O-ring
31U122	22	Shaft
31U24V	24V	Complete valve
31U27N	27N	O-ring
31U029	29	O-ring
31U31N	31N	Valve guide
31U035	35	Complete exchanger
31U044	44	Pump body
31U046	46	Discharge / Feeding pipe
31U047	47	Washer
31U048	48	Hexagon screw
31U481	48-1	Hexagon screw
31U049	49	Inlet fitting
31U050	50	Silencer
31U052	52	Connector

31K010	*Repair kit complete with: 31U005x4 -31U010x2 - 31U0141x2 - 31U015x2 - 31U016x2

VAPA40U

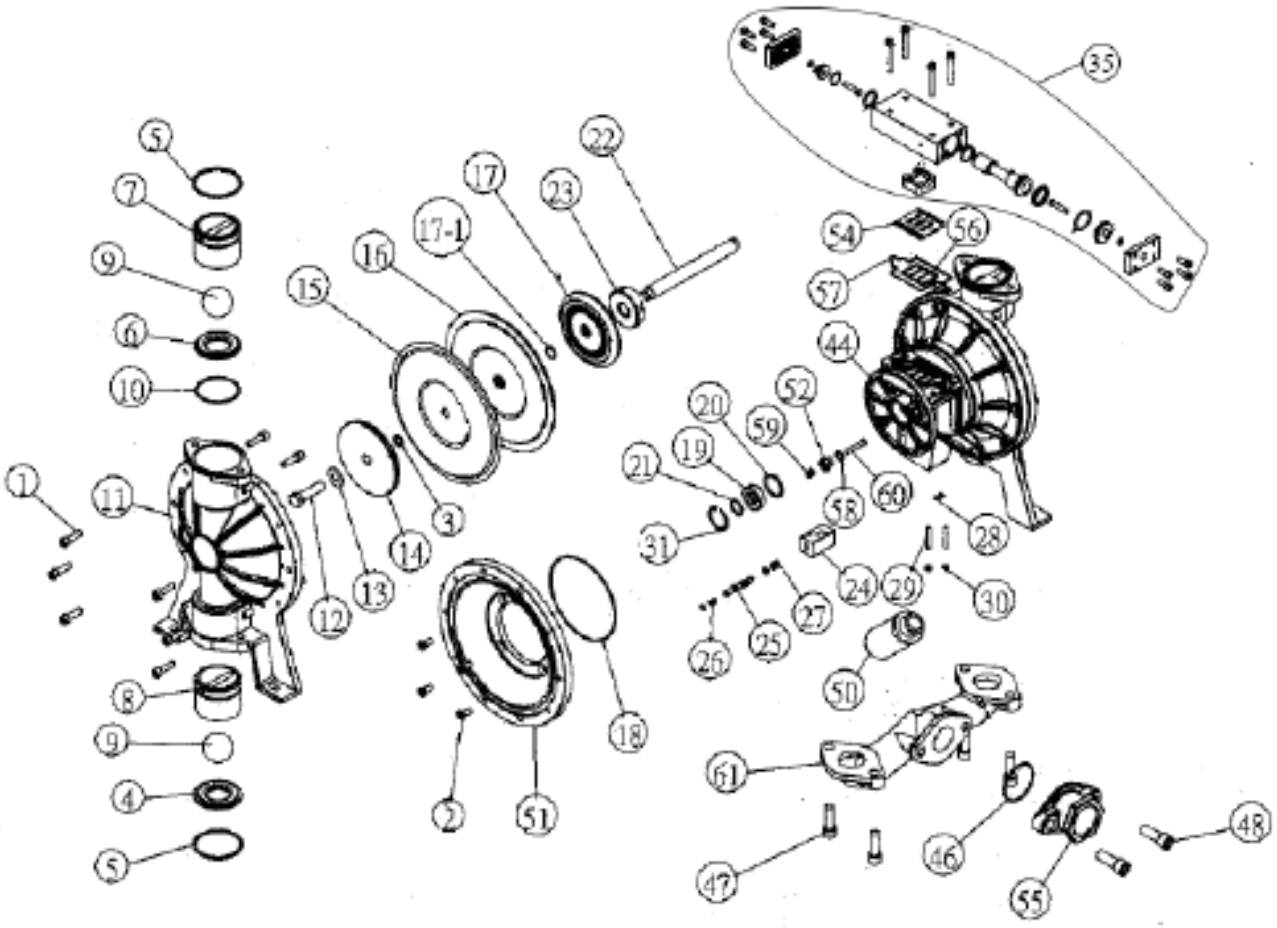

Code	pos.	Description
40U001	1	Hexagon screw
40U002	2	Hexagon screw
40U003	3*	Washer
40U004	4	Lower ball seat
40U005	5*	PTFE o-ring
40U006	6	Upper ball seat
40U007	7	Upper ball cage
40U008	8	Lower ball cage
40U009	9	Ball
40U010	10*	O-ring
40U011	11	Flange
40U012	12	Screw
40U013	13	Washer
40U014	14	External pad
40U015	15*	Membrane
40U016	16*	Inside membrane
40U017	17	Inside pad
40U171	17-1*	O-ring
40U018	18	O-ring
40U019	19	Valve guide
40U020	20	O-ring
40U021	21	O-ring
40U022	22	Pump shaft
40U023	23	Shaft guide
40U024	24	Exchange valve seat

Code	pos.	Description
40U025	25	Exchange valve body
40U026	26	O-ring
40U027	27	O-ring
40U028	28	O-ring
40U029	29	Hexagon screw
40U030	30	Nut
40U031	31	Locking ring
40U035	35	Complete exchanger
40U044	44	Pump body
40U046	46	O-ring
40U047	47	Hexagon screw
40U048	48	Hexagon screw
40U049	49	Feeding pipe
40U050	50	Silencer
40U051	51	Inside flange
40U052	52	Valve nut
40U054	54	Exchanger plate
40U055	55	Tube connector
40U056	56	internal o-ring
40U057	57	External o-ring
40U058	58	O-ring
40U059	59	O-ring
40U060	60	Pin
40U061	61	Discharge pipe

40K010 *Repair kit complete with: 40U005x4 -40U010x2 - 40U0171x2 - 40U015x2 - 40U016x2 - 40U003x2

VAPA50U

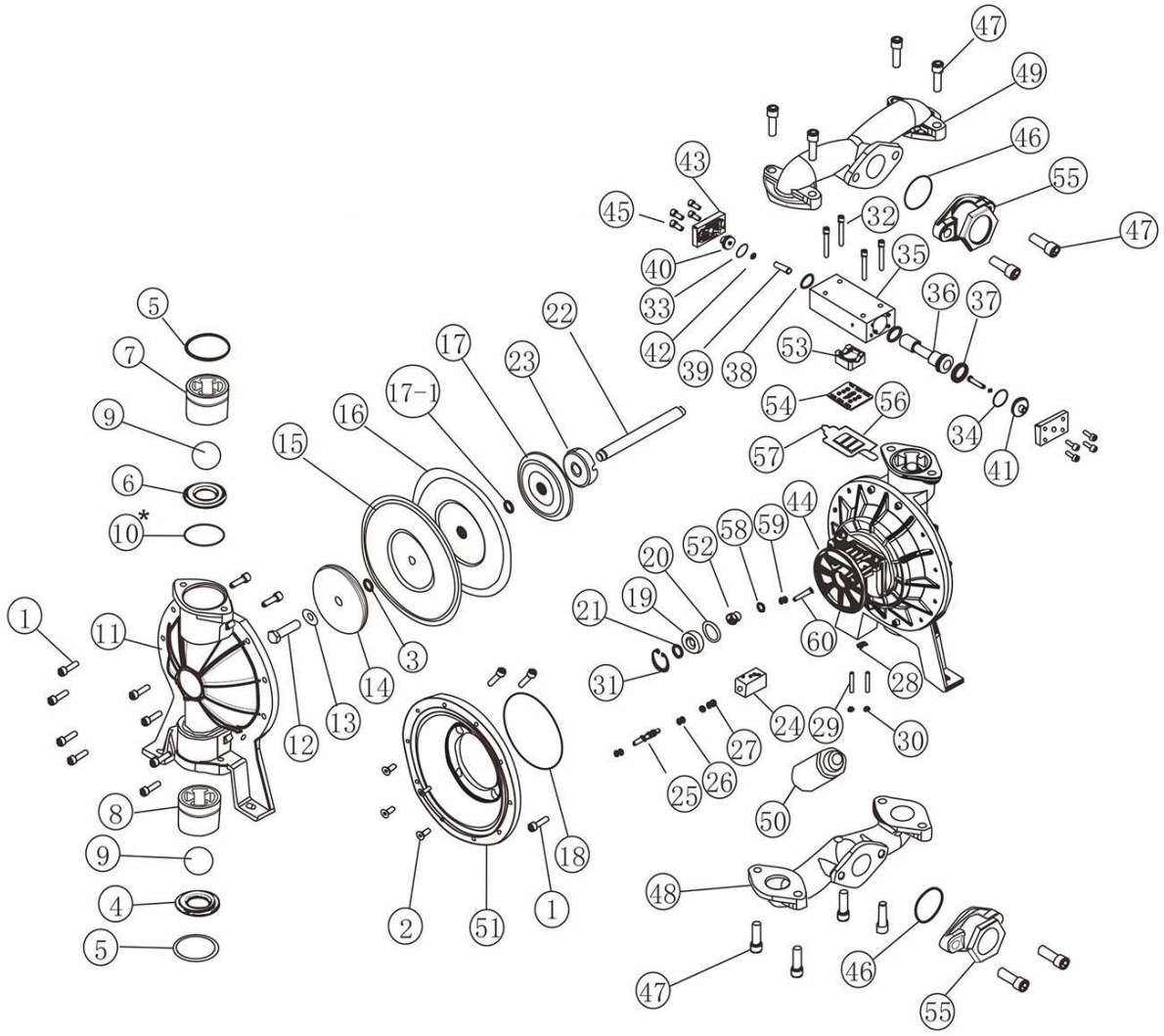

Code	pos.	Description	Code	pos.	Description
50U001	1	Hexagon screw	50U025	25	Exchange valve body
50U002	2	Hexagon screw	50U026	26	O-ring
50U003	3*	Washer	50U027	27	O-ring
50U004	4	Lower ball seat	50U028	28	O-ring
50U005	5*	O-ring teflon	50U029	29	Hexagon screw
50U006	6	Upper ball seat	50U030	30	Nut
50U008	7/8	Ball cage	50U031	31	Locking ring
50U009	9	Ball	50U035	35	Complete exchanger
50U010	10	O-ring	50U044	44	Pump body
50U011	11	Flange	50U046	46	O-ring
50U012	12	Screw	50U047	47	Hexagon screw
50U013	13	Washer	50U049	48	Feeding pipe
50U014	14	External pad	50U048	49	Discharge pipe
50U015	15*	Membrane	50U050	50	Silencer
50U016	16*	Inside membrane	50U051	51	Inside flange
50U017	17	Inside pad	50U052	52	Valve nut
50U007	17-1	O-ring	50U054	54	Exchanger plate
50U018	18	O-ring	50U055	55	Tube connector
50U019	19	Valve guide	50U056	56	internal o-ring
50U020	20	O-ring	50U057	57	External o-ring
50U021	21	O-ring	50U058	58	O-ring
50U022	22	Pump shaft	50U059	59	O-ring
50U023	23	Shaft guide	50U060	60	Pin
50U024	24	Exchange valve seat			
50K010		*Repair kit complete with: 50U005x4 -50U007x2 - 50U003x2 - 50U015x2 -50U016x2 - 50U003x2			

VS 25

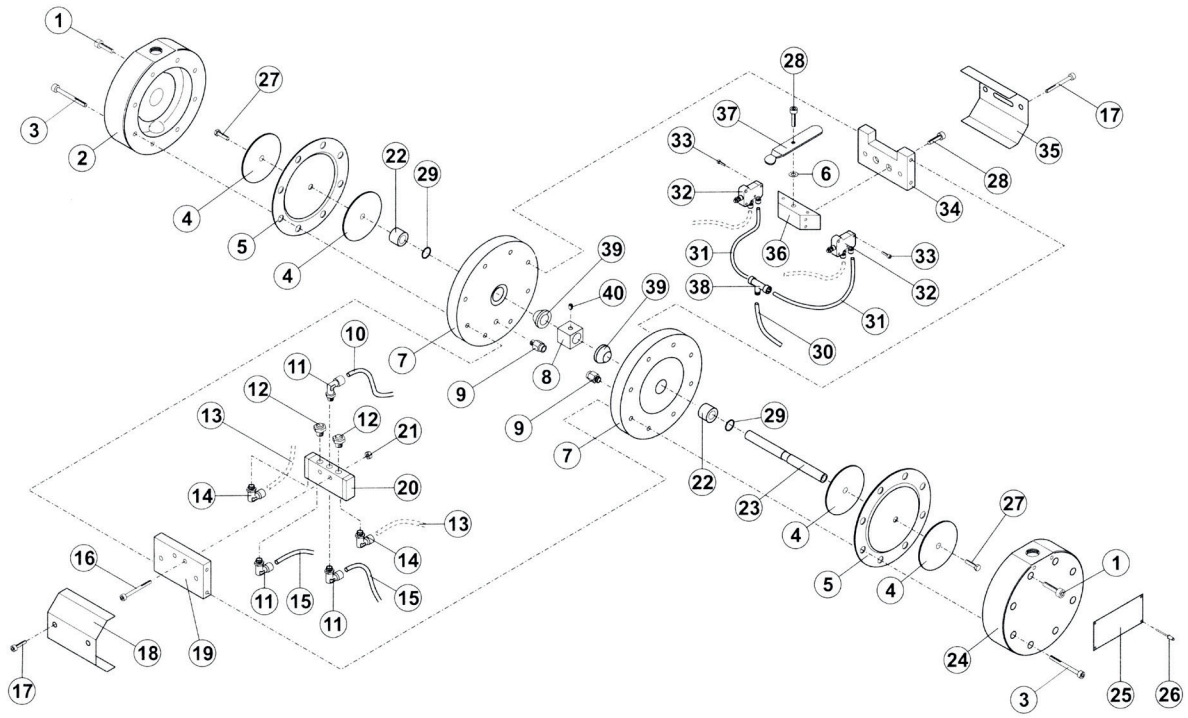

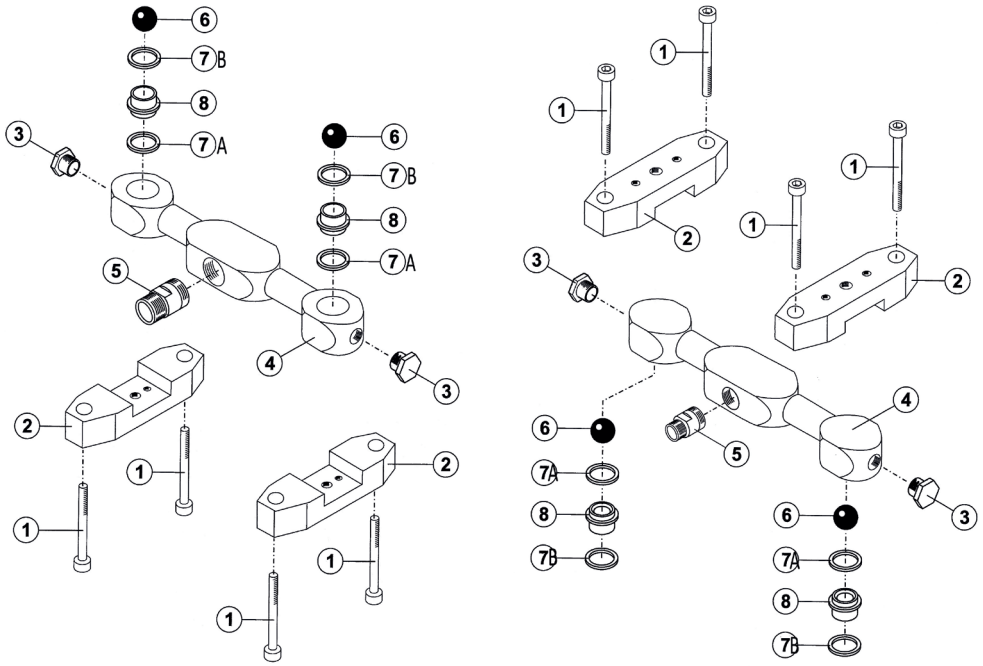

POS.	CODE
1	VTBR855
2	25102
4	25104
5	153434
6	490025
7A*	25107A
7B*	25107B
8	25108

POS.	CODE
1	VTBR855
2	25102
4	25104
5	153834
6	490025
7A*	25107A
7B*	25107B
8	25108

CODE	POS.	DESCRIPTION	CODE	POS.	DESCRIPTION
VTBR645	1	Allen screw M6 x 45	DB5	21	Self-blocking nut M5
25002	2	Left external flange	25022	22	Slider guide
VTBR660	3	Allen screw M6 x 60	25023	23	Slider
25004	4	Membrane pad in s. steel	25024	24	Right external flange
25005	5*	Membrane	VTESX816	27	Allen screw M8x16
25007	7	Internal flange	VTBR616	28	Screw M6x16
25008	8	Switch lock	3618	29	O-ring guid 614 MACMA
110618	9	Straight fitting 1/8” 6x4	3615	32	Pin microflow-valve
119618	11	Fitting 1/8” 90° 6x4	VTCR425	33	Cross-head screw M4x25
SL18	12	Silencer 1/8	25034	34	Switch support
119418	14	Fitting 1/8 90° 4x2	25035	35	Body cover
VTBR535	16	Allen screw M5x35	25036	36	Micro-valve support
VTBR510	17	Allen screw M5x10	25037	37	Release lever
25018	18	Body cover	TRAP24	38	3-way fitting 4-2
25019	19	Valve support	25039	39	Sensing rod
3634	20	Exchange valve 1/8 - 5 vie	GR810	40	Grain M8x10
25K010		*Repair kit complete with: 25005x2 - 25107Ax4 - 25107Bx4			

VS 25 STEEL

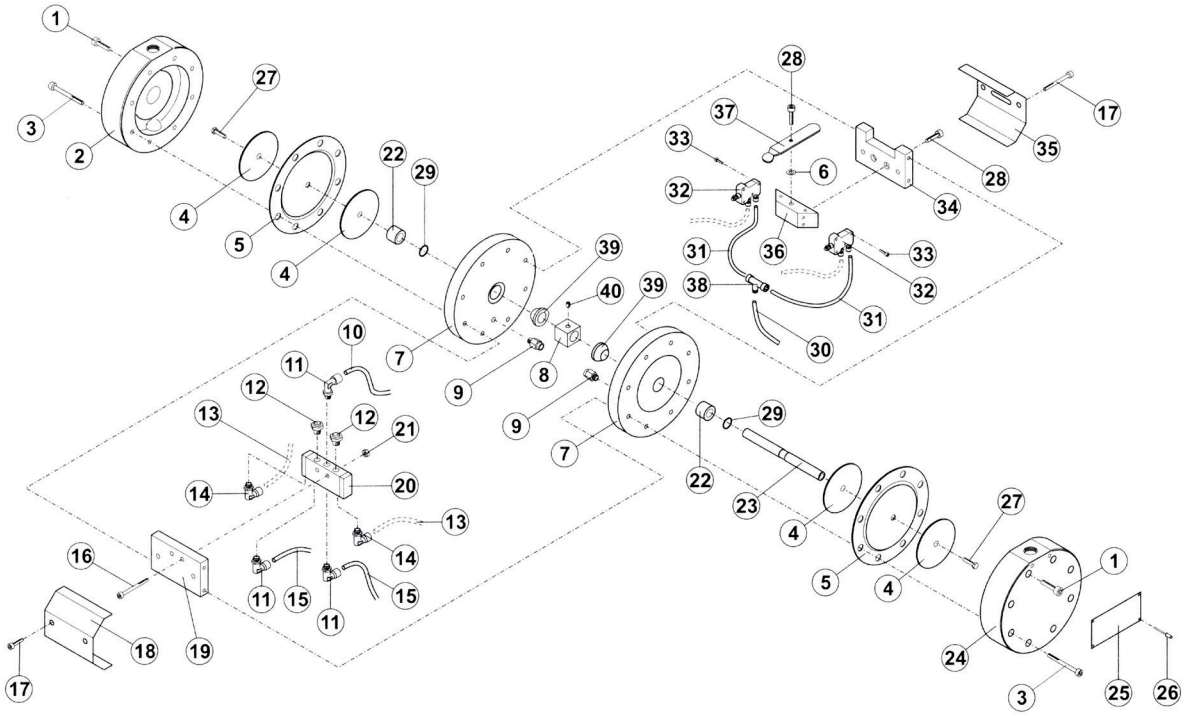

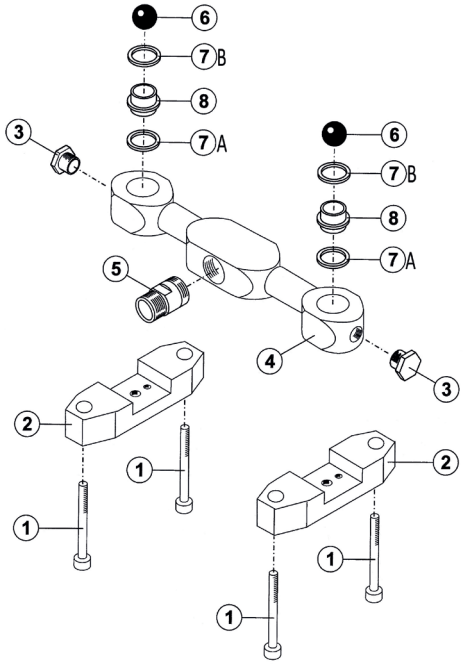

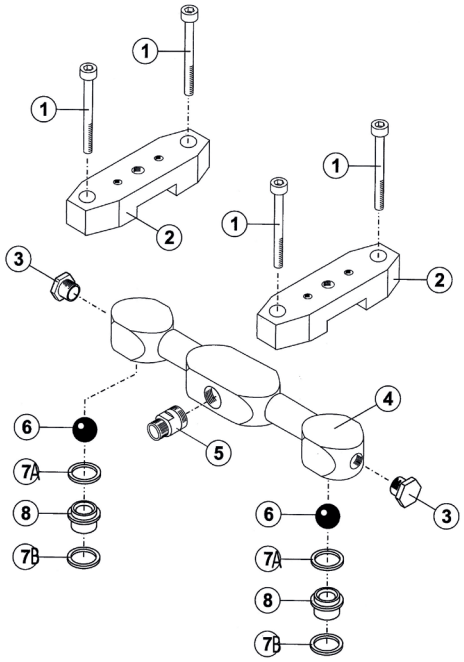

POS.	CODE
1	VTBR855
2	25102INOX
4	25104INOX
5	163434
6	490025
7A*	25107A
7B*	25107B
8	25108

POS.	CODE
1	VTBR855
2	25102INOX
4	25104INOXS
5	163834
6	490025
7A*	25107A
7B*	25107B
8	25108

CODE	POS.	DESCRIPTION	CODE	POS.	DESCRIPTION
VTBR645	1	Allen screw M6 x 45	DB5	21	Self-blocking nut M5
25002INOX	2	Left external flange s.steel	25022	22	Slider guide
VTBR660	3	Allen screw M6 x 60	25023	23	Slider
25004	4	Membrane pad in s. steel	25024INOX	24	Right external flange s.steel
25005	5*	Membrane	VTESX816	27	Allen screw M8x16
25007	7	Internal flange	VTBR616	28	Screw M6x16
25008	8	Switch lock	3618	29	O-ring guid 614 MACMA
110618	9	Straight fitting 1/8 6x4	3615	32	Pin microflow-valve
119618	11	Fitting 1/8 90° 6x4	VTCR425	33	Cross-head screw M4x25
SL18	12	Silencer 1/8	25034	34	Switch support
119418	14	Fitting1/8 90° 4x2	25035	35	Body cover
VTBR535	16	Allen screw M5x35	25036	36	Micro-valve support
VTBR510	17	Allen screw M5x10	25037	37	Release lever
25018	18	Body cover	TRAP24	38	3-way fitting 4-2
25019	19	Valve support	25039	39	Sensing rod
3634	20	Exchange valve 1/8 - 5 ways	GR810	40	Grain M8x10
25K010		*Repair kit complete with: 25005x2 - 25107Ax4 - 25107Bx4			

VS 2B

UPPER MANIFOLD

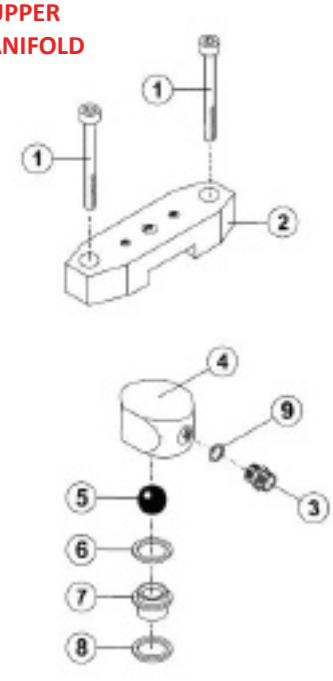

LOWER MANIFOLD

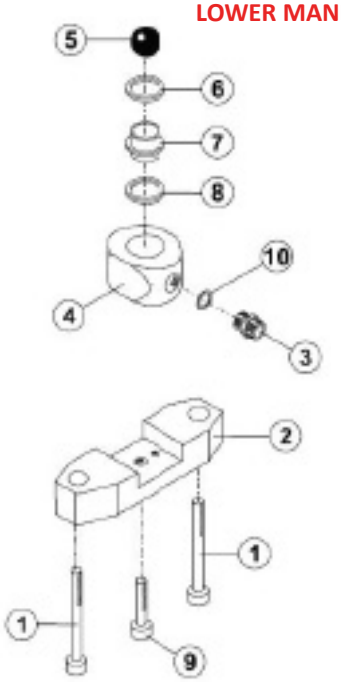

POS.	CODE
1	VTBR860
2	25102
3	153834
4	251042B
5	490025
6*	25107A
7	25108
8*	25107B

POS.	CODE
1	VTBR860
2	25102
3	153434
4	251042B
5	490025
6*	25107A
7	25108
8*	25107B

FILTER ASSEMBLY

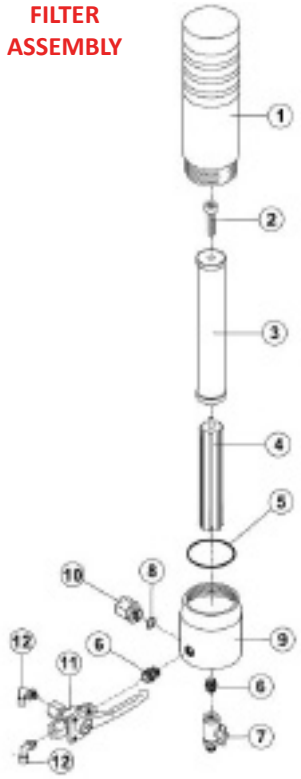

POS.	CODE	DESCRIPTION
	300500	Complete filter without valve
2/4	300004V	Support with screw
3	310XXX	Manifold filter
5	300502	PTFE Gasket
6	46150	Nipple
7	383014	Valve
8	155014	Washer
10	173838	Adapter
11	R3V2B	3-way valve
12	129814	Rapid fitting

MIXING GROUP

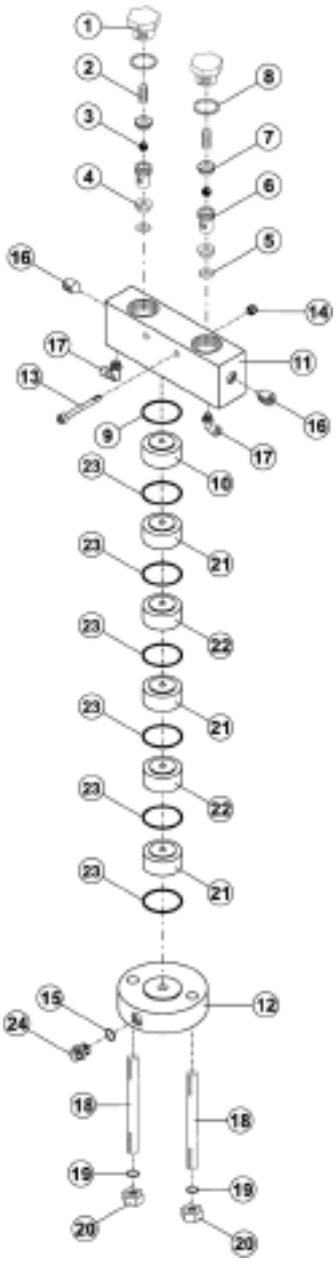

POS.	CODE
1	100372B
2	100382B
3	100392B
4	100402B
5	100412B
6	100422B
7	100432B
8	RR22
9*	256012B
10	256022B
11	256032B
12	256042B
13	VTBR645
14	DB6
15	155014
16	GR142B
17	129814
18	256052B
19	RD82B
20	DB82B
21	256062B
22	256072B
23*	36042B
24	151414
25	256002B
2BKM10	Gasket kit: 256012B x1 and 36042B x6

VS 28 3:1

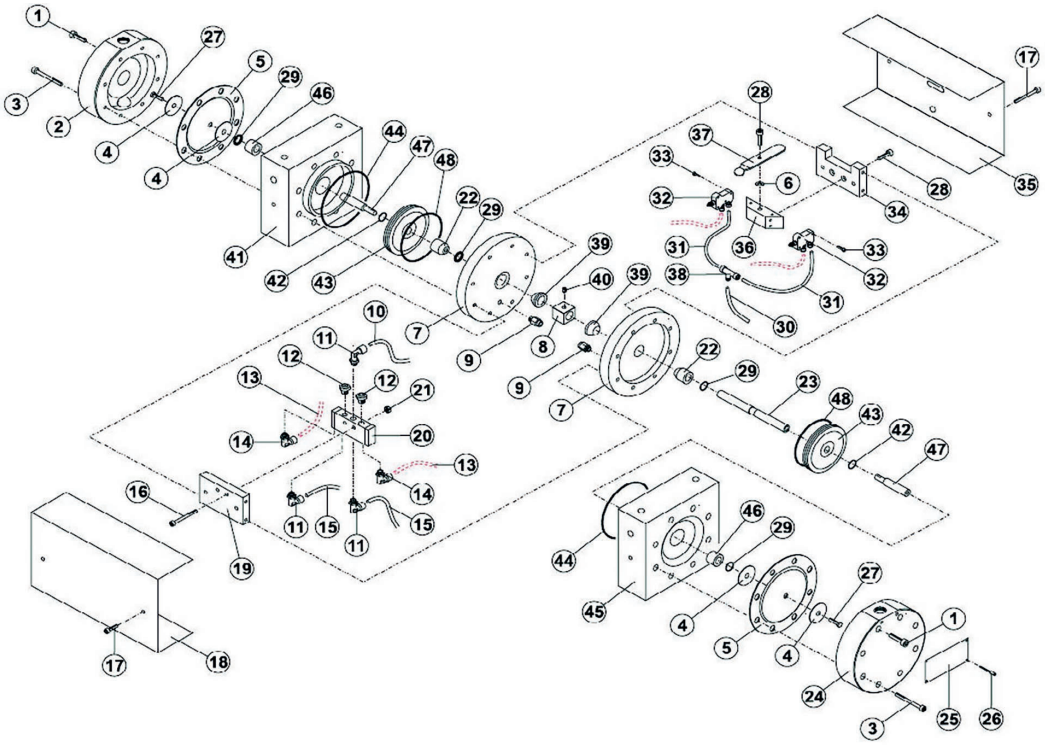

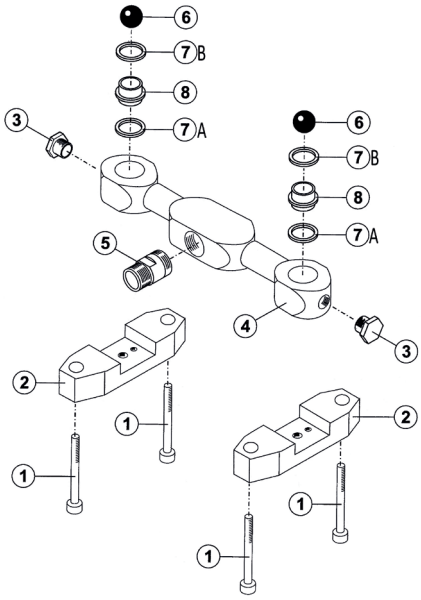

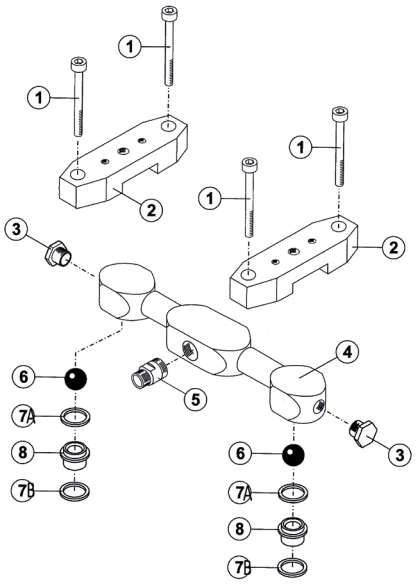

POS.	CODE
1	VTBR855
2	25102L
4	28104L
4X	28104X
6	490025
7A*	25107A
7B*	25107B
8	25108L

POS.	CODE
1	VTBR855
2	25102L
4	28104L
4X	28104X
6	490025
7A*	25107A
7B*	25107B
8	25108L

CODE	POS.	DESCRIPTION	CODE	POS.	DESCRIPTION
VTBR645	1	Allen screw M6 x 45	VTESX816	27	Allen screw M8x16
25002L	2	Left external flange	VTBR616	28	Screw M6x16
VTBR660	3	Allen screw M6 x 60	3618L	29*	O-ring guide 614 MACMA
28005L	4 / 5*	Membrane kit	3615L	32	Pin microflow-valve
RD6L	6	Washer M6	VTCR425	33	Cross-head screw M4x25
25007L	7	Internal flange	25034L	34	Switch support
25008L	8	Switch lock	28035L	35	Body cover
110618	9	Straight fitting 1/8” 6x4	25036L	36	Micro-valve support
119618	11	Fitting 1/8” 90° 6x4	25037L	37	Release lever
SL18	12	Silencer 1/8	TRAP24	38	3-way fitting 4-2
119418	14	Connection 1/8 90° 4x2	25039L	39	Sensing rod
VTBR535	16	Allen screw M5x35	GR810	40	Grain M8x10
VTBR510	17	Allen screw M5x10	28041L	41	Left motor flange
28018L	18	Body cover	28042L	42*	O-ring
25019L	19	Valve support	28043L	43	Air piston
3634L	20	5-way Exchange valve 1/8	28044L	44*	O-ring
DB5	21	Self-blocking nut M5	28045L	45	Right motor flange
25022L	22	Slider guide	28046L	46	Air piston slider guide
25023L	23	Slider	28047L	47	Air piston slider
25024L	24	Right external flange	28048L	48*	O-ring
KMVS28	*Repair kit complete with: 28005Lx2 - 3618Lx4 - 28044Lx2 - 28042Lx2 - 28048Lx2 - 24017Ax4 - 25107Bx4				

VS 361 - OUT OF PRODUCTION

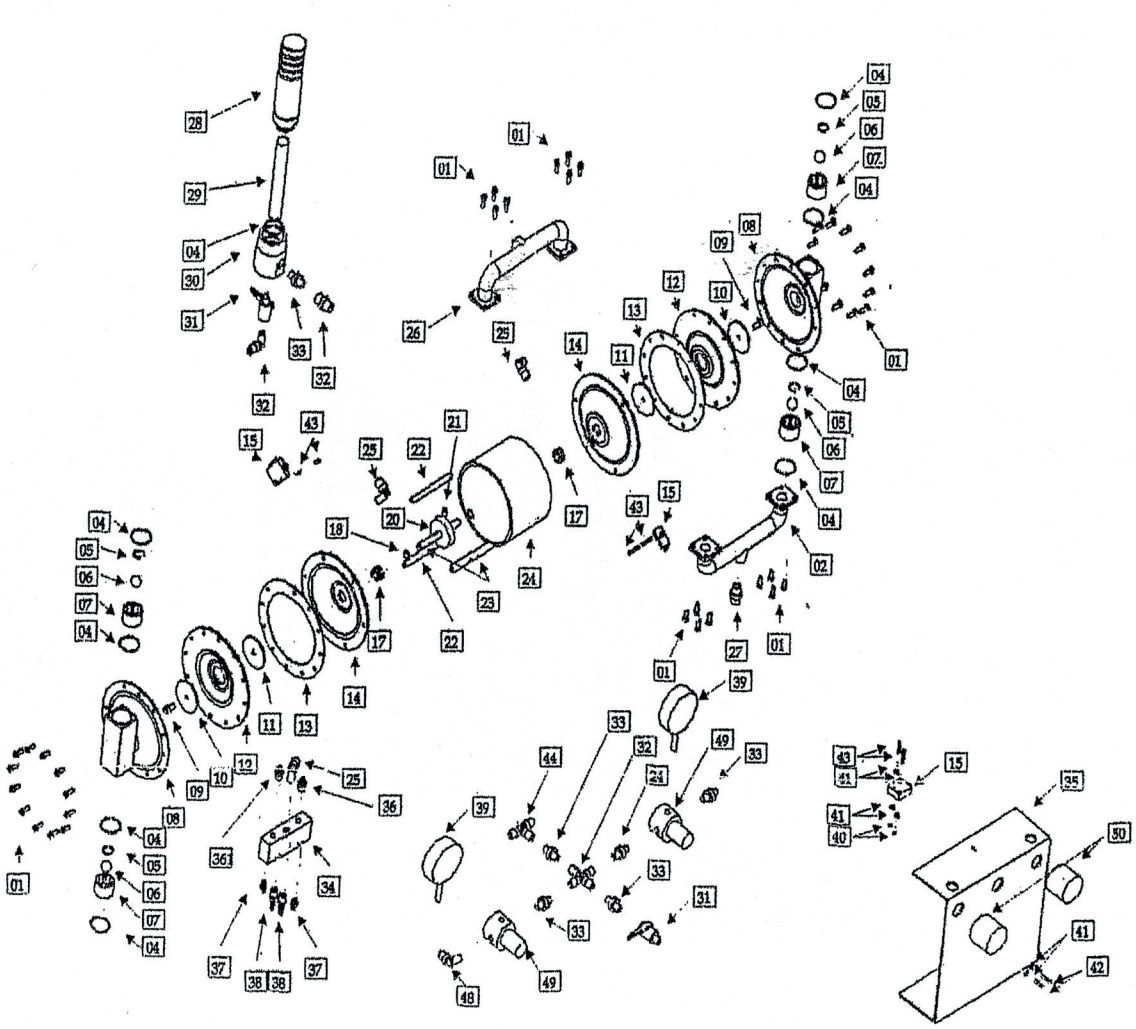

CODE	POS.
02001	1
02002	2
02003	3
02004	4
02005	5
02006	6
02007	7
02008	8
02009	9
02010	10
02011	11
02012	12
02013	13
02014	14
02015	15
02016	16
02017	17
02018	18
02019	19
02020	20
02021	21
02022	22
02023	23
02024	24
02025	25

CODE	POS.
02026	26
02027	27
02028	28
02029	29
02030	30
02031	31
02032	32
02033	33
02034	34
02035	35
02036	36
02037	37
02038	38
02039	39
02040	40
02041	41
02042	42
02043	43
02044	44
02048	48
02049	49
02050	50

VS K1

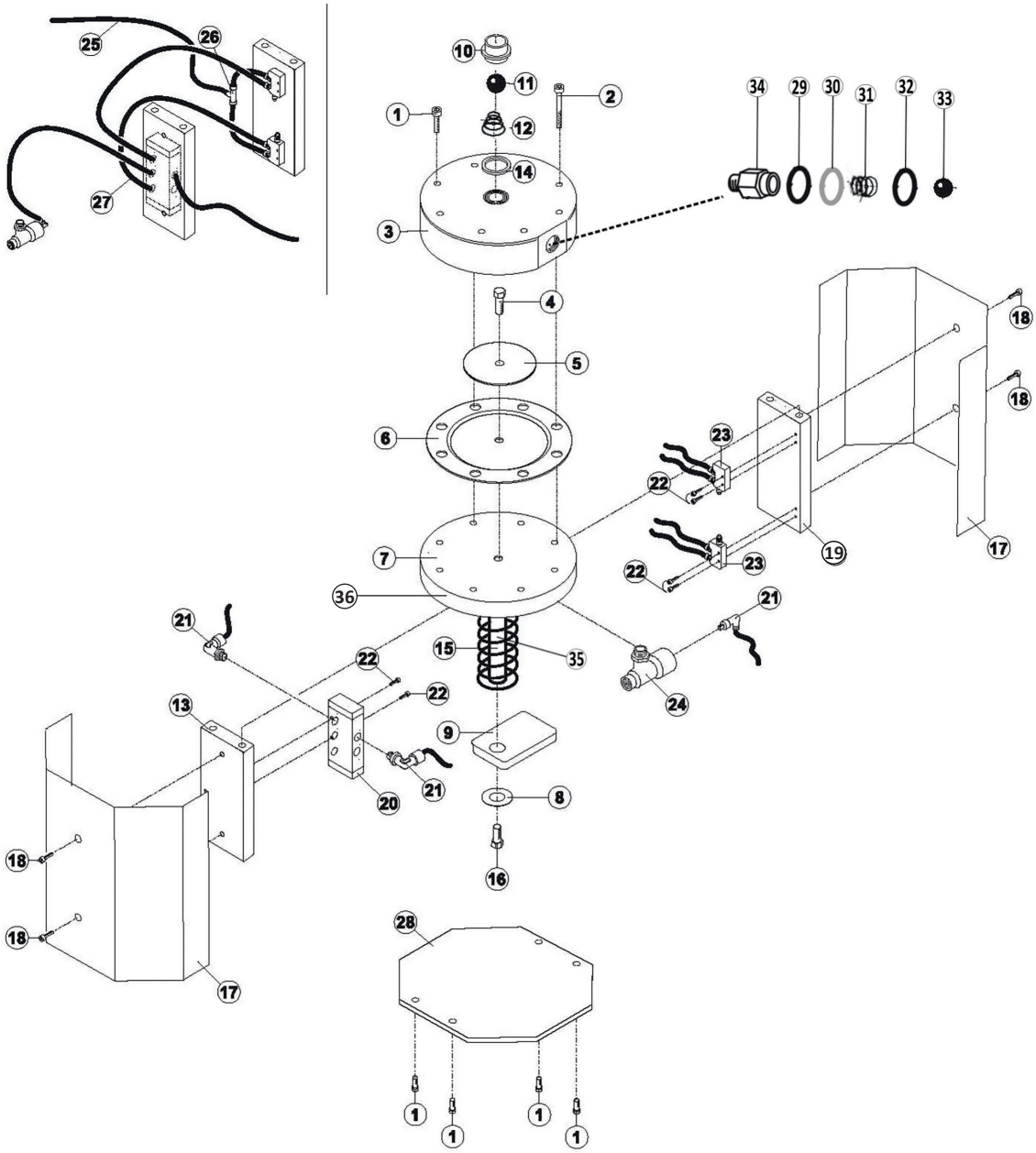

Code	pos.	Description
VTBR645	1	Screw M6X45
VTBR660	2	Screw M6X60
107	3	Flange
VTESX816	4	S.stell Screw M8x16
25004	5	Membrane pad
25005K1	6	Membrane
102	7	Air flange
103	8	Washer
104	9	Sensor
105	10	Intake valve body
SF18	11	S. steel ball
106	12	Spring
25019	13	Valve support
108	14	Gasket
109	15	Exchange valve
VTBR816	16	Screw M8
25018	17	S.steel cover

Code	pos.	Description
VTBR510	18	Screw M10
110	19	Micron support
3634K1	20	Exchange valve
119618	21	Rapid fitting 1/8” 6x4
VTBR425	22	Screw M4
3615	23	Microflow valve
111	24	Rapid discharge valve
35024	25 / 27	PTFE hose 2x4
TRAP24	26	T Rapid fitting 2x4
113	28	S. steel cover
155038	29	Copper washer 3/8”
R183800i	30	Aluminium spacer
400443	31	Spring
400447	32	Support ring
490011	33	S.steel ball ø11
173838	34	Fitting FS 3/8”x3/8”
127	35	Shaft
3618L	36	O-ring 614 macma

VS 24 - OUT OF PRODUCTION

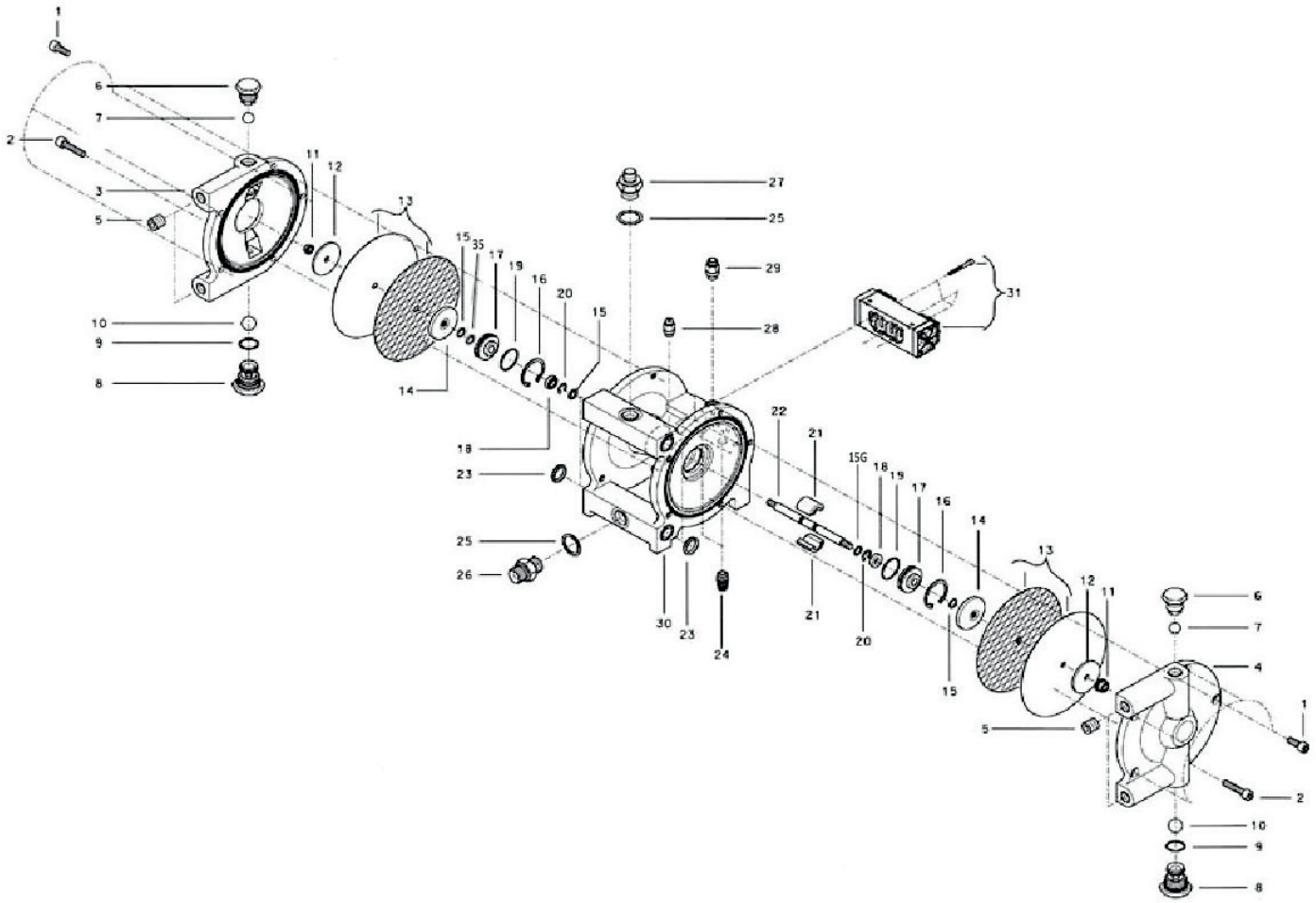

Code	pos.	Description
212462	1	Screw 8x20
212414	2	Screw 8x35
212454	3	Left Flange
212426	4	Right Flange
212428	5	Cap M 3/8”
212424	6	S.steel compression valve
212416	7	Ball Ø 14 mm.
212422	8	S.steel intake valve
212420	9	Intake valve gasket
212418	10	Ball Ø 18 mm.
212463	11	Self-blocking nut M8
212430	12	Rear plate
212490	13	Rubber+PTFE membrane kit
212434	14	Front plate
212432	15	O-ring 2025
212435G	15G	O-ring 2031

Code	pos.	Description
212436	16	Seeger ring 37 mm.
212440	17	Shaft guide
212442	18	Macma gasket
212438	19	O-ring 3118
212444	20	Beenzing ring 8 mm.
212448	21	Coupling
212446	22	S. steel shaft
212450	23	PTFE Ring
212461	24	Silencer
212460	31	Pneumatic exchanger
212435	35	Damper

Code	pos.	Description
212447	2x15 / 2x15G 2x20 / 1x21 / 1x22	Motor shaft kit
212473	2x15 / 2x15G 2x18 / 2x19	Motor gasket kit
212451		PTFE ring kit (4 pcs)
CAKR14		Air regulation kit
25502C		Cart

TURBINE TUBOBLAST

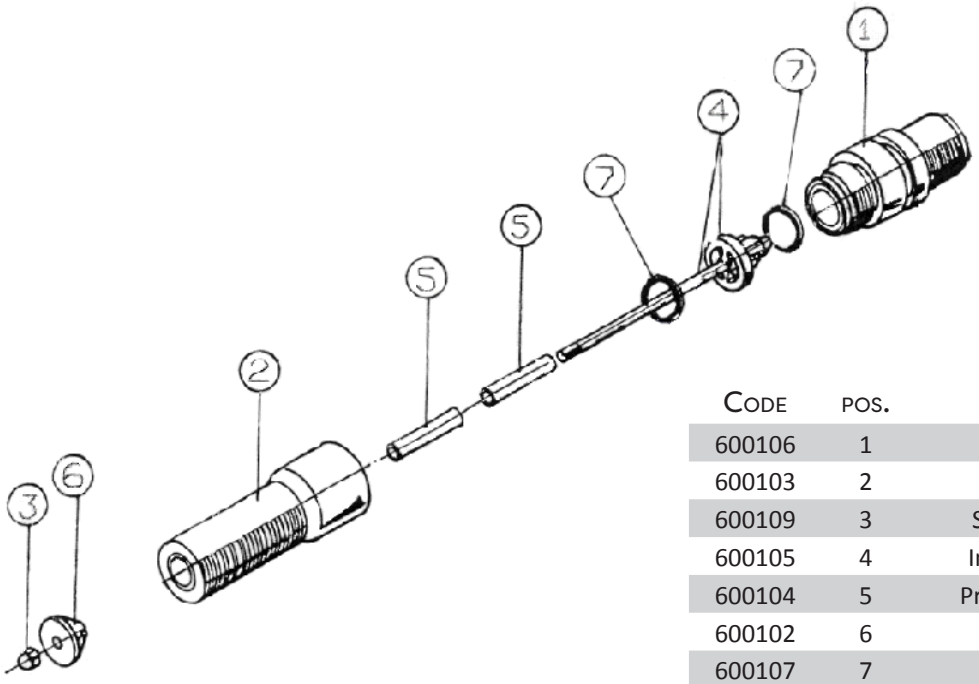

Code	pos.	Description
600106	1	Housing
600103	2	Front body
600109	3	Self-blocking nut
600105	4	Internal deflector
600104	5	Protection cylinder
600102	6	Deflector
600107	7	Gasket

TURBINE TUBOBLAST SENIOR

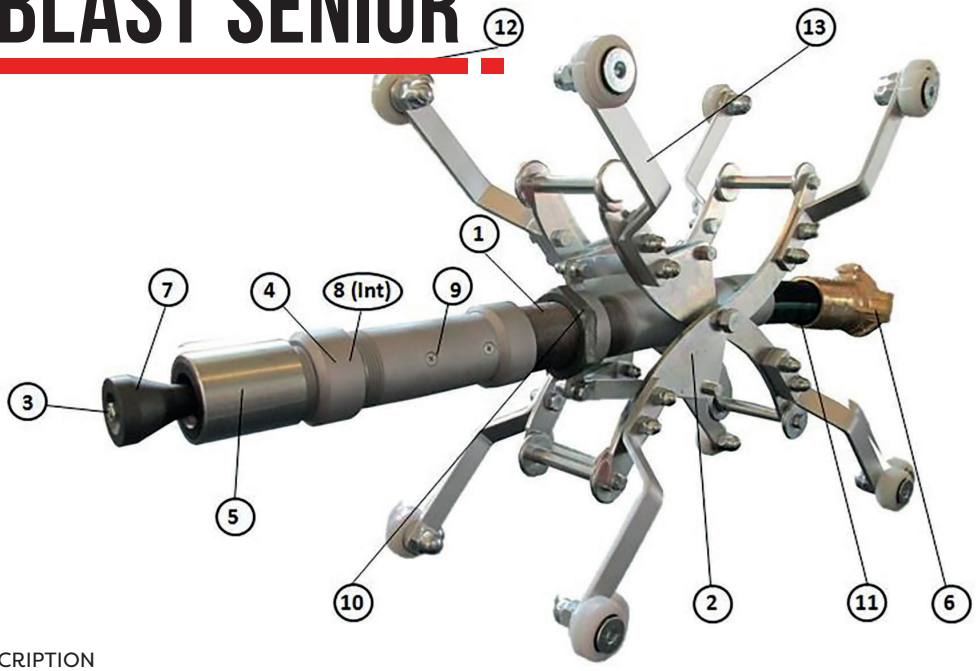

Code	pos.	Description
600183	1	Threaded central body
600185	2	Cart tuboblast senior
-	3	Nut with washer
600188	4	Threaded fitting
600187	5	Sandblasting head with deflector
200251	6	Quick coupling hose connector ø40
600186	7	Sandblasting head deflector
600217	8	Wear-resistant pad
600189	9	Threaded hose connector
600190	10	Adjustment ring
360040	11	Abrasive hose ø25x40
500163	12	Wheel ø40mm
600184	13	Extension kit for tuboplast senior trolley

TURBO TURBINE PAINT SENIOR 125

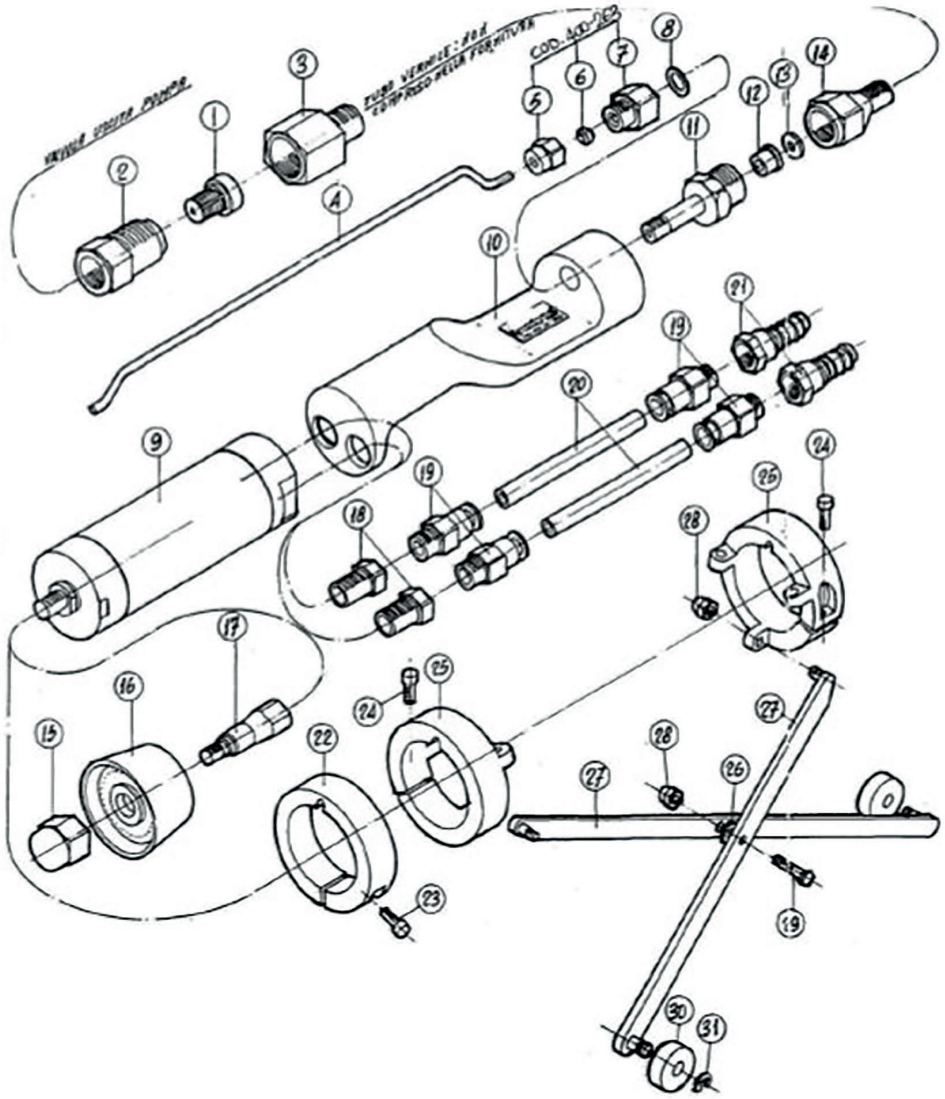

CODE	POS.	DESCRIPTION
TPS12501	1	Reed filter
TPS12502	2	Filter holder with M1/4" connection (for pump outlet valve)
TPS12503	3	Filter holder with M1/4" connection (for paint tube)
TPS12504	4	Turbine feed pipe
TPS12505	5	Connection M/F for bicone 1/8" for pipe Ø4
TPS12506	6	Bicone for tube Ø40
TPS12507	7	F1/8 point fitting"
TPS12508	8	Copper gasket
TPS12509	9	Pneumatic scooter
TPS125010	10	Support in avional
TPS125011	11	Nozzle holder M 1/8"
TPS125012	12	Cylindrical nozzle Ø21
TPS125013	13	Teflon gasket for nozzle
TPS125014	14	Locking ring for the nozzle
TPS125015	15	Hexagonal nut of turbine fixing

CODE	POS.	DESCRIPTION
TPS125016	16	Launch turbine to the cup
TPS125017	17	Support shaft for the turbine
TPS125018	18	Reduction M/F 1/4"x1/8"
TPS125019	19	Quick coupling M1/8"x8
TPS125020	20	Nylon hose 250mt
TPS125021	21	Hose
TPS125022	22	Collar
TPS125023	23	Screw M 4x14
TPS125024	24	Vite M4x14
TPS125025	25	Collar
TPS125026	26	Washer for Stainless Steel Ø4,5
TPS125027	27	Centering arms
TPS125028	28	Blind nut M4
TPS125029	29	Connecting pin for arms
TPS125030	30	Castors Ø 20
TPS125031	31	Spring Ring for Shaft Ø3,2

TURBO TURBINE PAINT SENIOR 300

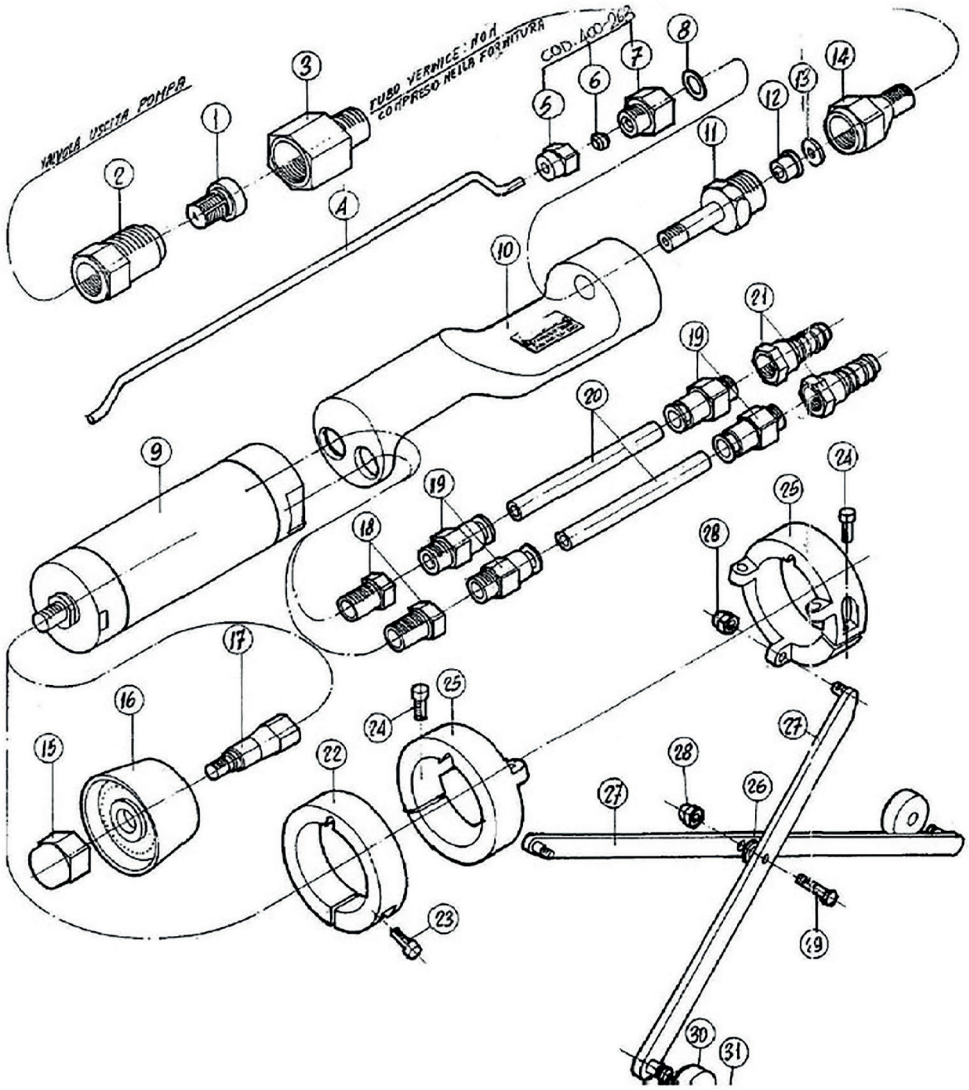

CODE	POS.	DESCRIPTION
TPS30001	1	Reed filter
TPS30002	2	Filter holder with M1/4" connection (for pump outlet valve)
TPS30003	3	Filter holder with M1/4" connection (for paint tube)
TPS30004	4	Turbine feed pipe
TPS30005	5	Connection M/F for bicone 1/8" for pipe Ø4
TPS30006	6	Bicone for tube Ø40
TPS30007	7	F1/8 point fitting"
TPS30008	8	Copper gasket
TPS30009	9	Pneumatic scooter
TPS130010	10	Support in avional
TPS130011	11	Nozzle holder M 1/8"
TPS130012	12	Cylindrical nozzle Ø21
TPS130013	13	Teflon gasket for nozzle
TPS130014	14	Locking ring for the nozzle
TPS130015	15	Hexagonal nut of turbine fixing

CODE	POS.	DESCRIPTION
TPS300016	16	Launch turbine to the cup
TPS300017	17	Support shaft for the turbine
TPS300018	18	Reduction M/F 1/4"x1/8"
TPS300019	19	Quick coupling M1/8"x8
TPS300020	20	Nylon hose 250mt
TPS300021	21	Hose
TPS300022	22	Collar
TPS300023	23	Screw M 4x14
TPS300024	24	Vite M4x14
TPS300025	25	Collar
TPS300026	26	Washer for Stainless Steel Ø4,5
TPS300027	27	Centering arms
TPS300028	28	Blind nut M4
TPS300029	29	Connecting pin for arms
TPS300030	30	Castors Ø20
TPS300031	31	Spring Ring for Shaft Ø3,2

TURBINE HOLLOBLAST

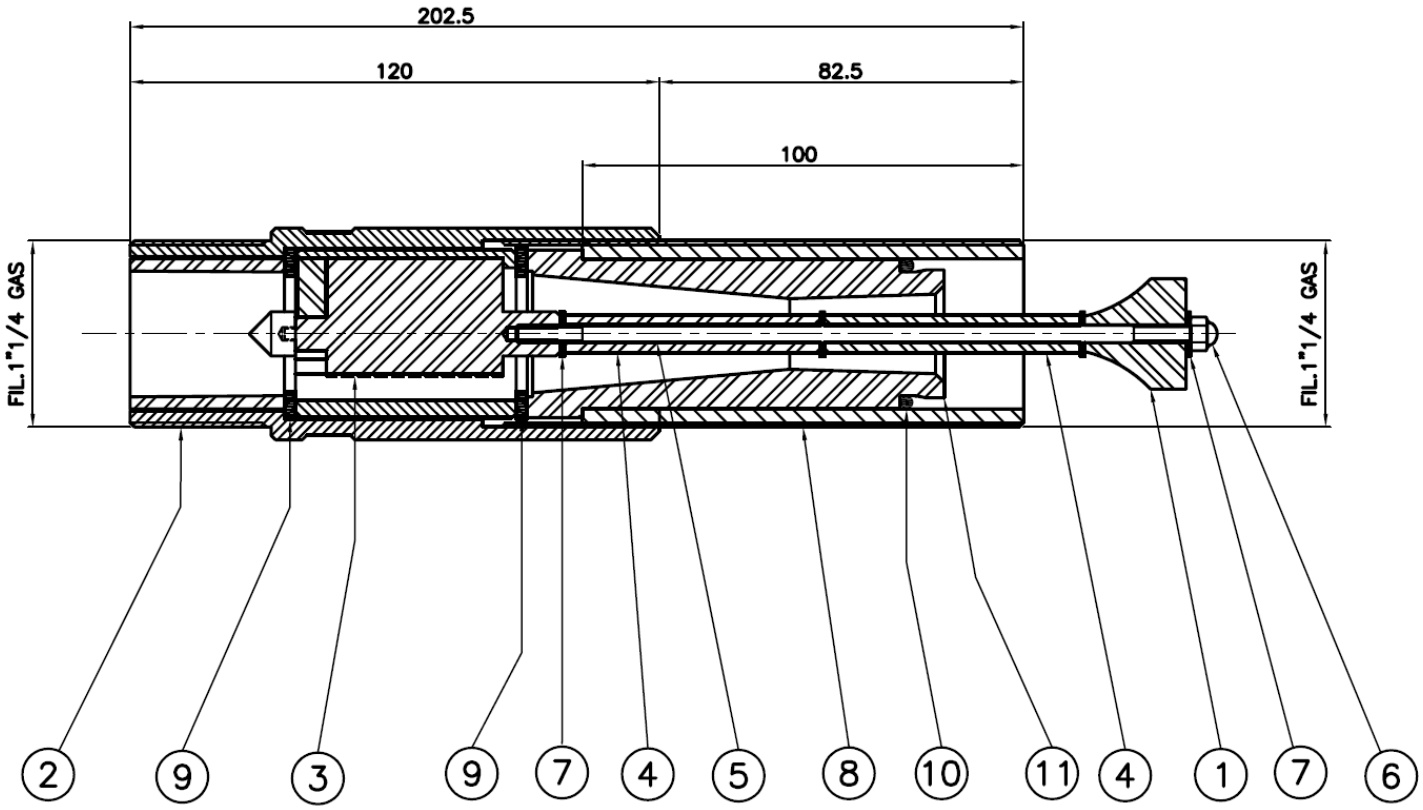

POS.	CODE	DESCRIPTION
1	57093107	TC Diffuser
2	57093101	Support
3	57093103	TC Deflector
4	57093106	TC Extension
5	57093105	Main shaft
6	57093111	Diffuser nut
7	57093109	Copper washer ø4,3
8	57093102	Sleeve 1 1/4" FE
9	57093108	Washer
10	57093110	O-ring 4112

AT 2EPR - AT2ESS - AT2ASS

AT2EPR

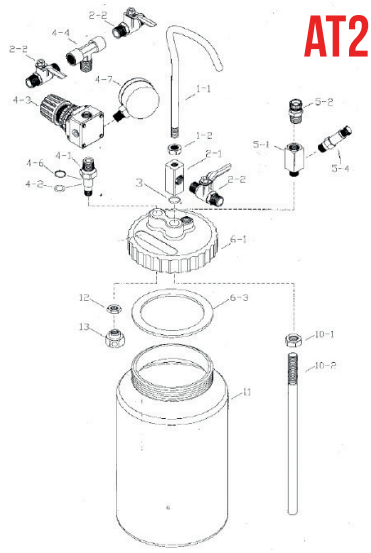

Code	pos.	Description
RT2E011	11	Tank
RT2E061	6-1	Cover
RT2E063	6-3	Cover gasket
RT2E102	10-2	Hose
RT2E101	1-1	Handle
RT2E012	1-2	Nut
RT2E021	2-1	Nipple
RT2E111	10-1	Nut
RT2E013	13/12	Return valve
RT2E054	5-4	Safety valve
RT2E022	2-2	Ball valve, BP
RT2E052	5-2	Exhaust valve
RT2E043	4-3	Regulator
RT2E047	4-7	Pressure gauge
RT2E044	4-4	T-fitting

AT2ESS

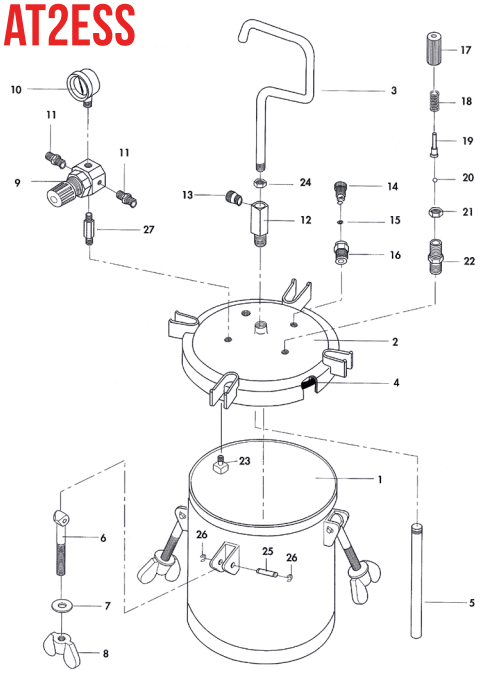

Code	pos.	Description
AT2ES01	1	Tank
AT2ES02	2	Cover
AT2ES03	3	Handle
AT2ES04	4	Cover gasket
AT2ES05	5	Hose
AT2ES06	6	Screw lid
AT2ES07	7	Washer
AT2ES08	8	Butterfly knob
AT2ES09	9	Regulator
AT2ES10	10	Pressure gauge
AT2ES11	11	Nipple
AT2ES12	12	Extension
AT2ES13	13	Plug
AT2ES14	14/15/16	Exhaust valve
AT2ES17	17/18/19 20/21/22	Safety valve
AT2ES23	23	Return valve
AT2ES24	24	Nut
AT2ES25	25/26	Pin and snap ring
AT2ES27	27	Extension

AT2ASS

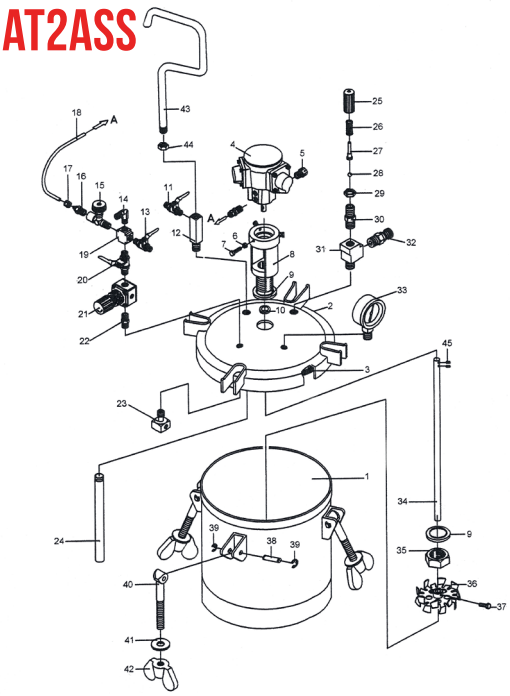

Code	pos.	Description
AT2AS01	1	Tank
AT2AS02	2	Cover
AT2AS03	3	Cover gasket
AT2AS04	4	Agitator
AT2AS05	5	Silencer
AT2AS08	8	Agitator adapter
AT2AS09	9	Gasket
AT2AS10	10	Gasket
AT2AS11	11/13/20	Ball valve, BP
AT2AS12	12	Extension
AT2AS14	14/15/16 17/18/19	Group for mixer fittings
AT2AS21	21	Regulator
AT2AS22	22/32	Nipple
AT2AS23	23	Return valve
AT2AS24	24	Tube
AT2AS25	25/26/27/28 29/30/31	Safety valve
AT2AS33	33	Pressure gauge
AT2AS34	34	Agitator shaft
AT2AS35	35	Agitator nut
AT2AS36	36/37	Propeller and screw
AT2AS38	38/39	Pin and snap ring
AT2AS40	40	Screw lid
AT2AS41	41	Washer
AT2AS42	42	Butterfly knob
AT2AS43	43/44	Handle and nut

AT5ESS - AT5ASS

AT5ESS

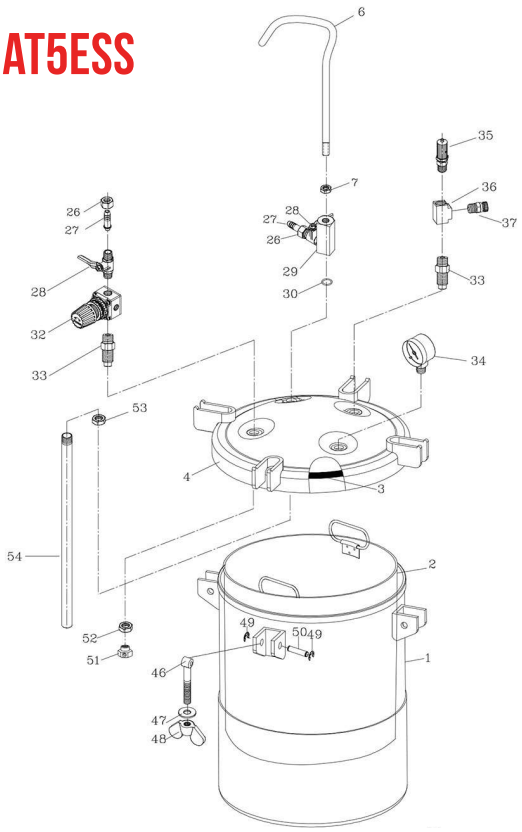

AT5ASS

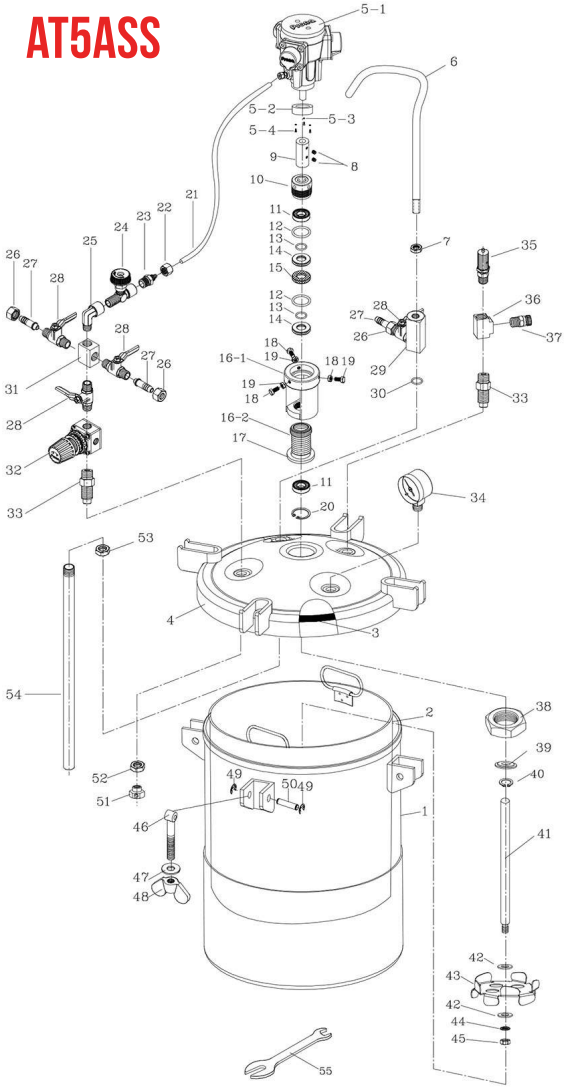

Code	pos.	Description
RT5001	1	Tank
RT5002	2	S.Steel 5L bucket
RT5003	3	Cover Gasket
RT5004	4	Cover
RT5501	5-1	Air Motor M10
RT5502	5-2	Air motor base M10
RT5503	5-3	Gasket Spring
RT5504	5-4	Fixing Screw
RT5006	6	Handle
RT5007	7	Handle Screw
RT5008	8	Fixing Grain M8x6
RT5009	9	Agitator connector
RT5010	10	Nut
RT5011	11	Pad
RT5012	12	External O-ring
RT5013	13	Internal O-ring
RT5014	14	Gaskets holder
RT5015	15	PTFE Gasket
RT5161	16-1	Motor agitator support
RT5162	16-2	Agitator support
RT5017	17	Agitator support gasket
RT5018	18	Agitator support Screw
RT5019	19	Support
RT5020	20	C-Ring
RT5022	22	Air fitting Nut
RT5023	23	Air fitting
RT5024	24	Pin regulation valve
RT5025	25	Elbow
RT5028	28	Valve
RT5029	29	Fluid fitting
RT5030	30	O-ring 11*1
RT5031	31	4-way lock
RT5032	32	Air regulator
RT5033	33	Connector
RT5034	34	Air pressure gauge
RT5035	35	Safety valve
RT5036	36	3-way lock
RT5037	37	Exhasut valve
RT5038	38	Motor base nut
RT5039	39	Motor base gasket
RT5040	40	C-ring
RT5041	41	Agitator shaft
RT5042	42	Washer
FB106I	43	Agitator propeller
RT5044	44	Washer
RT5045	45	Nut
RT5046	46	Closing tank pin
RT5047	47	Closing tank Washer
RT5048	48	Butterfly knob
RT5049	49	Tank pin Seeger
RT5050	50	Pun
RT5051	51	Air block
RT5052	52	Block Nut
RT5053	53	Nut
RT5054	54	Suction hose

AT10EPR - AT10APR

AT10EPR

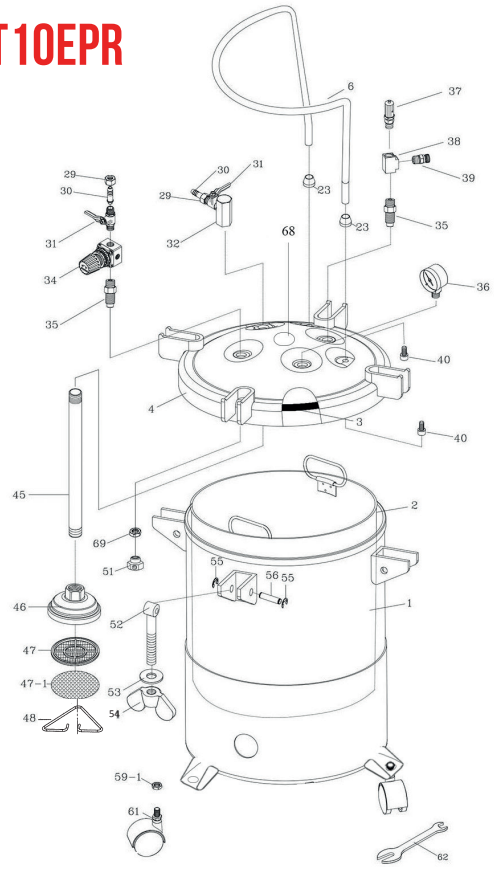

AT10APR

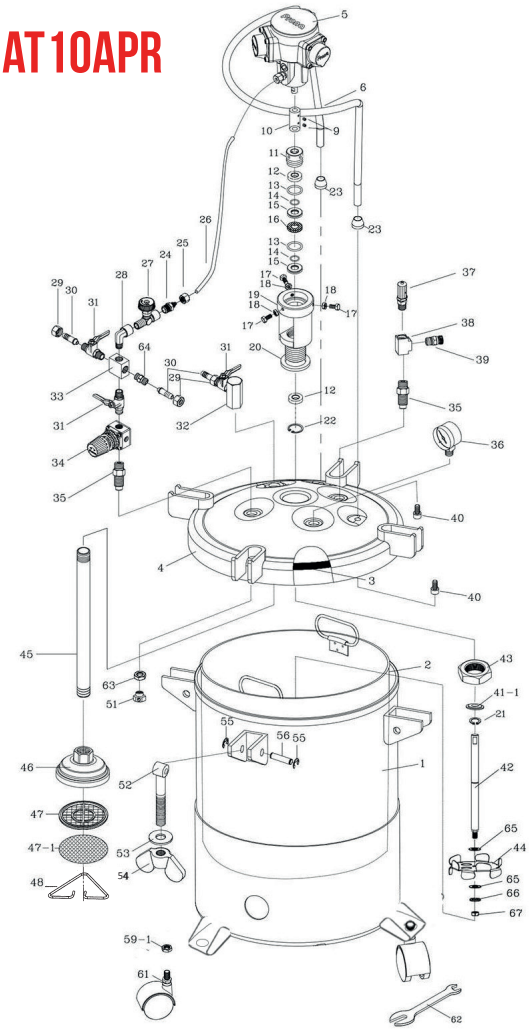

Code	pos.	Description
RT1A01	1	External tank
RT1A02	2	S.Steel 10 lt Bucket
RT1A03	3	Cover gasket
RT1A04	4	Cover
RBFAR01	5	Air motor M30
RT1A06	6	Handle
RT1A09	9	Fixing Grain M8x6
RT1A10	10	Agitator connector
RT1A11	11	Sealing nut
RT1A12	12	Pad
RT1A13	13	O-ring
RT1A14	14	O-ring
RT1A15	15	Sealing gaskets
RT1A16	16	PTFE Gasket
RT1A17	17	Agitator Support Screw
RT1A18	18	Support Nut
RT1A19	19	Agitator motor support
RT1A20	20	Agitator support connector
RT1A21	21	C-Ring
RT1A22	22	C-Ring
RT1A23	23	Handle guide
RT1A24	24	Air fitting
RT1A25	25	Air fitting Nut
RT1A27	27	Pin regulation
RT1A28	28	Elbow
RT1A29	29	Fluid fitting Nut
RT1A30	30	Fluid fitting
RT1A31	31	Valve
RT1A32	32	Fluid exit extension
RT1A33	33	4-way Lock
RT5032	34	Air regulator
RT1A35	35	Connector
RT1A36	36	Air pressure gauge
RT1A37	37	Safety valve
RT1A38	38	3-way block
RT1A39	39	Exhaust valve
RT1A40	40	Safety Screw
RT1A41	41-1	Motor base gasket
RT1A42	42	Agitator shaft
RT1A43	43	Nut
FB106I	44	Agitator propeller
RT1A45	45	Suction hose
RT1A46	46	Bell suction
RT1A47	47	Filter 1
RT1A71	47-1	Filter 2
RT1A48	48	Filter Spring
RT1A51	51	Air block
RT1A52	52	Closing tank pin
RT1A53	53	CLosing Tank Washer
RT1A54	54	Butterfly knob
RT1A55	55	Tank pin Seeger
RT1A56	56	Tank pin
RT1A61	59-1+61	Complete wheel
RT1A63	63	Nut block
RT1A65	65	Washer
RT1A66	66	Spring Washer
RT1A67	67	Nut
RT1E68	68	Model E Handle and nut

AT10MPR

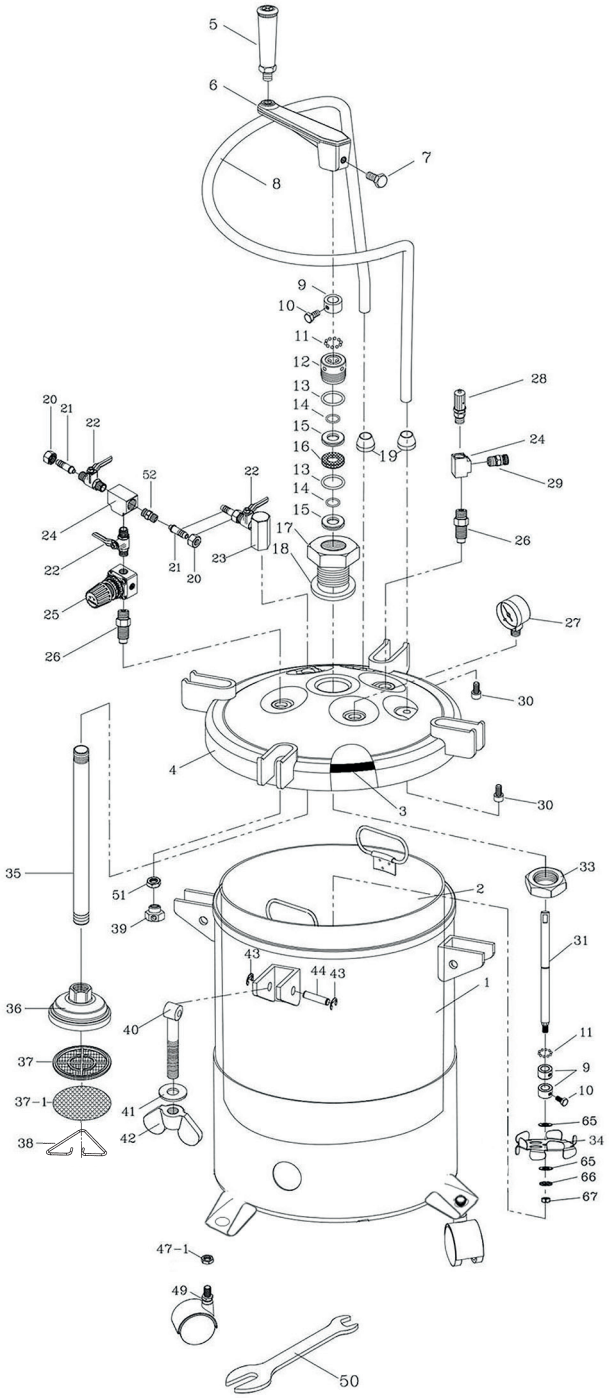

Code	pos.	Description
RT1A01	1	External tank
RT1A02	2	S.Steel 10 lt Bucket
RT1A03	3	Cover gasket
RT1A04	4	Cover
RT1M05	5	Manual agitator handle
RT1M06	6	Manual agitator support
RT1M07	7	Manual agitator Screw
RT1A06	8	Handle
RT1M09	9	Sealing locknut
RT1M10	10	Screw
RT1M11	11	Steel grain
RT1M12	12	Sealing Nut
RT1M13	13	O-ring
RT1M14	14	O-ring
RT1M15	15	Sealing
RT1M16	16	PTFE Gaskets
RT1M17	17	Manual agitator support
RT1M18	18	Agitator support Screw
RT1A20	20	Agitator support connector
RT1A30	21	Fluid fitting Nut
RT1A31	22	Valve
RT1A32	23	Extension
RT1A38	24	3-way block
RT5032	25	Air regulator
RT1A29	20	Fluid fitting
RT1A21	21	C-ring
RT1A22	22	C-ring
RT1A23	23	Handle guide
RT1A24	24	Air fitting
RT1A35	26	Connector
RT1A36	27	Air pressure gauge
RT1A37	28	Safety valve
RT1A39	29	Exhaust valve
RT1A40	30	Safety Screw
RT1A27	27	Pin regulation
RT1A28	28	Elbow
RT1M31	31	Manual agitator shaft
RT1M33	33	Manual agitator base Nut
FB106I	34	Agitator propeller
RT1A33	33	4-way block
RT1A45	35	Suction hose
RT1A46	36	Bell suction
RT1A47	37	Filter 1
RT1A71	37-1	Filter 2
RT1A48	38	Filter sealing Spring
RT1A51	39	Air block
RT1A52	40	Closing tank pin
RT1A53	41	Washer
RT1A54	42	Butterfly knob
RT1A55	43	Tank pin Seeger
RT1A56	44	Tank pin
RT1A61	47-1+49	Complete wheel
RT1M50	50	Key
RT1A63	51	Nut
RT1A65	65	Washer
RT1A66	66	Spring washer
RT1A67	67	Nut

AT 20/40/60 EPR - APR - MPR

AT20EPR

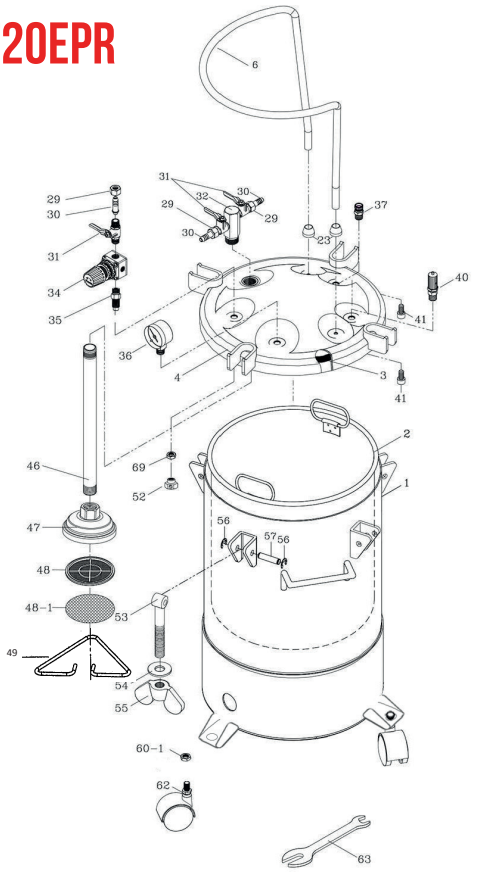

AT20APR

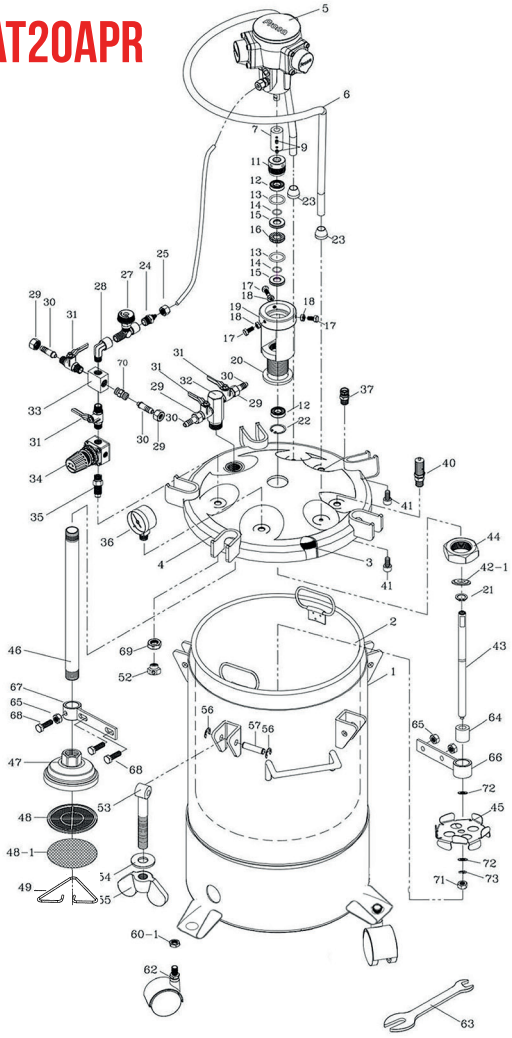

Code	pos.	Description
RT2A02	2	S.Steel bucket 20 lt
RT4A02	2	S.Steel bucket 40 lt
RT6A02	2	S.Steel bucket 60 lt
RT2A03	3	Cover Gasket 20 lt
RT6A03	3	Cover Gasket 40 - 60 lt
RBFAR01	5	Air Motor M30
RT2A06	6	Handle 20 lt
RT6A06	6	Handle 40 - 60 lt
RT2A07	7	Agitator connector
RT2A09	9	Fixing grain
RT2A11	11	Sealing Nut
RT2A12	12	Pad
RT2A13	13	O-ring
RT2A14	14	O-ring
RT2A15	15	Gasket
RT2A16	16	PTFE Gasket
RT2A17	17	Agitator support Screw
RT2A18	18	Nut
RT2A19	19	Motor agitator support
RT2A20	20	Support agitator connector
RT2A21	21	C-ring
RT2A22	22	C-ring
RT2A23	23	Handle Guide
RT1A24	24	Air fitting
RT1A25	25	Air fitting Nut
RT1A27	27	Pin regulation
RT1A28	28	Elbow
RT1A29	29	Fluid fitting Nut
RT1A30	30	Fluid fitting
RT1A31	31	Valve
RT2A32	32	Exit fluid extension
RT1A33	33	4-way block
RT5032	34	Air regulator
RT1A35	35	Connector
RT1A36	36	Air pressure gauge
RT2A37	37	Exhaust valve
RT1A37	40	Safety valve
RT1A40	41	Safety Screw
RT2A42	42-1	Base motor gasket
RT2A43	43	Agitator rod 20 lt
RT4A43	43	Agitator rod 40 lt
RT6A43	43	Agitator rod 60 lt
RT2A44	44	Base motor Nut
FB106I	45	Agitator propeller
RT2A46	46	Suction hose 20 lt
RT4A46	46	Suction hose 40 lt
RT6A46	46	Suction hose 60 lt
RT2A47	47	Bell suction
RT2A48	48	Filter 1
RT2A81	48-1	Filter 2
RT2A49	49	Filter Spring
RT2A52	52	Air block
RT2A53	53	Closing tank Pin
RT2A54	54	Closing tank Washer
RT2A55	55	Butterfly knob
RT2A56	56	Tank Pin Seeger
RT2A57	57	Tank Pin
RT2A62	60-1+62	Complete wheel
RT2A64	64	Suction ring and agitator rod
RT2A65	65+66+67+68	Internal spacer
RT2A69	69	Block Nut
RT2A71	71	Nut
RT2A72	72	Washer
RT2A73	73	Washer Spring
RT2E74		EPR Cap and Nut
RT2M75		MPR Model Complete Manual Agitator

AT 20/40/60 GPR

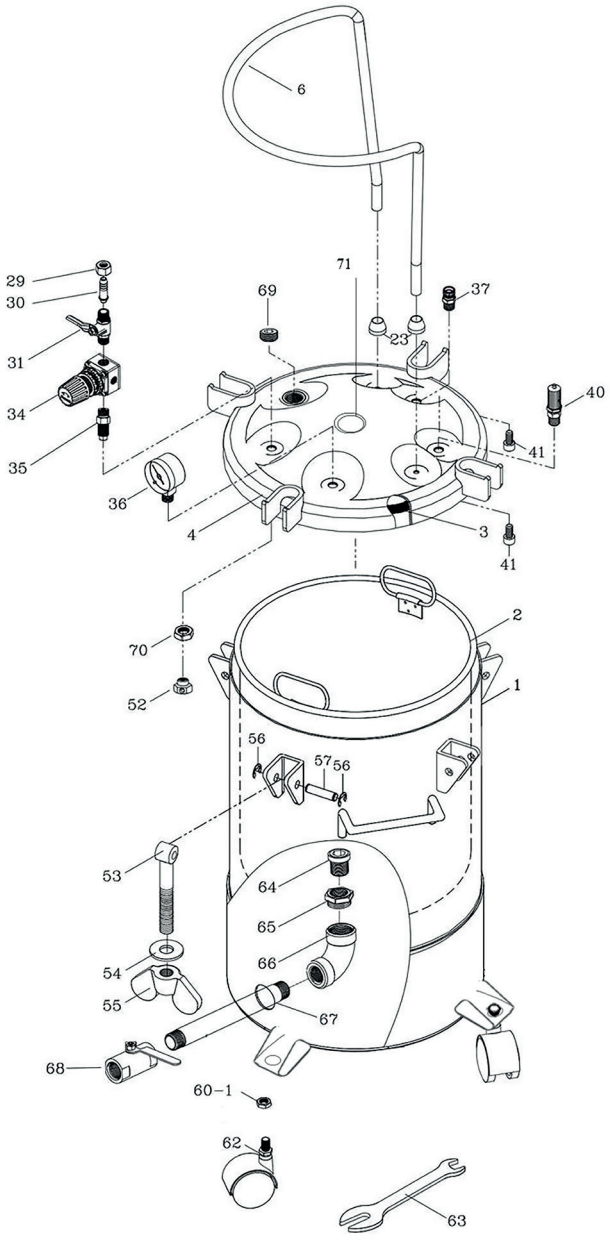

Code	pos.	Description
RT2A03	3	Cover Gasket 20 lt
RT6A03	3	Cover Gasket 40 - 60 lt
RT2A06	6	Handle 20 lt
RT6A06	6	Handle 40 - 60 lt
RT2A23	23	Handle Guide
RT1A29	29	Fluid fitting Nut
RT1A30	30	Fluid fitting
RT1A31	31	Valve
RT5032	34	Air regulator
RT1A36	36	Air pressure gauge
RT2A37	37	Exhaust valve
RT1A37	40	Safety valve
RT1A40	41	Safety Screw
RT2A52	52	Air block
RT2A53	53	Closing tank pin
RT2A54	54	Closing tank Washer
RT2A55	55	Butterfly knob
RT2A56	56	Closing tank Seeger
RT2A57	57	Pin tank
RT2A62	60-1+62	Complete wheel
RT2G64	64	Internal tank fitting
RT2G65	65	Nut
RT2G66	66	Elbow
RT2G67	67	Inferior output extension
RT2G68	68	Inferior output valve 3/4"
RT2G69	69	Cap
RT2E74		Cap & Nut EPR model

AT 10 ESPR - ASPR

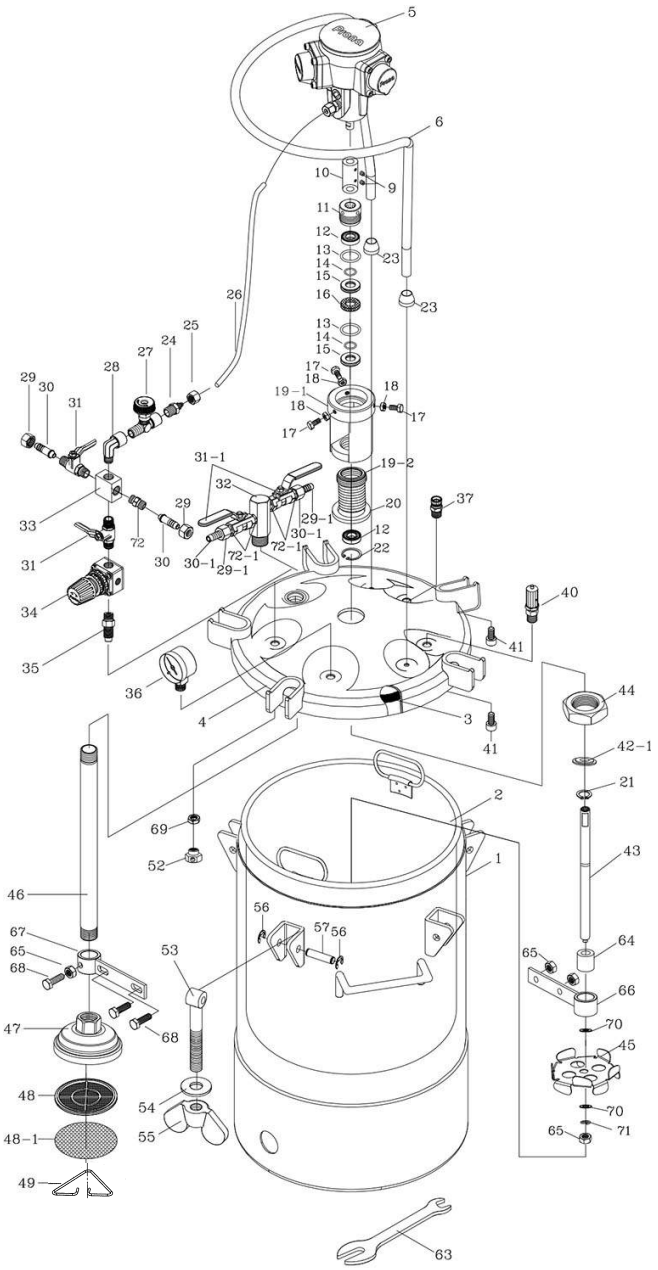

Code	pos.	Description
RT1A02	2	S.Steel Bucket 10 lt
RT1A03	3	Cover Gasket
RT1S05	5	Chromed Air Motor M30
RT1A06	6	Handle
RT1A09	9	Fixing Grain M8x6
RT1A10	10	Agitator Connector
RT1A11	11	Nut
RT1A12	12	Pad
RT1A13	13	External O-ring
RT1A14	14	Internal O-ring
RT1A15	15	Gasket sealing
RT1A16	16	PTFE Gasket
RT1A17	17	Agitator screw support
RT1A18	18	Nut
RT1S91	19-1	Agitator motor support
RT1S92	19-2	Motor support sealing
RT1A20	20	Agitator support connector
RT1A21	21	C-type ring
RT1A22	22	C-type ring
RT1A23	23	Handle Guide
RT1A24	24	Air fitting
RT1A25	25	Air fitting Nut
RT1A27	27	Pin Regulation
RT1A28	28	Elbow
RT1A29	29	Fluid fitting Nut
RT1S29	29-1	S.Steel Fluid Fitting Nut
RT1A30	30	Fluid Fitting
RT1S30	30-1	S.Steel fluid fitting
RT1A31	31	Valve
RT1S31	31-1	S.steel valve
RT1A32	32	Fluid output extension
RT1A33	33	4-way block
RT5032	34	Air regulator
RT1A35	35	Connector
RT1A36	36	Air pressure gauge
RT1A37	37	Safety valve
RT1A38	38	Three-way block
RT1A39	39	Exhaust valve
RT1A40	40	Safety Screw
RT1A41	41-1	Base motor gasket
RT1A42	42	Agitator rod
RT1A43	43	Motor base Nut
FB106I	44	Agitator propeller
RT1S45	45	Suction hose
RT1S46	46	Suction bell
RT1A47	47	Filter 1
RT1A71	47-1	Filter 2
RT1A48	48	Filter sealing Spring
RT1A51	51	Air block
RT1S52	52	Closing tank pin
RT1A53	53	Closing tank Washer
RT1S54	54	Butterfly knob
RT1A55	55	Tank pin Seeger
RT1A56	56	Tank pin
RT1A63	63	Block Nut
RT1A65	65	Washer
RT1A66	66	Washer

AT 20/40 ESPR - ASPR

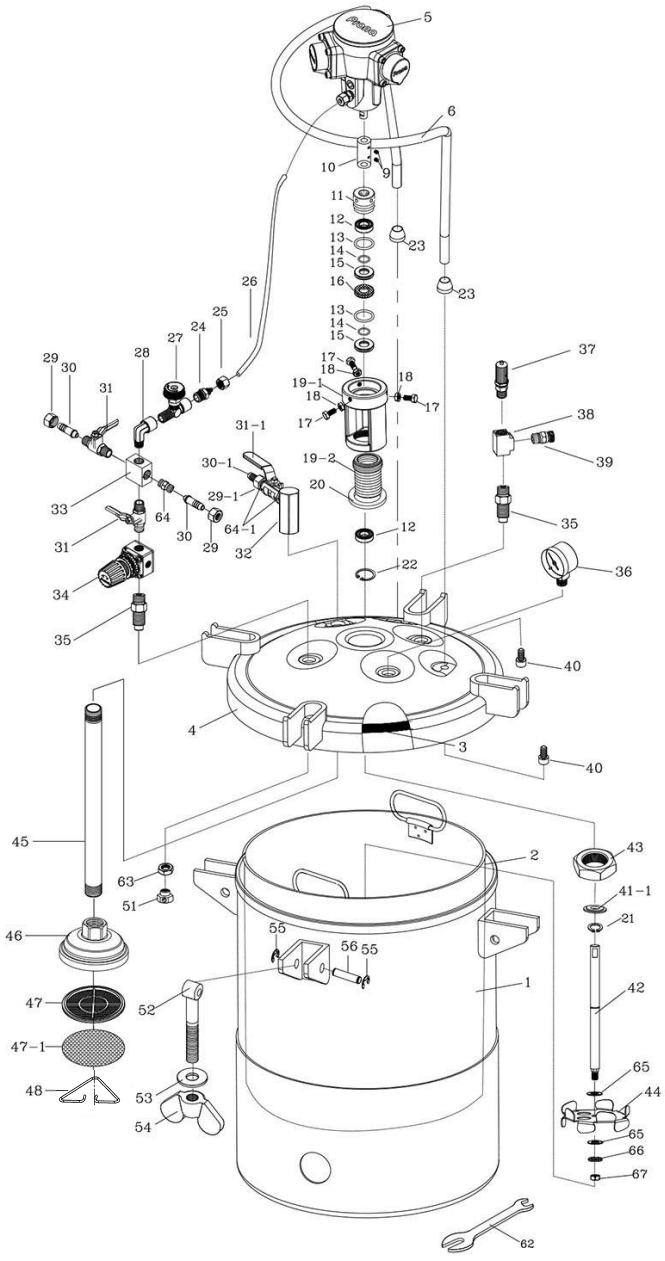

Code	pos.	Description
RT2A03	3	Cover Gasket 20 lt
RT6A03	3	Cover Gasket 40 - 60 lt
RT1S05	5	Chromed air motor M30
RT2A06	6	Handle 20 lt
RT6A06	6	Handle 40 - 60 lt
RT2A07	7	Agitator connector
RT2A09	9	Fixing Grain
RT2A11	11	Sealing Nut
RT2A12	12	Pad
RT2A13	13	External O-ring
RT2A14	14	Internal O-ring
RT2A15	15	Gasket sealing
RT2A16	16	PTFE Gasket
RT2A17	17	Agitator support Screw
RT2A18	18	Support Nut
RT2S91	19-1	Agitator motor support
RT2S92	19-2	Motor support sealing Nut
RT2A20	20	Agitator support connecotr
RT2A21	21	C-type ring
RT2A22	22	C-type ring
RT2A23	23	Handle Guide
RT1A24	24	Air fitting
RT1A25	25	Air fitting Nut
RT1A27	27	Pin Regulation
RT1A28	28	Elbow
RT1A29	29	Air fitting Nut
RT1S29	29-1	S.Steel Fluid fitting Nut
RT1A30	30	Fluid fitting
RT1S30	30-1	S.steel Fluid fitting
RT1A31	31	Valve
RT1S31	31-1	S.steel Valve
RT2A32	32	Fluid Output Extension
RT1A33	33	4-way block
RT5032	34	Air regulator
RT1A35	35	Connector
RT1A36	36	Air pressure gauge
RT2A37	37	Exhaust valve
RT1A37	40	Safety Valve
RT1A40	41	Safety Screw
RT2A42	42-1	Base motor Gasket
RT2A43	43	Agitator rod 20 lt
RT4A43	43	Agitator rod 40 lt
RT6A43	43	Agitator rod 60 lt
RT2A44	44	Base motor Nut
FB106I	45	Agitator Propeller
RT2S46	46	Suction hose 20 lt
RT4S46	46	Suction hose 40 lt
RT6S46	46	Suction hose 60 lt
RT2S47	47	Suction bell
RT2A48	48	Filter 1
RT2A81	48-1	Filter 2
RT2A49	49	Filter Sealing Spring
RT2A52	52	Air block
RT2S53	53	Closing Tank Pin
RT2A54	54	Closing tank Washer
RT2S55	55	Butterfly Knob
RT2A56	56	Tank pin Seeger
RT2A57	57	Tank Pin
RT2A64	64	Suction Ring and agitator rod
RT2S65	65+66+67+68	Spacer
RT2A69	69	Block Nut
RT2A72	70	Washer

LP 400 - LP 500

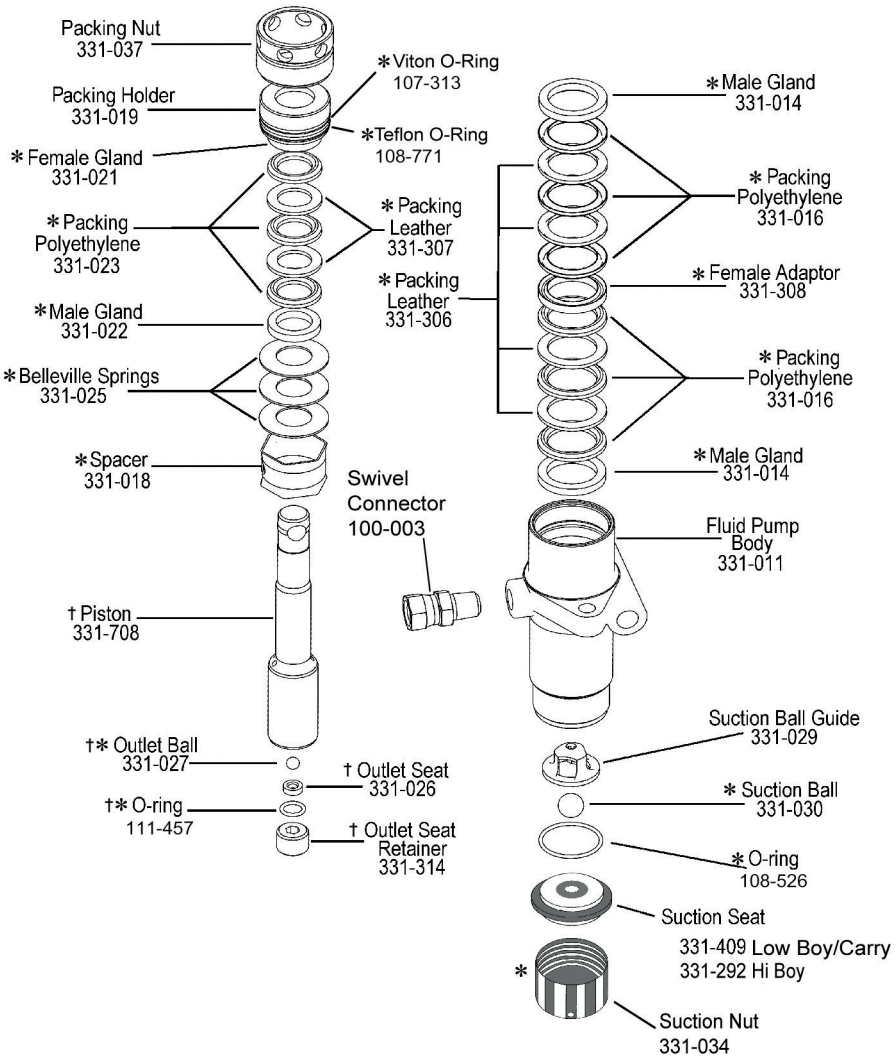

Code	Description
100-003	Adapter
107-313	PTFE O-Ring
108-771	Viton O-Ring
108-528	O-Ring
331-011	Fluid Pump Body
331-014	Male Gland
331-016	Inferior PTFE gasket
331-018	Spacer
331-019	Packing holder
331-021	Female gland
331-022	Male gland
331-023	Superior PTFE gasket
331-025	Spring washer
331-026	Ball seats
331-027	Compression sphere
331-029	Ball guide
331-030	Sphere intake
331-034	Suction nut
331-037	Push ring seals
111-457	O-Ring
331-492	Motor LP400 220V

Code	Description
331-292	Intake valve seat Hi Boy
331-306	Leather bottom seal
331-307	Leather upper seal
331-308	Central spacer
331-314	Push male seals
331-409	Intake valve seat Lo Boy / Carry
331-708	Piston
331-093	† Complete Piston
331-210	* Seal kit complete
331-217	Suction Filter Lo Boy / Carry
141-008	Suction Filter Hi Boy
100-180	Relief valve
331-396-99	Control board
331-311	Switch
331-297	Potentiometer
331-184	Spacer potentiometer
117-044	Rotary potentiometer
331-294-99	Sensor
331-305-99	LCD kit
301-084A	Motor protection 10A
331-492	Motor LP500 220V

LP 600 - LP 700

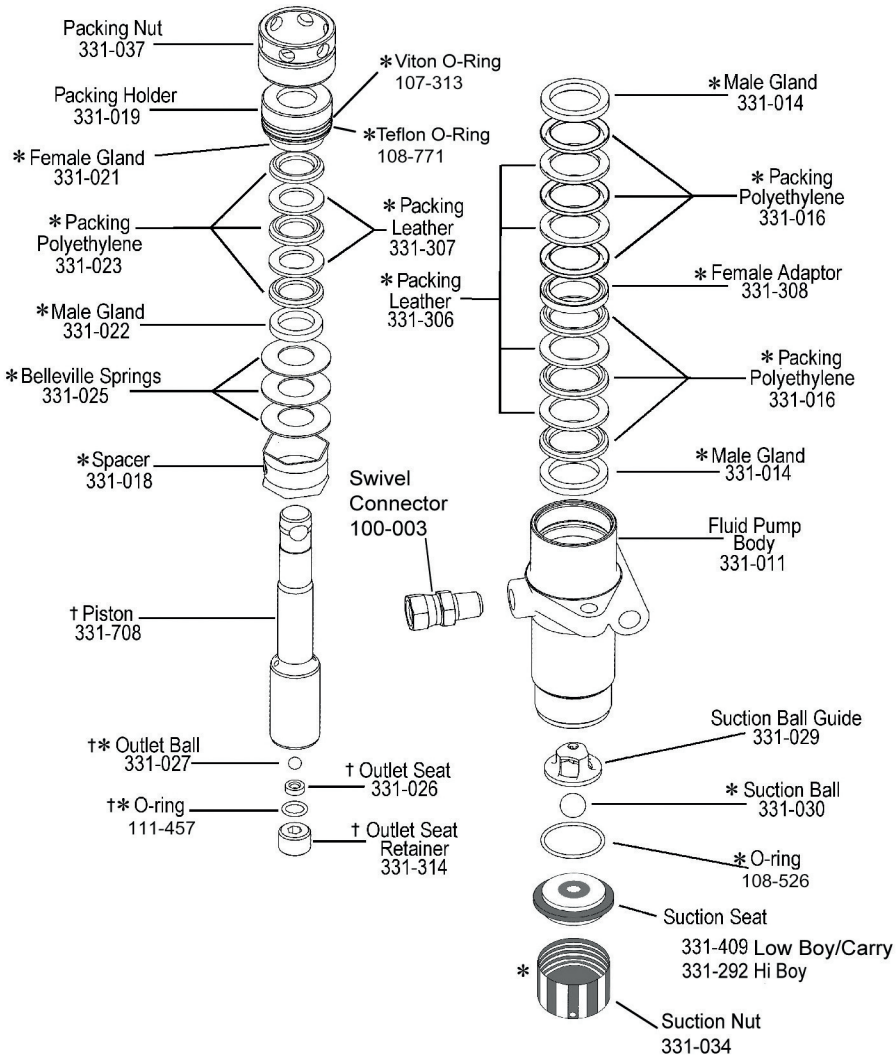

Code	Description
100-003	Adapter
107-313	PTFE O-Ring
108-771	Viton O-Ring
108-528	O-Ring
331-011	Pumping naked
331-014	Push gaskets
331-016	PTFE seal less
331-018	Spacer
331-019	Packing holder
331-021	Female gland
331-022	Male gland
331-023	Polyethylene packing
331-025	Belleville Springs
331-026	Outlet seat
331-027	Outlet ball
331-029	Ball guide
331-030	Suction ball
331-034	Suction nut
331-037	Push ring seals
111-457	O-Ring
331-493	Motor LP600 220V

Code	Description
331-292	Intake valve seat Hi Boy
331-306	Leather packing
331-307	Leather packing
331-308	Female adaptor
331-314	Male gland
331-409	Intake valve seat Lo Boy / Carry
331-708	Piston
331-093	† Complete piston
331-210	* Seal kit complete
331-217	Suction filter Lo Boy / Carry
141-008	Suction filter Hi Boy
100-180	Relief valve
331-396-99	Control board
331-311	Switch
331-297	Potentiometer
331-184	Spacer potentiometer
117-044	Rotary potentiometer
331-294-99	Sensor
331-305-99	LCD kit
301-084A	Motor protection 10A
331-493	Motor LP700 220V

SL 800 - SL 1100

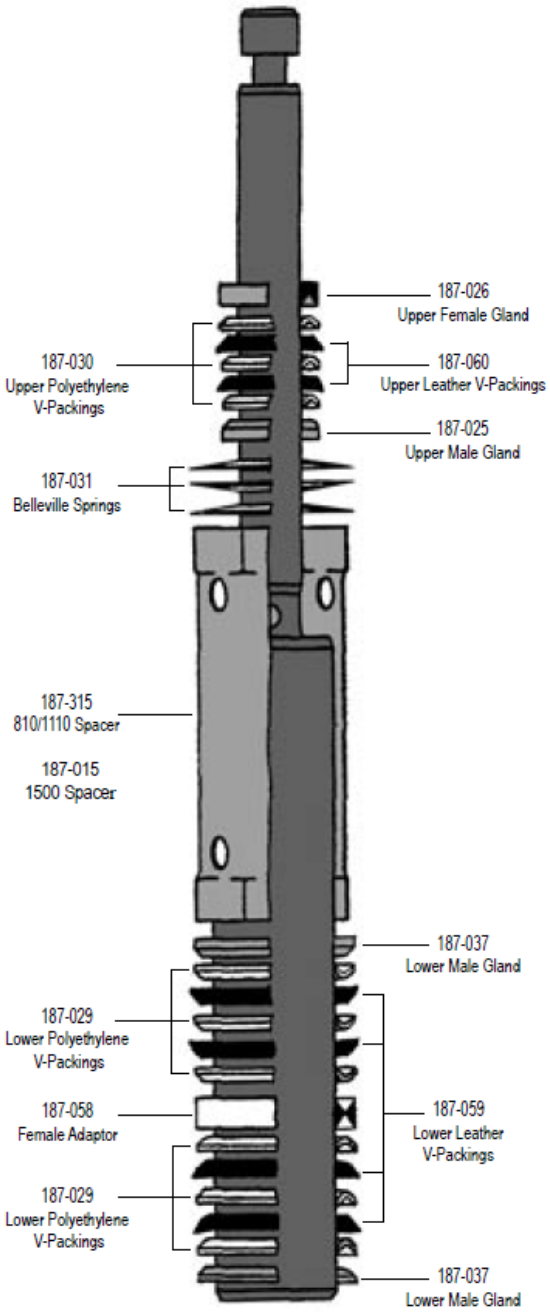

Code	Description
187-025	Male gland
187-026	Female gland
187-029	PTFE seal less
187-030	PTFE top seal
187-031	Spring Washer
187-037	Male gland
187-058	Female adaptor
187-059	Leather packing
187-060	Upper leather gasket
187-315	Spacer SL 810/1100
187-040	Pump Seal Kit
187-330-99	Piston Kit
141-010	Suction filter

Code	Description
100-180	Relief valve
866-229	Motor SL 1100
866-226	Motor SL 800
301-364-99	Control board
301-083	Switch
331-297	Potentiometer
331-184	Spacer potentiometer
117-044	Rotary potentiometer
331-294-99	Sensor
331-305-99	LCD Kit
301-084A	Motor protection switch 10A SL 800 - SL 1100

HSS 9000 - HSS 11000

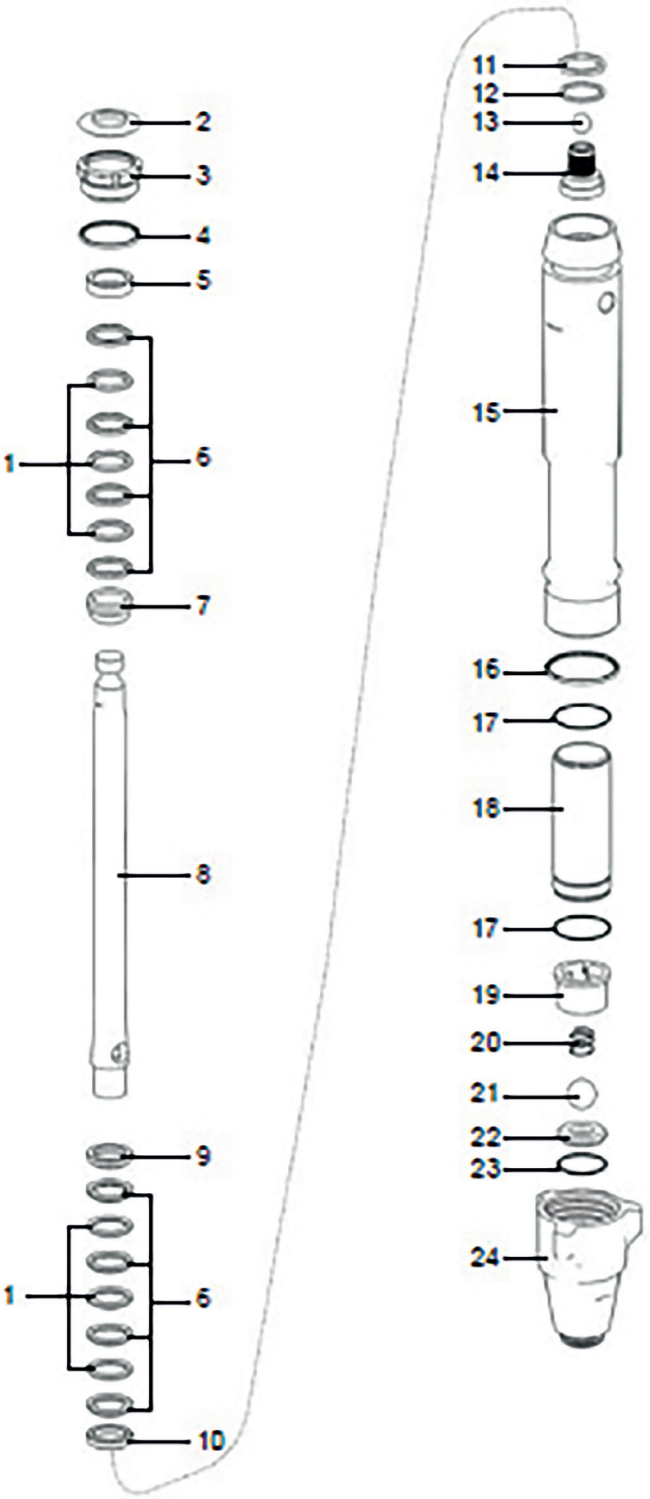

POS.	CODE	DESCRIPTION
1*	198-718	Leather gasket
2*	112-590	Upper female gland
3	15J792	Packing nut
4*	157-195	O-Ring
5	15G657	female seal carriers
6*	198-701	Polyethylene packing
7*	15G658	Male gland
8	16C205	Piston
9*	189-585	Male gland
10*	189-588	Female gland
11*	119-636	Wiper
12*	15F183	Washer
13*	107-203	Ceramic ball
14	249-177	Compression valve
15	16C204	Cylinder
16*	160-325	O-Ring
17*	108-822	O-Ring
18	244-975	Sleeve
19	198-505	ball Guide
20	249-770	Spring
21*	107-167	ceramic ball
22*	193-395	ball seats
23	107-098	O-Ring
24	15A303	Foot
*	246-341	Repair kit

JAFE 10 - 30

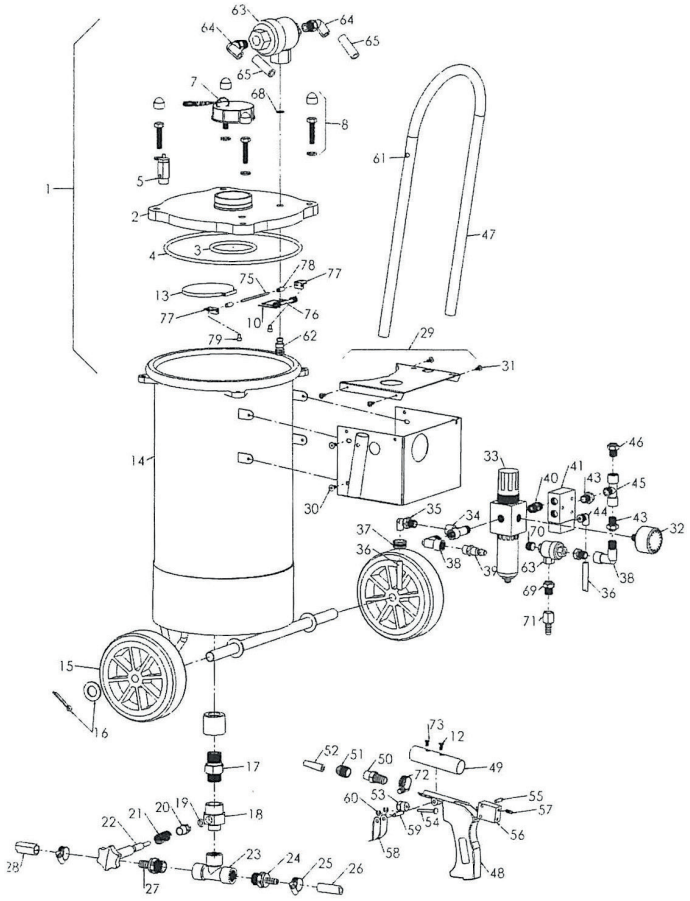

POS.	CODE	DESCRIPTION
1	52057	Mounted lid
2	52056	Lid finished
3	550571B	Junta Torica (1UD.)
4	52007B	Gasket
5	55021B	Safety valve
6	52054	Complete plug
7	52055	Complete set of screws (4UD.)
8	52004B	Spring (1UD.)
9	52005B	Screw max10 (2Ud.)
10	52026MB	Mechanized filling cap
11	52CUERAREN10B	Welded sandblaster body
12	5504112	Fixed wheel (2UD.)
13	52067	Washer (2UD.) + Pin (2UD.)
14	52052B	Crazy nut 1/2
15	52039B	Regulating body
16	520171B	Board (1UD.)
17	52040B	Support piece
18	52019B	Wharf
19	52066B	Product output regulator
20	52049B	T 1/2H-1/2H-1/2H
21	52020B	Fitting 1/2M to tang 9
22	30151B	Clamp (2UD.)
23	52105B	Hose 8x15 black
24	52021B	Fitting 1/2M to spike 12
25	52079	Hose 13x20
26	52060	Whole box
27	52011B	Allen screw (4UD.)
28	52010B	Screw thread plate (4UD.)
29	52064B	Gauge 0-6 Bar 4
30	52063B	Filter regulator with purifier 1/4H
31	55222B	T 1/4H-1/4M-1/4H lateral
32	52013B	Rotating elbow 1/a A4
33	52078	2x4 double polyamide pipe
34	52065B	Plastic flange (10UD.)
35	55051B	Elbow 90° 1/4M-1/4H
36	10CR1/4MBLISTER	Cr 1/4M (2UD.)
37	550091B	Racord 1/4M (1UD.)
38	52014B	Valve valve 3/2
39	11051/41/4H	Reduction 1/4M-1/4H
40	52015B	Rotating elbow 1/8 A4
41	52012B	T 1/4H-1/4M-1/4H central
42	52016B	Racord 1/4 A8
43	52038B	Carrying handle (with pins)
44	50JAFEARENB	Body of blasting gun
45	52048B	Tube
46	52047B	Racord 1/4G
47	52048B	Cup holder
48	5202425B	Carbide nozzle 2.5 mm
49	52043B	Support nut
50	52044B	Pusher
51	52045B	Pin holder
52	52022B	Valve
53	52023B	Racord M5 to tube 4
54	50068B	Trigger
55	50067	Shaft Trigger Mount (10UD.)
56	50006	Sejer mounting ring (10UD.)
57	55115B	Handle pin
58	52075B	Air distributor
59	52073B	Quick discharge valve 1/8
60	52074B	Rotating elbow 1/8 A8
61	52076B	Polyurethane tube 6x8
62	50057JUNTA	Board
63	11111/81/4L	1/8M-1/4M splice
64	55258B	Tapon 1/8
65	10M91BLISTER	Adapter 1/4H (2UD.)
66	52077B	Clamp 20x23
67	52086B	Screw max8 (2UD.)
68	52115B	Filling cap shaft
69	52116B	Shaft spring filling cap
70	52113B	Kit holder cap for filling
71	52117B	Cap cap cap for filling
72	52114B	Screw max6 (2UD.)

NOTES